METRICA
METRology Institutional CAtalog

ISTITUTO NAZIONALE DI RICERCA METROLOGICA
Repository Istituzionale

Comparison of Low DC Current Traceability Methods and Gas Capacitors AC–DC Dependence

This is the author's submitted version of the contribution published as:

Original
Comparison of Low DC Current Traceability Methods and Gas Capacitors AC–DC Dependence / Callegaro, Luca; Cassiago, Cristina; D'Elia, Vincenzo; Gasparotto, Enrico; Enrico, Emanuele; Gotz, Martin. - In: IEEE TRANSACTIONS ON INSTRUMENTATION AND MEASUREMENT. - ISSN 0018-9456. - 70:(2021), pp. 1-6. [10.1109/TIM.2021.3053974]

Availability:
This version is available at: 11696/72976 since: 2022-02-15T10:02:00Z

Publisher:
IEEE-INST ELECTRICAL ELECTRONICS ENGINEERS INC

Published
DOI:10.1109/TIM.2021.3053974

Terms of use:

This article is made available under terms and conditions as specified in the corresponding bibliographic description in the repository

Publisher copyright
IEEE
© 20XX IEEE. Personal use of this material is permitted. Permission from IEEE must be obtained for all other uses, in any current or future media, including reprinting/republishing this material for advertising or promotional purposes, creating new collective works, for resale or redistribution to servers or lists, or reuse of any copyrighted component of this work in other works

(Article begins on next page)

26 December 2024

Comparison of low dc current traceability methods, and gas capacitors ac-dc dependence

Luca Callegaro, Cristina Cassiago, Vincenzo D'Elia,
Enrico Gasparotto, Emanuele Enrico and Martin Götz

***Abstract*—The paper compares two instruments for traceable measurement of dc low currents, a custom capacitance-voltage (C-V) source and the Ultrastable Low-Current Amplifier (ULCA), a commercial precision transresistance amplifier. The instruments are calibrated through independent traceability routes. The comparison base relative accuracy is in the $10^{-6} - 10^{-5}$ range. Differences between the two instrument readings, in the 10^{-5} range, are interpreted as an effect of the frequency dependence of the capacitor employed in the C-V source. Such frequency dependence can affect also primary metrology experiments in other fields.**

***Index Terms*—Metrology; Current measurement; Amplifiers, Gain measurement; Calibration; Capacitance.**

I. Introduction

The traceability of low dc current measurement, in the fA to pA range, is of interest in the fields of single electronics, nanotechnology, ionizing radiation measurements [1], materials science. The generation of traceable dc currents with Ohm's law method is affected by a sizeable uncertainty for currents of 1 nA or below (see [2, Fig. 4], [3, Fig. 6]). Hence, during the past two decades several national metrology institutes developed sources [2], [4]–[13] based on the capacitance-charging (C-V) method [14], where a linear voltage ramp $v(t)$ is applied to a capacitor C, generating a dc current traceable to voltage and capacitance standards.

More recently, the Physikalisch-Technische Bundesanstalt (PTB) has developed the so-called *Ultrastable-Low noise Current Amplifier* (ULCA) [3], [15]–[18], a precision dc amplifier which gain can be calibrated with a cryogenic current comparator (CCC). The amplifier can work either as a transconductance amplifier, for current measurement, and as a tranresistance amplifier, for current generation.

The C-V method and the ULCA have different advantages and drawbacks, and perform measurements with different tracebility sources, as briefly summarized in Tab. I.

In the following we report about a comparison experiment, where currents in the range 10 pA to 1 nA are generated with a C-V source and measured with an ULCA (and associated instrumentation). This paper is an extension of the proceedings paper [19].

The comparison shows relative deviations between the sourced and measured current values in the order of a few parts in 10^5. The difference is interpreted as a result of the frequency dependence of the gas-dielectric capacitors employed in the C-V source. This effect, which existence and magnitude is still under debate, is of high relevance for several experiments which realise the measurement units of charge, current, mass and force in the revised SI [20].

L. Callegaro, C. Cassiago, V D'Elia, E. Gasparotto, and E. Enrico are with the Istituto Nazionale di Ricerca Metrologica (INRIM), 10135 Torino, Italy. (e-mail: l.callegaro@inrim.it). Martin Götz is with the Physikalisch-Technische Bundesanstalt (PTB), Bundesallee 100, Braunschweig, Germany.

II. Experimental

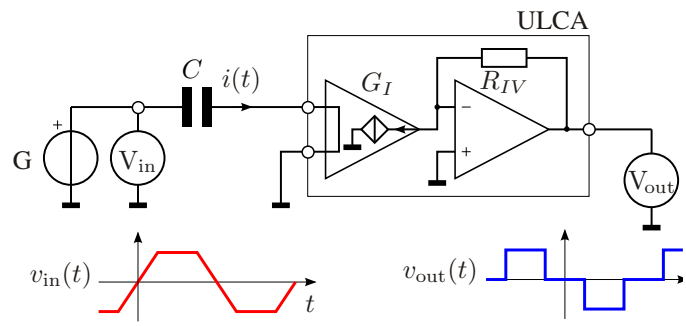

Fig. 1. Principle schematic diagram of the experiment, see Sec. II for an explanation of the symbols. The two stages of the ULCA described in Sec. II-B are shown. The waveform shapes of $v_{\rm in}(t)$ and $v_{\rm out}(t)$ are also sketched.

The experiment is outlined in Fig. 1. A more detailed schematic diagram of the instrumentation connections is shown in Fig. 2. The C-V source, extensively described in [2], [12], [13], is composed of a generator G providing a piecewise linear voltage ramp $v_{\rm in}(t) = K_v\, t$. The ramp is fed to a capacitor C, which generates a current $I = C{\rm d}v_{\rm in}(t)/{\rm d}t = C_{\rm dc}K_v$.

The ULCA A, having a transresistance gain $A_{\rm TR}$, converts the current I back to a voltage $v_{\rm out} = A_{\rm TR}I$. Both the input $v_{\rm in}(t)$ and the output voltages $v_{\rm out}(t)$ are sampled at regular time intervals by the voltmeters $\rm V_{in}$ and $\rm V_{out}$, synchronized by

TABLE I
Comparison of methods to achieve dc low current traceability.

	C-V	ULCA
Base accuracy	$> 10^{-5}$	$< 10^{-6}$
Range	fA to $\leq$ 1 nA	pA to nA
Traceability	C, V, t	R and I ratios
Calibration	cal lab instruments	CCC
Operation	only source	source and meter
Availability	home-made	commercial
Cost	moderate	high

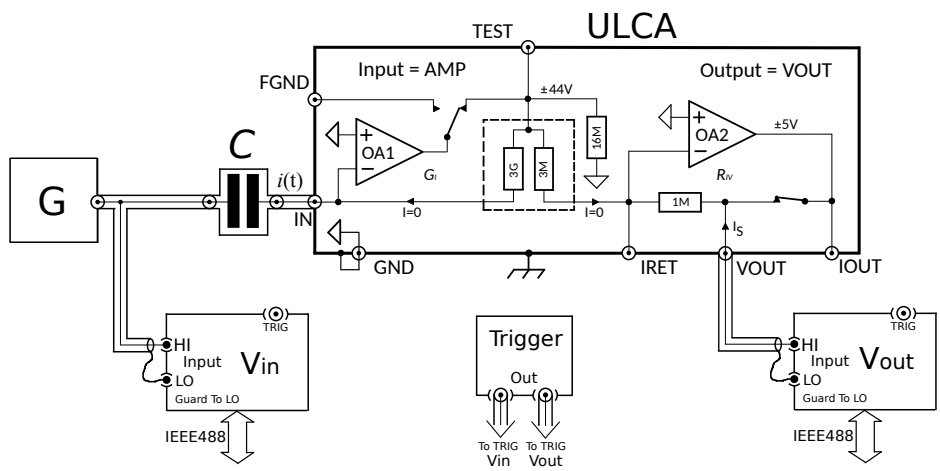

Fig. 2. Schematic diagram of the experiment corresponding to the principle diagram of Fig. 1, showing the ULCA connections. The ULCA simplified schematics is after Ref. [16], where the reader can find a detailed description of its operation and connections.

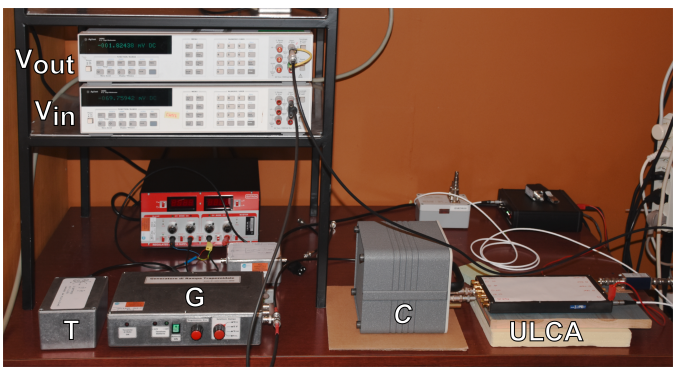

Fig. 3. A photo of the experiment. The main components are labeled as in Fig. 2.

a trigger signal source T. To reduce cable dielectric absorption effects, C and ULCA are connected directly, without using any cable, as shown in Fig. 3.

The samples are acquired through an interface bus (IEEE-488) for off-line processing; K_v is determined by the samples of $v_{\rm in}$ numerically.

The actual $v_{\rm in}(t)$ shape chosen has a symmetric trapezoidal waveform, having a period of $\approx 800\,\rm s$ and composed of three different slopes (positive, negative and zero), corresponding to three different calibration current values $+I$, $-I$ and $I = \pm 0$. The current value $I = 0$ allows to determine instrumental offsets.

Several capacitor models have been employed in the comparison. A list is given in Table II.

A. Traceability: C-V source

C is calibrated as a two-terminal pair impedance [22, Sec. 2.2] at the frequency of $1\,\rm kHz$ with an automated capacitance bridge; the measurement is traceable to the Italian national standard of capacitance and ultimately to the quantum Hall effect [23]. The period of T is measured by a frequency meter which is periodically recalibrated.

As will be apparent in Sec. III, the comparison outcome involves only ratios of the measured voltage samples $v_{\rm in}$ and $v_{\rm out}$. Therefore, no traceability to the voltage unit is required. The tracking accuracy of $v_{\rm in}$ and $v_{\rm out}$ is calibrated by direct comparison in the $10\,\rm V$ range, and by a precision voltage divider through the different voltage ranges employed.

B. Traceability: ULCA

The transresistance amplifier employed is a Magnicon mod. ULCA-1 [15]. The instrument has a highly stable transresistance gain [17] and can be calibrated with a relative uncertainty better than 10^{-7} [16].

The ULCA is composed of two stages in cascade. The input stage is a current-current amplifier, with a nominal gain $G_I^{\rm nom} = 1000$, internally realised with active components and a $1000:1$ resistance ratio ($3\,\rm G\Omega/3\,M\Omega$). The output stage is a transresistance amplifier of nominal gain $R_{IV}^{\rm nom} = 1\,\rm M\Omega$. The overall nominal gain of the amplifier is $A_{\rm TR}^{\rm nom} = G_I^{\rm nom} R_{IV}^{\rm nom} = 1\,\rm G\Omega$.

Both the input and output stages of ULCA can be calibrated by a CCC with a procedure reported in detail in [15, Sec. V], and the amplifier gain computed as the product of the gain of the two stages, $A_{\rm TR}^{\rm CCC} = G_I \cdot R_{IV}$.

The calibration of G_I, a current ratio, does not involve traceability to SI units. The calibration of R_{IV} is performed with traceability to the quantum Hall effect. Table III gives a summary of the outcome of the calibrations performed. Data from Table III was used to compute the gain error of Fig. 4. One calibration was performed at PTB and one at INRIM: the main uncertainty contribution is of type A and is different for the two calibrations, since two different CCC models have been employed (a 12-bit commercial Magnicon CCC for the INRIM calibration, a 14-bit CCC [16], [24] for the PTB one).

All values reported have been corrected for temperature, which can be read with a sensor integral with the ULCA. A comparison between the two calibrations shows that the transport and time drift of the ULCA during a period of 1.5 years is of the order of a few parts in 10^7, compatibile with previous stability tests [17].

TABLE II
THE STANDARD CAPACITORS EMPLOYED IN THE C-V SOURCE.

Label	C^{nom}	Company	Model	Serial	Year	Dielectric	Notes
GR1000	1000 pF	General Radio	1404-A	3144	1976	N_2	[21] three terminal converted to two-port, trimmer removed
ESI1000	1000 pF	Electro Scientific Industries	SC1000A	223	1982	N_2	Reconfigured as two-port. Trimmer in place
SUL100	100 pF	H. W. Sullivan	C8002	681103	1982	Air	Reconfigured as two-port. Trimmer removed

TABLE III
OUTCOME OF THE CALIBRATION OF THE TWO STAGES OF THE ULCA.

$G_I/G_I^{\mathrm{nom}}-1$	$u_{\mathrm{r}}G_I$	$R_{IV}/R_{IV}^{\mathrm{nom}}-1$	$u_{\mathrm{r}}(R_{IV})$	Date	Source
-0.63×10^{-6}	2×10^{-8}	11.03×10^{-6}	2×10^{-8}	2017.10.26	22486 PTB 17 certificate
-0.99×10^{-6}	3×10^{-7}	10.59×10^{-6}	1×10^{-7}	2019.03.05	INRIM calibration

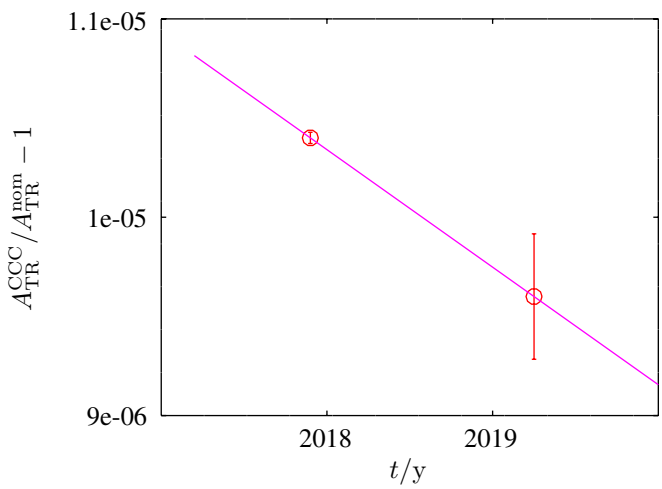

Fig. 4. The gain error $A_{\mathrm{TR}}^{\mathrm{CCC}}/A_{\mathrm{TR}}^{\mathrm{nom}}$, where $A_{\mathrm{TR}}^{\mathrm{CCC}}=G_I\times R_{IV}$. Data are taken from Table III.

The value $A_{\mathrm{TR}}=1.000\,010\,4(3)\,\mathrm{G\Omega}$ at the time of the experiment can be computed by interpolation.

III. RESULTS

Different quantities can be chosen to express the comparison outcome. In the following, we use the gain deviation

$$\delta A_{\mathrm{TR}}=\frac{A_{\mathrm{TR}}^{\mathrm{CV}}-A_{\mathrm{TR}}^{\mathrm{CCC}}}{A_{\mathrm{TR}}^{\mathrm{nom}}}, \tag{1}$$

the difference, normalized to the nominal value $A_{\mathrm{TR}}^{\mathrm{nom}}=1\,\mathrm{G\Omega}$, between $A_{\mathrm{TR}}^{\mathrm{CV}}$ (the ULCA gain calibrated with the C-V source) and $A_{\mathrm{TR}}^{\mathrm{CCC}}$.

$A_{\mathrm{TR}}^{\mathrm{CV}}$ can be expressed [13] as

$$A_{\mathrm{TR}}^{\mathrm{CV}}=\left(C\frac{1}{v_{\mathrm{out}}(t)}\frac{\mathrm{d}v_{\mathrm{in}}(t)}{\mathrm{d}t}\right)^{-1}; \tag{2}$$

Eq. (2) shows, as anticipated in Sec. II-A, that a traceability to the voltage unit is not required by the comparison.

The results of the comparison are shown in Tab. IV, which reports the measurement outcome δA_{TR} on the three capacitors of Table II versus different experimental conditions[1]. The same data are plotted in Fig. 5.

An example of uncertainty budget for δA_{TR} is reported in Tab. V; more details about the expression of the uncertainty of the C-V source can be found in [2]. The expanded ($k=2$) uncertainty $U(\delta A_{\mathrm{TR}})$, reported in Table IV and Figure 5, is for all measurements dominated by the contributions to $A_{\mathrm{TR}}^{\mathrm{CV}}$.

The comparison shows that $\delta A_{\mathrm{TR}}>0$ for the capacitors GR1000 and ESI1000, and is compatible with zero for SUL100. An interpretation of such outcome is proposed in the next Section.

IV. DISCUSSION

A. Frequency dependence of gas-dielectric capacitors

Capacitance standards are made of metallic electrodes separated by a dielectric medium. Solid- and liquid-dielectrics have a dielectric permittivity $\epsilon(f)$ dependent on the frequency f of the electric field. For low-loss dielectrics, $\epsilon(f)$ has a fractional power law shape, extending down to very low frequencies [25].

Gas dielectrics show a Debye response with relaxation frequencies in the millimetric range or beyond: $\epsilon(f)$ can be considered constant up to the GHz range [26]. Other mechanisms generating a frequency dependence in the capacitance $C(f)$ include parasitic inductances (e.g, wiring), giving a f^2 dependence, electromagnetic radiation, or eddy currents in the electrodes (showing a $f^{\frac{1}{2}}$ dependence) [27]. All these phenomena are also negligible at acoustic frequencies or below.

In addition to C-V sources, several primary metrology experiments, either purely electrical or electro-mechanical, involve capacitor elements which are conveniently measured at audio frequency but are then energized in the dc regime. Electron-counting capacitance standards (ECCS) realise the coulomb by accumulating individual electrons on a vacuum-gap cryogenic capacitor [28]. Electrostatic balances for the realisation of mass and force units in the low range (mg to ng, mN to nN) [29]–[32] involve the measured gradient $\partial C/\partial x$ versus the mechanical displacement x; setups for the

[1]The actual source voltage slope K_v is slightly lower, -5%, than the nominal one reported in Table IV, and consequently the corresponding current I^{nom}. This is to provide some margins to avoid noise clipping and therefore systematic errors when measured quantities are close to the instrumental range. The values have been rounded to decadal ones to facilitate the table reading.

TABLE IV
RESULTS OF THE COMPARISON.

C label	C^{nom}	K_v	I^{nom}	V_{out}	δA_{TR} $\times 10^6$	$U(\delta A_{\mathrm{TR}})$ $\times 10^6$
GR1000	1000 pF	$0.1\,\mathrm{V\,s^{-1}}$	100 pA	100 mV	+24.2	7.3
GR1000	1000 pF	$0.1\,\mathrm{V\,s^{-1}}$	100 pA	100 mV	+26.3	8.3
GR1000	1000 pF	$1\,\mathrm{V\,s^{-1}}$	1 nA	1 V	+22.2	8.8
ESI1000	1000 pF	$0.1\,\mathrm{V\,s^{-1}}$	100 pA	100 mV	+39.9	8.3
SUL100	100 pF	$0.1\,\mathrm{V\,s^{-1}}$	10 pA	10 mV	+6.2	24.2
SUL100	100 pF	$0.1\,\mathrm{V\,s^{-1}}$	10 pA	10 mV	−9.3	23.4
SUL100	100 pF	$1\,\mathrm{V\,s^{-1}}$	100 pA	100 mV	+12.7	45.8

TABLE V
EXAMPLE OF UNCERTAINTY BUDGET FOR δA_{TR}.

Symbol	X	$u_{\mathrm{r}}(X) \times 10^6$	
C	1000 pF	2.0	30 %
K_v	$0.1\,\mathrm{V\,s^{-1}}$	0.5	2 %
V_{out}	100 mV	1.2	10 %
T	1.048 s	1.0	8 %
noise		2.5	40 %
$A_{\mathrm{TR}}^{\mathrm{CV}}$	1 GΩ	3.6×10^{-6}	98 %
$A_{\mathrm{TR}}^{\mathrm{CCC}}$	1 GΩ	3.1×10^{-7}	2 %
δA_{TR}		3.6×10^{-6}	

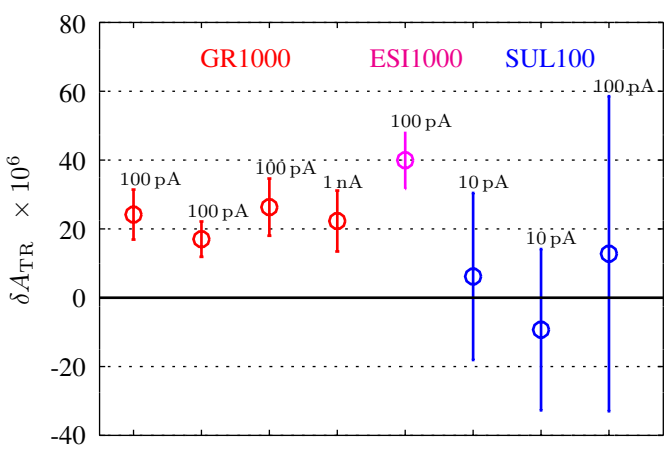

Fig. 5. The data of Table IV, displayed in graphical form.

measurement of the gravitational constant can involve [33], [34] the balancing of the gravitational force by electrostatic actuators. In all these experiments, the limited knowledge of the frequency dependence of the critical capacitive element of the experiment can become a significant uncertainty source.

Frequency dependencies in gas- or vacuum-dielectric capacitors *were* experimentally observed [35]–[39]. Giblin *et al.* [37] gave some evidence that the dc capacitance $C(0)$ may be predicted by extrapolation from several measurements performed in the in the audio frequency band.

These dependencies were ascribed to effects of dielectric films, absorbed or chemisorbed on the metallic electrode surfaces; the films act as high-value, lossy solid-dielectric capacitors in series with the gas-dielectric one.

B. An interpretation of the comparison

The calculation of the results of Tab. IV the possible dependence over frequency of C was not considered, both for the estimate and for the uncertainty (see also Tab. V).

Both the C-V source and the ULCA are ultimately traceable to the quantum Hall resistance. Equation 2 shows that the experiment can be reinterpreted as an RC comparison performed close to dc frequency.

Under this assumption, since $\delta A_{\mathrm{TR}} \ll 1$, we can write

$$\delta A_{\mathrm{TR}} = \delta C = \frac{C(0) - C(f)}{C^{\mathrm{nom}}}, \tag{3}$$

where the capacitor being employed, of nominal capacitance C^{nom}, has a near-dc capacitance $C(0)$ determined with the experiment, and a $C(f)$ capacitance measured during the C-V source calibration (Sec. II-A).

The data of Table 5 are compatible with the interpretation of a surface-layer effect (Sec. IV-A):

- $\delta C \leq 0$ for all capacitors. This is consistent with other measurements [35]–[39] and an explanation of the effect in terms of surface effects;
- δC shows no significant dependence over the maximum applied voltage V^{nom}, suggesting a linear dielectric phenomenon;
- δC is strictly positive for GR1000 and ESI1000, both having $C^{\mathrm{nom}} = 1000\,\mathrm{pF}$, and compatible with zero for SUL100, having $C^{\mathrm{nom}} = 100\,\mathrm{pF}$. The physical construction of the three capacitors is similar, but SUL100 has a much larger electrode spacing than GR1000 or ESI1000. A surface layer effect and the corresponding δC would therefore be much smaller for SUL100.

V. CONCLUSIONS

The C-V source and the ULCA both provide low-current traceability to low dc currents, and are to some extent complementary: the C-V source can easily operate also in the fA range, the ULCA has a fixed gain but provides ultimate accuracy. The comparison, performed in a current range (10 pA to 1 nA) suitable for both instruments, shows a compatibility in the 10^{-5} range, well beyond the specifications of other commercial low-current instrumentation.

The comparison outcome has been interpreted in terms of the residual frequency dependence of the gas-dielectric capacitors employed in the C-V source, which can be due to surface layer effects. This frequency dependence can be a

source of error also in electrostatic actuators employed in other primary metrology experiments, such as electrostatic balances for the realisation of SI mass and force units, and for the measurement of the gravitational constant.

References

[1] R. Fitzgerald, D. E. Bergeron, S. P. Giblin, D. G. Jarrett, S. M. Judge, C. Michotte, H. Scherer, and N. M. Zimmerman, "The next generation of current measurement for ionization chambers," *Appl. Radiation and Isotopes*, vol. 163, p. 109216, 2020.

[2] L. Callegaro, V. D'Elia, and B. Trinchera, "A current source for picoammeter calibration," *IEEE Trans. Instr. Meas.*, vol. 56, no. 4, pp. 1198–1201, Aug. 2007.

[3] D. Drung and C. Krause, "Ultrastable low-noise current amplifiers with extended range and improved accuracy," *IEEE Trans. Instr. Meas.*, vol. 66, no. 6, pp. 1425–1432, 2016.

[4] G.-D. Willenberg, H. N. Tauscher, and P. Warnecke, "A traceable precision current source for currents between 100 aA and 10 pA," *IEEE Trans. Instr. Meas.*, vol. 52, no. 2, pp. 436–439, Apr. 2003.

[5] H. van den Brom, P. de la Court, and G. Rietveld, "Accurate subpicoampere current source based on a differentiating capacitor with software-controlled nonlinearity compensation," *IEEE Trans. Instr. Meas.*, vol. 54, no. 2, pp. 554–558, Apr. 2005.

[6] L. Callegaro, V. D'Elia, P. P. Capra, and A. Sosso, "Techniques for traceable measurements of small currents," *IEEE Trans. Instr. Meas.*, vol. 56, no. 2, pp. 295–299, Apr. 2007.

[7] N. E. Fletcher, S. P. Giblin, J. M. Williams, and K. J. Lines, "New capability for generating and measuring small DC currents at NPL," *IEEE Trans. Instr. Meas.*, vol. 56, no. 2, pp. 326–330, Apr. 2007.

[8] I. Iisakka, K. Kalliomäki, J. Seppälä, and A. Manninen, "Subpicoampere current source based on a digital-to-analog converter," in *Conference on Precision Electromagnetic Measurements (CPEM) Digest*, Broomfield, CO, USA, Jun 8-13 2008, pp. 352–353.

[9] G.-D. Willenberg and H. N. Tauscher, "Novel digital voltage ramp generator for use in precision current sources in the picoampere range," *IEEE Trans. Instr. Meas.*, vol. 58, no. 4, pp. 756–760, Apr. 2009.

[10] T. Bergsten, K.-E. Rydler, O. Gunnarsson, G. Eklund, and V. Tarasso, "A precision current source using $\Delta-\Sigma$ modulation," *IEEE Trans. Instr. Meas.*, vol. 60, no. 7, pp. 2341–2346, July 2011.

[11] D. Lee and Y. Chau, "Automatic calibration of DC low level current at SCL," in *Conference on Precision Electromagnetic Measurements (CPEM) Digest*, Jul. 2012, pp. 164 –165.

[12] L. Callegaro, P. P. Capra, V. D'Elia, and F. Galliana, "Generation of reference DC currents at 1 nA level with the capacitance charging method," *IEEE Trans. Instr. Meas.*, vol. 63, no. 7, pp. 1779–1782, Jul. 2014.

[13] I. Finardi and L. Callegaro, "Calibration setup for ultralow-current transresistance amplifiers," *IEEE Trans. Instr. Meas.*, vol. 67, no. 11, pp. 2676–2683, Nov 2018.

[14] T. B. Rozhdestvenskaya, D. I. Antonova, O. M. Pavlov, L. M. Stepanova, O. V. Saks, V. S. Grafov, V. A. Matrosov, and A. V. Pokrovskaya, "New methods and standard equipment fo the metrological assurance of insrumentation for measurements of extremely low d.c. currents," in *Proceedings of the 8th IMEKO Congress of the International Measurement Confederation*, ser. Measurement for progress in science and technology, G. Striker, J. Solt, and T. Kemeny, Eds., vol. Acta IMEKO 1979, IMEKO. North-Holland USSR, 21-27 May 1980, pp. 751–756.

[15] D. Drung, C. Krause, U. Becker, H. Scherer, and F. Ahlers, "Ultrastable low-noise current amplifier: A novel device for measuring small electric currents with high accuracy," *Rev. of Sci. Instrum.*, vol. 86, no. 2, p. 024703, 2015.

[16] D. Drung, M. Götz, E. Pesel, and H. Scherer, "Improving the traceable measurement and generation of small direct currents," *IEEE Trans. Instrum. Meas.*, vol. 64, no. 11, pp. 3021–3030, 2015.

[17] D. Drung, C. Krause, S. P. Giblin, S. Djordjevic, F. Piquemal, O. Séron, F. Rengnez, M. Götz, E. Pesel, and H. Scherer, "Validation of the ultrastable low-noise current amplifier as travelling standard for small direct currents," *Metrologia*, vol. 52, no. 6, p. 756, 2015.

[18] C. Krause, D. Drung, and H. Scherer, "Measurement of sub-picoampere direct currents with uncertainties below ten attoamperes," *Rev. Sci. Instrum.*, vol. 88, no. 024711, pp. 024 711–1–024 711–8, 2017.

[19] L. Callegaro, C. Cassiago, V. D'Elia, E. Enrico, E. Gasparotto, I. Finardi, and M. Götz, "Comparison between two dc low current traceability chains," in *Conference on Precision Electromagnetic Measurements CPEM 2020*, Denver, CO, USA, Aug 2020.

[20] Bureau International des Poids et Mesures, "The International System of Units," May 20 2019, 9th SI Brochure. [Online]. Available: www.bipm.org

[21] J. Hersh, "A highly stable reference standard capacitor," *General Radio Experim.*, vol. 37, no. 8, pp. 1–8, 1963.

[22] L. Callegaro, *Electrical impedance: principles, measurement, and applications*, ser. in Sensors. Boca Raton, FL, USA: CRC press: Taylor & Francis, 2013, iSBN: 978-1-43-984910-1.

[23] L. Callegaro, V. D'Elia, and B. Trinchera, "Realization of the farad from the dc quantum Hall effect with digitally assisted impedance bridges," *Metrologia*, vol. 47, pp. 464–472, 2010.

[24] M. Götz, E. Pesel, and D. Drung, "A compact 14-bit cryogenic current comparator," in *29th Conference on Precision Electromagnetic Measurements (CPEM 2014)*, Rio de Janeiro, Brazil, Aug 24-29 2014, pp. 684–685.

[25] A. K. Jonscher, "The universal dielectric response," *Nature*, vol. 267, pp. 673–679, 23 Jun 1977.

[26] J. V. Hughes and H. L. Armstrong, "The dielectric constant of dry air," *J. Appl. Phys.*, vol. 23, no. 5, pp. 501–504, 1952.

[27] L. Callegaro, "The metrology of electrical impedance at high frequency: a review," *Meas: Sci. Technol*, vol. 20, no. 2, p. 022002, dec 2008.

[28] M. W. Keller, N. M. Zimmerman, and A. L. Eichenberger, "Uncertainty budget for the NIST electron counting capacitance standard, ECCS-1," *Metrologia*, vol. 44, no. 6, p. 505, 2007.

[29] G. A. Shaw, J. Stirling, J. A. Kramar, A. Moses, P. Abbott, R. Steiner, A. Koffman, J. R. Pratt, and Z. J. Kubarych, "Milligram mass metrology using an electrostatic force balance," *Metrologia*, vol. 53, no. 5, p. A86, 2016, The effect of capacitance frequency dependence is considered in the Supplementary Material.

[30] J. Stirling and G. A. Shaw, "Realising traceable electrostatic forces despite non-linear balance motion," *Meas. Sci. Technol.*, vol. 28, no. 5, p. 055003, mar 2017.

[31] Y. Yamamoto, K. Fujita, and K. Fujii, "SI traceable small mass measurement using the voltage balance apparatus at NMIJ," in *2018 Conference on Precision Electromagnetic Measurements (CPEM 2018)*. IEEE, 2018, pp. 1–2.

[32] M. Pisani, A. Malengo, M. Santiano, F. Saba, and D. Torchio, "A simple electrostatic balance for the milligram range," *IEEE Trans. Instr. Meas.*, vol. 68, no. 6, pp. 2223–2228, 2019.

[33] T. R. Armstrong and M. P. Fitzgerald, "New measurements of G using the measurement standards laboratory torsion balance," *Phys. Rev. Lett.*, vol. 91, p. 201101, Nov 2003.

[34] W. Michaelis, J. Melcher, and H. Haars, "Supplementary investigations to PTBs evaluation of G," *Metrologia*, vol. 41, no. 6, pp. L29–L32, oct 2004.

[35] B. D. Inglis, "Frequency dependence of electrode surface effects in parallel-plate capacitors," *IEEE Trans. Instr. Meas.*, vol. 24, pp. 133–150, Jun 1975.

[36] V. Bego, J. Butorac, and G. Gašljević, "Measurement of electrode surface effects in air capacitors using a precise coulombmeter," *IEEE Trans. Instr. Meas.*, vol. 38, no. 2, pp. 378 –380, apr 1989.

[37] S. P. Giblin, G. D. Willenberg, and N. E. Fletcher, "Frequency dependence of gas-dielectric capacitors used in sub-nA reference current generators," in *Conference on Precision Electromagnetic Measurements (CPEM) Digest*, Daejeon, Korea, Jun 13-18 2010, pp. 318–319.

[38] G. Rietveld and H. E. van den Brom, "DC and low-frequency humidity dependence of a 20 pf air-gap capacitor," *IEEE Trans. Instr. Meas.*, vol. 58, no. 4, pp. 967–972, Apr. 2009.

[39] G. Rietveld, N. Zimmerman, and H. van den Brom, "First experimental results of the frequency dependence of a vacuum-gap capacitor between 1 kHz and 0.02 Hz," in *Conference on Precision Electromagnetic Measurements (CPEM) Digest*, Jul. 2012, pp. 708 –709.