有关定制数据跳线长度的说明

根据ANSI/TIA-568-C.2国际标准有关信道传输性能的相关规定（如右图所示）：

1、Channel通道的总长度不能超过100米；

2、永久链路的部分【B (CP转接点到TO)+C】的总长度之和不能超过90米；

3、用户端跳线和管理端跳线【A (用户端跳线)+D (双配架管理跳线) +E (设备端跳线)】的总长度之和不能超过10米。

注：如果永久链路（B+C）部分不到90米时，则跳线的总长还可以适当延长，但需要根据不同规格线缆的降级系数(de-rating factor)，由公式计算获得。

ANSI/TIA-568-C.2

6.2 Channel transmission performance

This clause contains the transmission performance specifications for balanced twisted-pair channels. The channel test configuration is illustrated in figure 3. See Annex J for worst case modeling configurations.

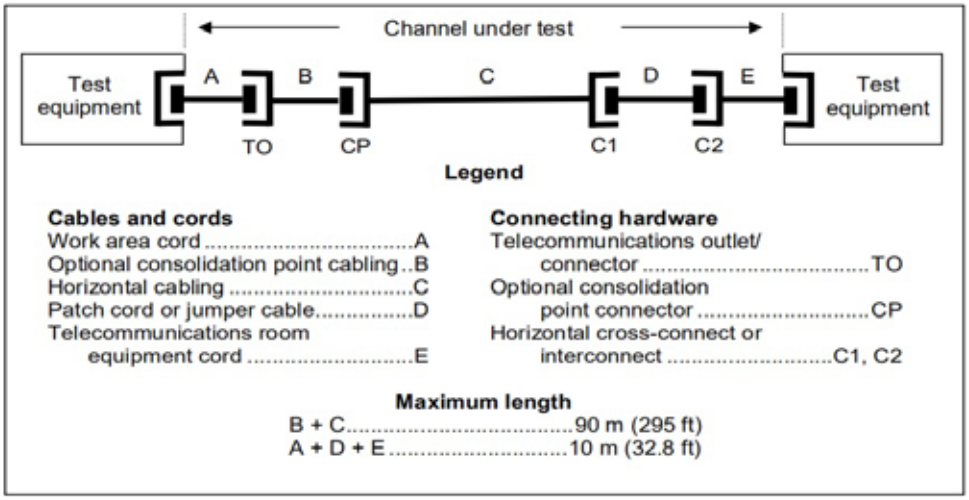

Figure 3 - Supplemental schematic representation of a channel test configuration

ANSI/TIA-568-C.2

6.6.3 Insertion loss

Cord cable insertion loss limits are derived by multiplying the applicable horizontal cable insertion loss requirements in clause 6.4.7 by a factor of 1.2 (the de-rating factor). The de-rating factor is to allow a 20% increase in insertion loss for stranded construction and design differences. An insertion loss de-rating factor of 1.5 for cord cable is allowed with the appropriate length adjustment such that the combined length of equipment cords, patch cords, and work area cords that use 50% insertion loss de-rating (e.g. cables with twisted-pairs having 26 AWG conductors) shall not be greater than 8.0 m (25.7 ft).

The maximum insertion loss for UTP cord cables shall be adjusted at elevated temperatures using a factor of 0.4 % increase per ℃ from 20 ℃ to 40 ℃ and 0.6% increase per ℃ for temperatures from 40 ℃ to 60 ℃. The maximum insertion loss for sc reened cord cables shall be adjusted at elevated temperatures using a factor of 0.2% increase per ℃ from 20 ℃ to 60 ℃. See Annex G for additional information on cable installation in higher temperature environments.

Cord cable insertion loss shall meet or be less than the values determined using the equations shown in Table 81 for all specified frequencies. In addition, category 6 and 6A cord cable insertion loss shall also be verified at temperatures of 40 ± 3 ℃ and 60 ± 3 ℃ and shall meet the requirements of Table 81 af ter adjusting for temperature.

依据ANSI/TIA-568-C.2标准6.6.3 Insertion loss（插入损耗）的规定（详见左图）：

1、23~24AWG线缆的降级系数de-rating factor是**1.2**；

2、26AWG线缆的降级系数de-rating factor是**1.5**。

附：除线规不同所导致的降级，其实还有诸如环境温度的影响等等，故跳线的长度需要视具体情况而定，没有一个绝对的数字。

ANSI/TIA-568-C.2 calculates a maximum cord length(C) for a given horizontal cable lenth (H) using a fractional de-rating factor (D).

通过跳线长度公式【**C≤(102-H) / D)**】计算（详见右表），

1、23~24awg规格线缆跳线的总长度不能超过85米 (H=0米)；

2、26awg规格线缆跳线的总长度不能超过68米 (H=0米)。

附：通过公式计算获得的跳线总长度还是比较长的，然而在实际的使用工程中，受加工工艺、环境温度等因素的影响，我们建议：

1、23~24awg规格跳线的长度控制在30米以内；

2、26awg规格跳线的长度控制在20米以内；

3、28awg规格跳线的长度不要超过10米（5米以内最佳）。

4、跳线长度越长性能越差、越不稳定，故严禁定制长度超标的跳线，除非用户明确只需要保证通断就行。

5、Fluke等测试仪对跳线测试的最短极限是50cm（再短无法单体识别），从定制角度考量，跳线最短极限为20cm。

TIA de-rating from horizontal length (H)

C ≤ (102-H) / D

	24AWG	26AWG
H	D=1.2	D=1.5
90.0	10.0	8.0
80.0	18.3	14.7
70.0	26.7	21.3
60.0	35.0	28.0
50.0	43.3	34.7
40.0	51.7	41.3
30.0	60.0	48.0
20.0	68.3	54.7
10.0	76.7	61.3
0.0	85.0	68.0