全国统一服务热线 / Service Hotline: 400 999 8747

提供最有竞争力的传动解决方案和服务，持续为客户创造最大价值！
We always provide the most competitive drive solutions and services, continue to create the maximum value for customers!

众钧传动
ZHONGJUN TRANSMISSION

山东众钧机电设备技术有限公司
SHANDONG ZHONGJUN ELECTROMECHANICAL EQUIPMENT TECHNOLOGY CO., LTD.

地址: 中国・山东 淄博高新技术开发区裕民路268号
No.268, Yumin Road, High-Tech Zone, Zibo City, Shandong, China.
电话/TEL: 0086-0533-7747888
传真/FAX: 0086-0533-7868118
网址/Http: //www.sdzhongjun.com
邮箱/E-mail: ZJ6288168@126.COM
全国统一服务热线/Service Hotline: 400 999 8747

杭州办事处 Hangzhou Office
地址: 杭州市余杭区未来科技城杭师大科技园E座1302
1302 Building E, Hangzhou Normal University Science Park, Future Science and Technology City, Yuhang District, Hangzhou
电话/TEL: 0086-0571-87386872
0-18806770015
传真/FAX: 0086-0571-87386872
网址/Http: //www.sdzhongjun.com
邮箱/E-mail: ZJ6288168@126.COM

郑州办事处 Zhengzhou Office
地址: 郑州市高新区玉兰街16号龙汇国际
Longhui Interational, No.16, Yulan Sterrt, High-tech Zone, Zhengzhou
电话/TEL: 0086-0371-63294858 55059702
0-13587578799
网址/Http: //www.sdzhongjun.com
邮箱/E-mail: ZJ6288168@126.COM

湖南办事处 Hunan Office
地址: 湖南省长沙市芙蓉区张公岭龟山路410号
No.410, Guishan Road, Zhanggongling, Furong District, Changsha, Hunan
电话/TEL: 0086-0731-83108109
0-13508475546
网址/Http: //www.sdzhongjun.com
邮箱/E-mail: ZJ6288168@126.COM

西安办事处 Xi'an Office:
地址: 陕西省西安市未央区凤城五路雅荷春天4号楼0101室
Room 0101, building 4, Yahe spring, Fengcheng 5th Road, Weiyang District, Xi'an City, Shaanxi Province
电话/Tel: 0086-029-86516086
0-18615159266
网址/Http: //www.sdzhongjun.com
邮箱/E-mail: ZJ6288168@126.COM

四川办事处 Sichuan Office:
地址: 成都市青羊区家园路八号大地新光华广场A1区1325室
Room 1325, Dadi new Guanghua Plaza A1, No.8 Jiayuan Road, Qingyang District, Chengdu
电话/TEL: 0086-028-85973641
0-13561647626
网址/Http: //www.sdzhongjun.com
邮箱/E-mail: ZJ6288168@126.COM

上海办事处 Shanghai Office:
地址: 上海市嘉定区博园路1333号1号楼1227室
Room 1227, building 1, no.1333 Boyuan Road, Jiading District, Shanghai
电话/TEL: 0086-021-59557156
0-15269364636
网址/Http: //www.sdzhongjun.com
邮箱/E-mail: ZJ6288168@126.COM

生产基地：浙江温州
Production base: Wenzhou, Zhejiang

众钧传动 ZHONGJUN TRANSMISSION

H/B工业齿轮箱 行星齿轮减速机选型手册

众钧传动
ZHONGJUN TRANSMISSION

H/B GEAR UNITS
P SERIES PLANETARY
GEARBOX

H/B工业齿轮箱
P系列行星齿轮减速机

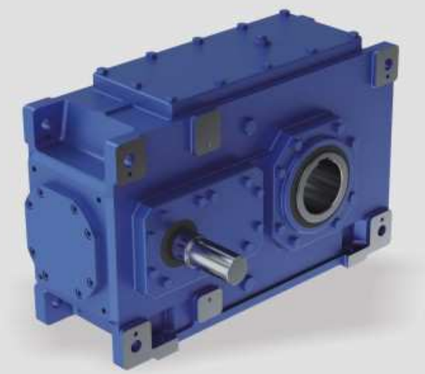

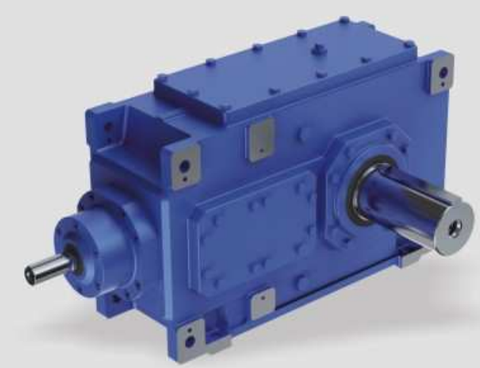

山东众钧机电设备技术有限公司
Shandong Zhongjun Electromechanical Equipment Technology Co., Ltd.

众钧传动
ZHONGJUN TRANSMISSION

企业简介 Company

山东众钧机电设备技术有限公司是一家集产品研发、技术服务、生产经营为一体的专业传动科技型企业。致力于提供更有更有竞争力的传动解决方案和服务，为客户创造更大的价值！

公司主要产品有R、S、K、F四大系列硬齿面减速机，RV/WP系列蜗轮蜗杆减速机，UD/MB系列无级减速机，P系列精密行星减速机，H/B系列大功率减速机，C/G系列齿轮马达及SWL系列丝杆升降机等。产品广泛应用于环保设备、筑路机械、仓储物流，食品机械、印刷包装、汽车检测，立体车库、石油化工、冶金、陶瓷、玻璃、印染纺织、木工机械等传动设备的各个行业。

围绕“品质至上、服务为先”的战略方针，认真贯彻执行ISO9001-2000国际质量认证体系，核心产品自主研发并获得多项“国家知识产权局”授予的专利称号，部分产品已列入省技术创新计划项目之中。公司与多家科研机构建立战略合作，并列入“山东理工大学”教学科研实习基地。2012年取得了企业自营进出口权，产品远销欧美、东南亚等国家和地区。

“众钧”自创立至今始终遵循“诚信、专业、高效、共赢”的科学的管理和服务理念，真诚期待与您共同携手，开拓美好科技未来。

Shandong Zhongjun Electromechanical Equipment Technology Co., Ltd. is a professional transmission technology enterprise integrating product research and development, technical service, production and operation. Committed to providing more competitive transmission solutions and services, to create greater value for customers!

The company's main products are R, S, K, F series geared motor, RV/WP series worm gear reducer, UD/MB series stepless reducer, P series precision planetary reducer, H/B series high-power reducer, C/G series gear motor and SWL series screw elevator. Products are widely used in environmental protection equipment, road building machinery, storage and logistics, food machinery, printing and packaging, automotive testing, three-dimensional garage, petrochemical, metallurgy, ceramics, glass, printing and dyeing textile, woodworking machinery and other transmission equipment industries.

Around the strategic policy of "quality first, service first", we earnestly implement the ISO 9001-2000 international quality certification system. The core products are independently developed and awarded many patent titles by the State Intellectual Property Office. Some of the products have been listed in the provincial technical innovation program. The company has established strategic cooperation with several scientific research institutions and has been listed as the teaching and scientific research practice base of Shandong University of Technology. In 2012, the company gained the right to import and export businesses, and its products were exported to Europe and America, Southeast Asia and other countries and regions.

Since its founding, "Zhongjun" has always followed the scientific management and service concept of "honesty, professionalism, efficiency and win-win" and sincerely looks forward to working with you to open up a bright future of science and technology.

实用新型专利证书与控制系统软件著作权证书
Utility model patent certificate and control system software copyright certificate

CORPORATE CONCEPT

诚：推心置腹，言而有信；精诚所至，始终如一；
志：志不立，天下无可成之事；有志者，事竟成；
恒：锲而不舍，金石可镂；欲稍得成，从恒下手；
专：凡为一事，事皆贵专；以专而精，以纷而散；
实：实事求是，精益求精，差之毫厘，失之千里；
勤：刻苦求进，勤学善思；懒惰误己，勤奋兴财；

Sincerity: Put your heart in your mouth, believe in your words, and be honest and consistent.

Ambition: Nothing can be done without ambition; if there is a will, there will be competition.

Eternal: Perseverance, stone can be carved; want to get a little bit, from constant hands.

Profession: Everything is for the sake of one thing; it is specialized and refined, and scattered in different ways.

Pragmatism: Seeking truth from facts, strives for perfection, and makes a difference.

Industrious: Diligently seeking progress, diligent learning and good thinking; laziness and wrong self, diligence and prosperity.

产品介绍
Product introduction

R、S、K、F系列斜齿轮减速电机 R,S,K,F series helical gear motors

R系列斜齿轮减速电机
R series helical geared motor

S系列斜齿轮-蜗轮蜗杆减速电机
S series helical-worm geared motor

K系列斜齿轮-伞齿轮减速电机
K series helical-bevel geared motor

F系列平行轴-斜齿轮减速电机
F series parallel shaft-helical geared motor

通用减速机系列 General reducer series	
安装方式：底角，法兰，扭力臂。 **Mounting arrangements:** foot, flange, torque arm.	
功率 Power(KW)	0.12-200
速比 Ratio	1.3-33000
最大输出扭矩 Output torque(KN.M)	top to 50

HB系列重载齿轮箱 HB series heavy duty gearboxes

H系列斜齿轮减速机
H seies helical gearbox

B系列斜齿轮-锥齿轮减速机
B series bevel-helical gearbox

通用减速机系列 General reducer series.	
模块化设计，安装方式多样。可配置逆止器单向传动，以及串联辅助传动。 Highly standard modular designed. No strict limitation to the mounting arrangement. Can be configured to one-way transmission by backstop. Available to install with auxiliary drive.	
功率 Power(KW)	4-6000
速比 Ratio	1.25-450
最大输出扭矩 Output torque(KN.M)	top to 950

产品介绍
Product introduction

重载行星减速机 Heavy duty planetary reducers

N系列行星减速机
N series planetary reducer

P系列行星减速机
P series planetary reducer

通用减速机系列 General reducer series	
单位承载能力极高。 Very high unit capacity.	
功率 Power(KW)	0.37–12000
速比 Ratio	25–4000
最大输出扭矩 Output torque(KN.M)	top to 2600

橡塑行业专用减速机 Special reducers for rubber and plastic industry

单螺杆挤出机减速机
Special reducer for single screw extruder

压延机专用减速机
Special reducer for calendaring machine

平双螺杆挤出机减速机
Special reducer for twin screws extruder

密炼机专用减速机
Special reducer for internal mixer

专用减速机系列 Special reducer series.	
常用于橡塑行业炼胶，挤出，压延设备。 Commonly used in rubber mixer, extruder, calendaring machine of rubber and plastic industry.	
功率 Power(KW)	55–2500
速比 Ratio	8–35
最大输出扭矩 Output torque(KN.M)	top to 300

蜗轮蜗杆减速机 Worm gear motors

RV系列蜗轮减速电机
RV series worm gear motor

VF系列蜗轮减速电机
VF series worm gear motor

WP系列蜗轮减速电机
WP series worm gear motor

UD系列无极变速器
UD series variable speed machine

T系列螺旋伞齿轮转向箱
T series spiral bevel gear reducer

SWL系列蜗轮丝杆升降机
SWL series worm gear screw reducer

通用减速机系列 General reducer series	
铝合金壳体的蜗轮传动减速机。 结构紧凑，多方位安装，免维护。 Aluminum alloy shell, compact structure, multiple installation, maintenance free.	
功率 Power(KW)	0.06–15
速比 Ratio	7.5–100
最大输出扭矩 Output torque(N.M)	top to 1760

摆线针轮减速电机 Cycloidal pinwheel reducers

BWD系列摆线减速电机
BWD series cycloidal pinwheel reducer

BLD系列摆线减速电机
BLD series cycloidal pinwheel reducer

卧式微型摆线减速电机
Horizontal micro cycloidal pinwheel reducer

立式微型摆线减速电机
Vertical micro cycloidal pinwheel reducer

通用减速机系列 General reducer series	
结构紧凑，通过摆线针轮传递动力。 Compact structure. Cycloidal pinwheel transmission.	
功率 Power(KW)	0.12–90
速比 Ratio	7–650000
最大输出扭矩 Output torque(KN.M)	top to 30

圆柱齿轮减速机 Cylindrical gear reducers

ZDY系列圆柱齿轮减速机
ZDY series cylindrical gear reducer

ZLY系列圆柱齿轮减速机
ZLY series cylindrical gear reducer

ZSY系列圆柱齿轮减速机
ZSY series cylindrical gear reducer

ZFY系列圆柱齿轮减速机
ZFY series cylindrical gear reducer

通用减速机系列 General reducer series	
按行业标准生产，并可配置逆止器单向传动以及串联辅助传动。 Can be configured to one-way transmission by backstop. Available to install with auxiliary drive.	
功率 Power(KW)	1.1–6000
速比 Ratio	1.25–500
最大输出扭矩 Output torque(KN.M)	top to 520

产品介绍
Product introduction

三项异步电机 Three-phase asynchronous motors

YE2系列高效电机
YE2 series high efficiency motor

YBX3系列防爆电机
YBX3 series premium efficiency flameproof motor

YEJ系列制动电机
YEJ series braking motor

YVF2系列变频电机
YVF2 series variable frequency motor

通用电动机系列 General motor series	
常规工业动力。 Conventional industrial power.	
功率 Power(KW)	0.12–315
机座号 Stand No.	63–355
电源频率(Hz) Power frequency	50/60

微小型减速电机 Micro and small gear motors

CH系列减速电机
CH series gear motor

CV系列减速电机
CV series gear moto

直流减速电机
Direct current gear motor

精密行星减速机
High precision planetary reducer

通用减速机系列 General reducer series	
质量轻，噪音低，效率高，寿命长等。 Light weight, low noise, high efficiency, long life etc.	
功率 Power(KW)	0.006–7.5
速比 Ratio	2–200
最大输出扭矩 Output torque(N.M)	top to 7400

产品介绍
Product introduction

双轴桨叶式混合机专用减速机 Special reducer for twin shafts paddle mixe

双轴桨叶式混合机专用减速机
Special reducer for twin shafts paddle mixer

双轴桨叶式混合机
Twin shafts paddle mixer

专用减速机系列 Special reducer series.	
该款减速机专为双轴桨叶式混合机设计，减速机与混合机直联，最大程度的节省了安装空间和生产成本，因而设备运行更加平稳，高效。 The reducer is designed for twin shafts paddle mixer, connect with the mixer directly, saving the installation space and production cost at maximum degree, so the equipment runs more smoothly and efficiently.	
功率 Power(KW)	15–90
速比 Ratio	33–50
最大输出扭矩 Output torque(KN.M)	70

焊接滚轮架专用减速机 Special reducer for welding rotator

焊接滚轮架专用减速机
Special reducer for welding rotator

焊接滚轮架
Welding rotator

专用减速机系列 Special reducer series	
适用于自调式双驱动滚轮架，移动式焊接滚轮架等各种自动焊接的滚轮架驱动。 The reducers apply to bolt adjustable rotator, self aligning rotator, lead screw adjustable rotator, and fit up rotator, etc.	
功率 Power(KW)	0.18–22
速比 Ratio	300–3400
最大输出扭矩 Output torque(KN.M)	180

产品图片
Product Pictures

齿轮箱 Gear Units
目录 Contents

工业齿轮箱 Industrial gear units

齿轮箱 Gear Units
基本类型概括 Summary of Basic Types

卧式安装	Horizontal mounting position
平行轴齿轮箱 类型 H1...,H2...,H3,...,H4... 1-...4-级传动，iN=1.25-450	Helical gear units Types H1...,H2...,H3,...,H4... 1-...4-stage，iN=1.25-450

H.SH

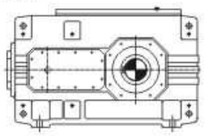

H.HH

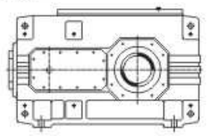

H.DH

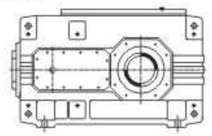

H.HM,H.DM

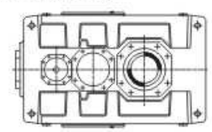

直交轴齿轮箱	Bevel-helical gear units
类型 B2...,B3...,B4... 2-...4-级传动， iN=5-400	Types B2...,B3...,B4... 2-...4-stage， iN=5-400

B.SH

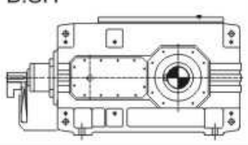

B.HH

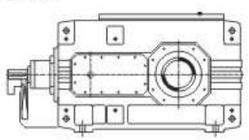

B.DH

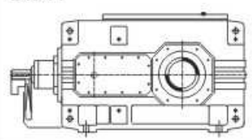

B.HM,B.DM

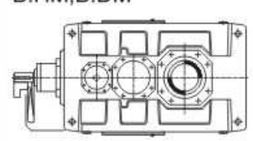

立式安装	Vertical mounting position
平行轴齿轮箱 类型 H2.V,H3.V,H4.V 2-...4-级传动，iN=6.3-450	Helical gear units Types H2.V,H3.V,H4.V 2-...4-stage，iN=6.3-450

H.SV

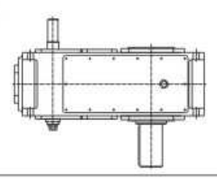

H.HV

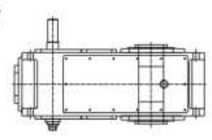

H.DV

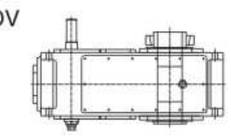

直交轴齿轮箱	Bevle-helical gear units
类型 B2.V,B3.V,B4.V 2-...4-级传动， iN=5-400	Types B2.V,B3.V,B4.V 2-...4-stage， iN=5-400

B.SV

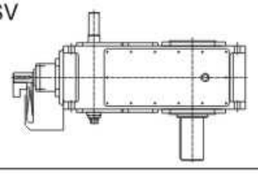

B.HV

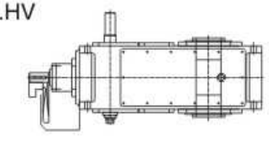

B.DV

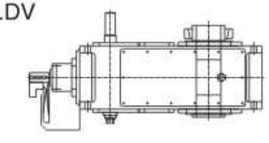

齿轮箱 Gear Units
性能特点 Characteristic

平行轴齿轮箱 Helical Gear Units
直交轴齿轮箱 Bevel-helical Gear Units

- H/B齿轮箱有3~26型规格，传动级数1~4级，速比1.25~450，产品组合能力强，与R、K、S系列组合可得到更大的速比；
- H/B采用高度的模块化设计方案，互换程度高，衍生出适合不同应用的需要；交货期短；
- 实现平行轴、直交轴、立式、卧式通用箱体，零部件种类减少、规格型号增加；
- 输入方式可采用电机联接法兰、轴输入；输出方式多样化；
- 优质高纯度合金钢齿轮采用精密渗碳磨削，抗冲击能力强，修形修向提高承载力、降温、降噪等性能；
- 高强度灰铸铁箱体，高精度数控加工；水平剖分式箱体，适应各种出轴及安装方式，维护方便；
- 氟橡胶油封密封，完善的防漏油性能；
- 丰富的可选附件（冷却风扇、冷却盘管、油泵、电机底座，扭力臂等）；
- 可按客户需求变型为各种行业专用产品。

- H/B gear units contain 3~26 types with detailed specifications, stages 1~4, retio 1.25-450. It can be combined with R, K and S series products in order to achieve higher ratio.
- Because of high modularization, H/B series is highly exchangeable and flexible, shbrt delivery time.
- Generality gear box for parallel shafts, straight shafts, vertical and horizontal using which can reduce parts' s type and increase models.
- Input mode can be shaft input or flange input, various output style.
- Gears made by high purity alloy steel are in precise carburizing grinding, strong impact resistance. modification leading to improvement of loading capacity, cooling and quiet. running ate.
- Housing made by high strength cast iron are processed by precision CNC machine tools, gear box with split casting can be used in various shafts. installed and maintained easily.
- Fluorine rubber oil seal has excellent anti-leakage performance.
- Optional accessories (fan, cooling coil, oil pump, motor base, torque arm and etc.) are offered for various professional fields and industry according to customer demands.
- We can make cutorn gear units according to customers' s requires.

齿轮箱 Gear Units
一般说明 General Informations

注意事项
应严格遵守以下各项：

- 样本中的附图只属范例，并不要求严格一致，所注尺寸可以有所变动。
- 所注重量仅为平均值，并不要求严格一致。
- 为防止发生事故，所有旋转部件均应根据国家和当地安全规定加罩防护。
- 试车之前，必须认真阅读设备操作说明书。减速机供货时已作好运行准备，只是未加润滑油。
- 此处给出的加油量只作为参考值。实际油量以油标上的标记为准。
- 润滑油粘度须以减速机铭牌上的数值为准。
- 减速机供货时带径向轴封。用户如有特别要求，可提供其它形式的密封装置。
- 转动方向是指输出轴d_2的方向。

Attention:
The following items are absolutely to be observed:

- Illustrations are examples only and are not strictly binding, Dimensions are subject to change
- The weights are mean values and not strictly binding.
- To prevent accidents, all rotating parts should be guarded according to local and national safety regulations.
- Prior to commissioning, the operating instructions must be observed. The reductors are delivered ready for
- operation but without oil filling.
- Oil quantities given are guide values only. The exact quantity of oil depends on the marks on the oildipstick.
- The oil viscosity has to correspond to the data given on the name plate.
- The reductors are supplied with radial shaft seals. Other sealing variants on request.
- Directions of rotation referring to output shaft d_2.

在标注尺寸的图纸上使用的符号说明如下：
Explanation of symbols used in the dimensioned drawings:

= 油 尺 Oil dipstick
= 通气孔 Breather
= 放油孔 Oil drain
= 加油孔 Oil filler

规格13号以上减速机箱体地脚上配有千斤顶螺丝，箱盖上配有调平面。
From size 13 up jack screws in the housing feet, and leveling pads on the upper housing part.
基础螺栓的最低性能等级为8.8级
Foundation bolts of min, property class 8.8.

齿轮箱 Gear Units
型号表示方法 Designation of Types

齿轮箱 Gear Units
选型指南 Guidelines for the selection

1.确定齿轮箱的类型及规格 1.Determination of gear unit type and size	1.1 计算传动比 Find the tranasmission ratio $i_s = \frac{n_1}{n_2}$ 1.2 确定齿轮箱的额定功率 Determine nominal power rating of the gear unit $P_N \geqslant P_2 \times f_1 \times f_2 \times S_A$ 如果不满足下列条件，请向我们咨询 It is not necessary to consult us, if: $3.33 \times P_2 \geqslant P_N$ 1.3 校核最大扭矩，如峰值工作扭矩、起动扭矩或制动扭矩，看其是否满足要求 1.3 Check for maximum torque, e.g. peak operating–, starting –or braking torque $P_n \geqslant \frac{T_A \times n_1}{9550} \times f_3$ 齿轮箱的规格和传动级数列在额定功率选型表中，可根据i_N和P_N确定。 Gear unit sizes and number of reduction stages are given i_N rating tables depending on in and P_N. 1.4 检查输出轴上是否允许有附加载荷：见43–44页 1.4 Check whether additional forces on the output shaft are permissible; see pages 43–44 1.5 根据35–38页上的表检查实际传动比是否满足要求 1.5 Check whether the actual ratio i as per table on pages 35–38 is acceptable	
	安装方式 Mounting position	
	卧式安装 Horzontal	立式安装 Vertical
2.确定润滑方式 2.Lubrication method to determine	所有需要润滑的零部件均浸在润滑油中，或采用飞溅润滑方式，也可按用户要求提供强制润滑方式。 All parts to be lubricated are lying in the oil or are splash lubricated Forced lubricated on request	可选润滑油供给方式： ––浸油润滑 ––通过法兰联接泵或电动泵进行强制润滑。有关合适的供油方式和选择标准，参见105–112页。 Possible oil supply variations: –Dip lubrication –Forced lubrication by means of flanged–onpump or motor pump. For preferred variants and critena fo selection, page 105–112.
3. 确定冷却方式 3. Sure cooling way	3.1 如满足以下条件，则齿轮箱可不带辅助冷却装置： 3.1 Adequate for gear unit without auxiliary cooling. if: $P_2 \leqslant P_G = P_{G1} \times f_4 \times f_5 \times f_6 \times f_9$ 3.2 如满足以下条件，则齿轮箱带冷却风扇可满足要求： 3.2 Adequate for gear unit with fan cooling,if: $P_2 \leqslant P_G = P_{G2} \times f_4 \times f_6 \times f_9 \times f_{10}$ 3.3 如满足以下条件，则齿轮箱带冷却盘管可满足要求： 3.3 Adequate for gear unit with fitted cooling coil, if: $P_2 \leqslant P_G = P_{G3} \times f_5 \times f_7 \times f_8 \times f_{11}$ 3.3 如满足以下条件，则齿轮箱带冷却盘管和风扇可满足要求： 3.3 Adequate for gear unit with cooling coil and fan, if: $P_2 \leqslant P_G = P_{G5} \times f_7 \times f_8 \times f_{12}$ 3.5 如需要较高的热容量，则可按用户要求提供外部润滑油冷却装置进行冷却。 3.5 For higher thermal capacities, cooling by extermal oil, coolre on request	

齿轮箱 Gear Units
符号说明 Key to Symbols

E_D = 每小时工作周期，以百分比表示，如E_D=80% / h
Operating cycle per hour in %, e.g. E_D=80% / h

f_1 = 工作机系数 (表1)，19页
Factor for driven machine (table 1), pages 19

f_2 = 原动机系数 (表2)，20页
Factor for prime mover (table 2), page 20

f_3 = 峰值扭矩系数 (表3)，20页
Peak torque factor (table 3), page 20

f_4, f_5 = 环境温度系数 (表4+表5)，20页
Thermal factors (tables 4 + 5), page 20

f_6, f_7 = 海拔高度系数 (表6+表7)，20页
Factors for altitude (tables 6 + 7), page 20

f_8 = 立式安装齿轮箱供油系数 (表8)，21页
对于卧式安装齿轮箱：f_8=1
Oil supply factor for vertical gear units (Table 8), page 21
For horizontal gear units: f_8=1

f_9 , f_{10}
f_{11}, f_{12} = 热容量系数 (表9…14)，21–22页
Therm alcapacity factors (tables9... 1 4), pages21–22

a_1 = 规格系数
Size factor

a_2 = 传动比系数
Transmission ratio factor

i = 实际传动比
Actual ratio

iN = 额定传动比
Nominal ratio

is = 要求传动比
Required ratio

n1 = 输入转速 (r/min)
Input speed (r/min)

n2 = 输出转速 (r/min)
Output speed (r/min)

P_G = 要求的热容量
Required thermal capacity

P_{G1} = 齿轮箱的热容量，不带辅助冷却装置，24–32页
Thermal capacity for gear units without auxiliary cooling, pages 24–32

P_{G2} = 齿轮箱的热容量，带冷却风扇，24–32页
Thermal capacity for gear units with fan cooling, pages 24–32

P_{G3} = 齿轮箱的热容量，带内置冷却盘管，24–32页
Thermal capacity for gear units with built–in cooling coil, pages 24–32

P_{G4} = 齿轮箱的热容量，带内置冷却盘管和风扇，24–32页
Thermal capacity for gear units with built–in cooling coil and fan, pages 24–32

P_N = 齿轮箱的额定功率(kW)，见选型表，23–31页
Nominal power rating of gear units(kW), see tables, pages23–31

P_2 = 工作机的额定功率(kW)
Power rating of driven machine (kW)

t = 环境温度(℃)
Ambient temperature (℃)

T_A = 输入轴最大扭矩，如峰值工作扭矩、起动扭矩或制动扭矩(N.m)
Max. torque occurring on input shaft, e.g. peak operating–, starting– or braking torque (N.m)

T_{2N} = 额定输出扭矩 (kN.m)，33–34页
Nominal output torque (kN.m), pages 33–34

S_A = 减速机安全系数 (表15)20页
Safety coefficient of speed reductor (table 15) Page 20

齿轮箱 Gear Units
选型示例 Selection Example

已知参数：

原动机

电机功率：P_1=75kW

电机转速：n_1=1500rpm

最大起动扭矩：T_A=720N.m

工作机

皮带输送机功率：P_2=66kW

转速：n_2=26rpm

工作制：12小时／天

每小时起动次数：7

每小时工作周期：E_D=100%

环境温度：30℃

室外安装(风速)：(w≥4m/s)

海拔高度：海平面

重要性与安全要求：一般

齿轮箱设计

垂直轴齿轮箱

安装方式：卧式安装

输出轴d_2：位于齿轮箱右侧(面对输入轴)，布置型式C

输出轴d_2的转动方向：ccw

KNOWN CRITERIA:

PRIME MOVER

Electric motor: P_1=75 kW

Motor speed: n_1=1500 rpm

Max. starting torque: T_A=720 N.m

DRIVEN MACHINE

Belt conveyor: P_2=66 kW

Speed:n_2=26 rpm

Duty: 12 h/day

Starts per hour: 7

Operating cycle per hour: E_D=100%

Ambient temperature: 30℃

Outdoor installation: (w≥4m/s)

Altitude: sea level

Reliability: normal

GEAR UNIT DESIGN

Bevel–helical reductors

Mounting position: horizontal

Output shaft d_2: on right hand side design C

Direction of rotation of output shaft d_2: ccw

要求：齿轮箱的类型及规格Required：Type and size of gear units

1. 选择齿轮箱的类型及规格：Selection of gear unit type and size

1.1 传动比计算：Calculation of transmission ratio

$$i_S = \frac{n_1}{n_2} = \frac{1500}{26} = 57.7 \quad i_N = 56$$

1.2 确定额定功率 Determination of the gear unit nominal power rating

$$P_N \geqslant P_2 \times f_1 \times f_2 \times S_A = 66 \times 1.3 \times 1 \times 1.4 = 120kW$$

从额定功率表中选择：类型B3，规格10，对应的P_N=122kW

Selected from power rating table: type B3 , gear unit size 10 , with P_N =122kW

$$3.33 \times P_2 \geqslant P_N \qquad 3.33 \times 66 = 219.8kW > P_N$$

1.3 检查起动扭矩 Checking the starting torque

$$P_n \geqslant \frac{T_A \times n_1}{9550} \times f_s = \frac{720 \times 1500}{9550} \times 0.65 = 73.5kW \quad P_N = 122kW > 73.5kW$$

2. 确定热容量Determination of thermal capacity

根据表中给出的B3型齿轮箱参数，计算不带辅助冷却装置的齿轮箱热容量

Thermal capacity for gear units without auxiliary cooling, acc. to table for type B3

$$P_G = P_{G1} \times f_4 \times f_8 \times f_8 \times f_9 \quad P_G = 78.9kW \times 0.88 \times 1 \times 1 \times (1.23 - 2.80 \times 0.095 \times 0.15) \quad P_G = 82.6kW$$

$$P_2 = 66kW < P_G = 82.6kW$$

结论：齿轮箱不带辅助冷却装置，可满足要求！

Conclusion: A gear units without auxiliary cooling is sufficient!

齿轮箱 Gear Units
服务系数 Service Factor

表1 Table 1 — 工作机工况系数 f_1 Working machine working condition coefficient f_1

工作机 Working Machine		工作机最低工况系数 f_1 Minimum working machine workingcondition coefficient f_1			工作机 Working Machine		工作机最低工况系数 f_1 Minimum working machine workingcondition coefficient f_1		
		≤0.5h	0.5–10h	>10h			≤0.5h	0.5–10h	>10h
污水处理 Sewage treatment	浓缩器(中心传动) Concentrator(central transmission)	–	–	1.2	起重机械 Hoisting machinery	回转机构 Rotay mechanism	1	1.4	1.8
	压滤器 Filter press	1	1.3	1.5		俯仰机构 Elevation mechanism	1	1.1	1.4
	絮凝器 Flocculato	0.8	1	1.3		行走机构 Walking mechanism	1.1	1.6	2
	曝气机 Aerator	–	1.8	2		提升机构 Hoisting mechanism	1	1.4	1.8
	接集设备 Raking device	1	1.2	1.3		转臂式起重机 Rotary arm crane	1	1.2	1.6
	纵向、回转组合接集装置 Vertical and rotary combination raking device	1	1.3	1.5	化学 Chemical 工业 industry	挤压机 Extrusion press	–	–	1.6
	预浓缩器 Pre–concentrator	–	1.1	1.3		调浆机 Size mixer	–	1.8	2
	螺杆泵 Screw pump	–	1.3	1.5		橡胶砑光机 Rubber calender	–	1.5	1.75
	水轮机 Hydraulic turbine	–	–	2		冷却圆筒 cooling calender	–	1.3	1.5
	离心泵 Centrifugal pump	1	1.2	1.3		混料机，用于均匀介质 Mixer, for homogeneous medium	1	1.3	1.5
	1个活塞容积试泵 1 piston volume test pump	1.3	1.4	1.8		混料机，用于非均匀介质 Mixer, For inhomogeneous medium	1.4	1.6	1.8
	>1个活塞容积试泵， >1 piston volume test pump	1.2	1.4	1.5		搅拌机，用于密度均匀介质 Blender, for homogenous density	1	1.3	1.5
钢铁工业 Steel industry	拉线机 Wire drawing machine	1.25	1.5	1.75		搅拌机，用于密度非均匀介质 Blender, for inhomogenous density medium	1.2	1.5	1.75
	绕线机 Reeling machine	1	1.25	1.5		烘炉 Baking oven	1	1.3	1.2
	集中驱动轨道（无反转） Centralized driving rail (without reverserotation)	1.25	1.5	1.75		离心机 Centrifugal machine	1	1.25	7
	单独驱动轨道（无反转） Individual driving rail (without reverserotation)	1.5	1.75	2	冷却塔 Cooling towe	冷却塔风扇 Cooling tower fan	–	–	2
	集中驱动轨道（有反转） Centralized driving rail (with reverse rotation)	1.5	1.75	2		风机（轴流和离心式） Fan (axial flow and centrifugal type)	–	1.4	1.5
	单独驱动轨道（有反转） Individual driving rail (with reverse rotation)	1.6	1.8	2	蔗糖生产 Sucrose production	甘蔗切碎机 Sugarcane chopper	–	–	1.7
	可逆式中厚板轧机 Reversible middle thickness platerolling machine	–	1.8	2		甘蔗碾磨机 Sugarcane mil	–	–	1.7
纺织工业 Textile industry	织机 Weaving machine	1.25	1.5	1.75	甜菜糖生产 Beet sugar production	甜菜绞碎机 Beet mince	–	–	1.7
	纺纱机 Spinning machine	1	1.25	1.5		榨取机，机械制冷机，蒸煮机 Squeezer,mechanical refrigerator,cooking machine	–	–	1.2
	洗涤机 Washing machine	1	1.25	1.5		甜菜清洗机 Beet cleaner	–	–	1.4
输送机械 Conveying machinery	斗式输送机 Bucket conveyor	–	1.2	1.5		甜菜切碎机 Beet choppe	–	–	1.5
	绞车 Winding engine	1.4	1.6	1.8	索道缆车 Ropeway Cable car	运货索道 Cargo ropeway	–	1.3	1.4
	卷扬机 Winding machine	–	1.5	1.8		往返系统空中索道 Reciprocating system aerial ropeway	–	1.6	1.8
	货用电梯 Goods lift	–	1.2	1.5		T型杆升降机 T–shaped rod lifter	–	1.3	1.4
	客用电梯 Passenger lift	–	1.5	1.8		连续索道 Continuous ropeway	–	1.4	1.6
	刮板式输送机 Scraper conveyor	–	1.2	1.5	水泥工业 Cement industry	混泥土搅拌器 Concrete blender	–	1.5	1.5
	自动扶梯 Escalator	–	1.2	1.4		破碎机 Cracking machine	–	1.2	1.4
	轨道行走机构 Rail walking mechanism	–	1.5	–		回转窑 Rotary kiln	–	–	2
造纸机械 Papermaking machinery	各种类型 Various types	–	1.8	2		管式磨机 Pipe type grinding machine	–	–	2
	碎浆机驱动装置 Drive device of pulp shredder	2	2	2		选粉机 Powder choosing machine	–	1.6	1.6
往复式压缩机 Reciprocating compressor		–	1.8	1.9		辊压机 Roller press	–	–	2

齿轮箱 Gear Units
服务系数 Service Factor

表2 Table 2 原动机系数 Factor for prime mover f_2

电机，液压马达，汽轮机 Electric motors, hydraulic motors tubines	1.0
4–6缸，活塞发动机周期变化 1:100至1:200 Piston engines 4–6 cylinders cyclic variation 1:100 to 1:200	1.25
1–3缸，活塞发动机周期变化 最高达1:100 Piston engines 1–3 cylinders cyclic variation up to 1:100	1.5

表3 Table 3 峰值扭矩系数 Peak torque factor f_3

	每小时峰值负荷次数 load peaks per hour			
	1–5	6–30	31–100	>100
f3 单向载荷 steady direction of load	0.5	0.65	0.7	0.85
f3 交变载荷 Aitematinq direction of load	0.7	0.95	1.1	1.25

表4 Table 4 环境温度系数 Thermal factor f_4

不带辅助冷却装置或仅带冷却风扇
Without auxiliary cooling or with fan cooling

环境温度 Ambient temperature	每小时工作周期(ED)百分比% Oprating cycle per hour (ED) in %				
	100	80	60	40	20
10℃	1.14	1.2	1.32	1.54	2.04
20℃	1.00	1.06	1.16	1.35	1.79
30℃	0.87	0.93	1.00	1.18	1.56
40℃	0.71	0.75	0.82	0.96	1.27
50℃	0.55	0.58	0.64	0.74	0.98

表5 Table 5 环境温度系数 Thermal factor f_5

带冷却盘管或带冷却盘管和风扇
For cooling with cooling coil, or with fan and cooling coil

环境温度 Ambient temperature	每小时工作周期(ED)百分比% Oprating cycle per hour (ED) in %				
	100	80	60	40	20
10℃	1.04	1.10	1.21	1.40	1.86
20℃	1.00	1.06	1.16	1.35	1.79
30℃	0.93	0.99	1.08	1.26	1.66
40℃	0.88	0.93	1.02	1.96	1.58
50℃	0.81	0.86	0.94	1.09	1.45

表6 Table 6 海拔高度系数 Factor for altitude f_6

不带辅助冷却装置或仅带冷却风扇
Without auxiliary cooling or with fan cooling

系数 Factor	海拔高度（m，高于海平面） Altitude (metres above MSL)				
	高达 Up to	高达 Up to	高达 Up to	高达 Up to	高达 Up to
	1000	2000	3000	4000	5000
f_6	1.0	0.95	0.9	0.85	0.8

表7 Table 7 海拔高度系数 Factor for altitude f_7

带冷却盘管或带冷却盘管和风扇
For cooling with cooling coil, or with fan and cooling coil

系数 Factor	海拔高度（m，高于海平面） Altitude (metres above MSL)				
	高达 Up to	高达 Up to	高达 Up to	高达 Up to	高达 Up to
	1000	2000	3000	4000	5000
f_7	1.0	0.98	0.96	0.94	0.92

表15 Table 15 减速机安全系数 Factor safety S_A

重要性与安全要求 Importance and safety requirements	一般设备，减速器失效仅引起单机停产且更换备件 The failure of ordinary equipment and speed reducer can only result in production halts of single machine and repla cement of spare parts.	一般设备，减速器失效仅引起机组、生产线或全厂停产 The failure of ordinary equipment and speed reducer can only result in production halts or machines, production lines or the whole factory.	高度安全要求，减速器失效引起设备、人身事故 Higher safety requirements, the failure of speed reducer can cause the incident of equipment and human body.
S_A	1.1–1.3	1.3–1.5	1.5–1.7

齿轮箱 Gear Units
服务系数 Service Factor

表8 Table 8 立式安装齿轮箱供油系数。对于卧式安装齿轮箱f8=1.0；当采用强制润滑时，f8=1.05 Oil supply factor for vertical gear units. For horizontal gear units f8=1.0, and in case of forced lubrication f8=1.05 f_8

齿轮箱类型 Gear unit type	供油方式 Oil supply	规格1...12 Sizes 1...12				规格13...18 Sizes 13...18			
		不带辅助冷却装置 Without auxiliary cooling	带冷却风扇 With Fan	带冷却盘管 With Cooling coil	带风扇和冷却盘管 With fan and cooling coil	不带辅助冷却装置 Without auxiliary cooling	带冷却风扇 With Fan	带冷却盘管 With Cooling coil	带风扇和冷却盘管 With fan and cooling coil
H2.V H3.V H4.V	浸油润滑 Dip lubrication	0.95	*	0.95	*	*	*	*	*
	强制润滑 Forced lubrication	1.15	*	1.05	*	1.15	*	1.05	*
B2.V B3.V B4.V	浸油润滑 Dip lubrication	0.95	0.95	0.95	0.95	*	*	*	*
	强制润滑 Forced lubrication	1.15	1.10	1.10	1.10	1.15	1.10	1.10	1.10

表9 Table 9 不带辅助冷却装置齿轮箱的热容量系数 Thermal capacity factor for gear units without auxiliary cooling f_9

齿轮箱类型 Gear unit type	n r/min	安装位置 Place of installation		
		狭小空间安装规格 风速≥0.5m/s Small confned spaces wind velocity≥0.5m/s	室内大厅，大车间安装风速≥1.4m/s Large halls workshopsWind velocity ≥1.4m/s	室外安装 风速≥4.0m/s In the open Wind velocity ≥4.0m/s
H1	750	0.68–0.26Xa1Xa2	0.79–0.27Xa1Xa2	1.00
	1000	0.70–0.79Xa1Xa2	0.84–0.85Xa1Xa2	1.14–0.81Xa1Xa2
	1500	0.72–2.50Xa1Xa2	0.89–2.60Xa1Xa2	1.25–2.60Xa1Xa2
	1800	0.71–3.60Xa1Xa2	0.92–4.40Xa1Xa2	1.30–4.20Xa1Xa2
H2	750	0.76–0.08Xa1Xa2	0.79–0.21Xa1Xa2	1.00
	1000	0.76–1.00Xa1Xa2	0.87–1.40Xa1Xa2	1.12–1.30Xa1Xa2
	1500	0.83–4.10Xa1Xa2	0.96–4.60Xa1Xa2	1.25–4.20Xa1Xa2
	1800	0.85–6.80Xa1Xa2	0.98–7.10Xa1Xa2	1.31–6.80Xa1Xa2
H3	750	0.76	0.81–0.06Xa1Xa2	1.00
	1000	0.83–1.20Xa1Xa2	0.90–1.36Xa1Xa2	1.11–1.30Xa1Xa2
	1500	0.93–4.70Xa1Xa2	1.00–4.80Xa1Xa2	1.27–5.10Xa1Xa2
	1800	0.96–7.50Xa1Xa2	1.05–7.60Xa1Xa2	1.32–7.40Xa1Xa2
H4	750	0.78	0.83	1.00
	1000	0.85	0.91–1.60Xa1Xa2	1.10–2.40Xa1Xa2
	1500	0.97–10.0Xa1Xa2	1.03–12.5Xa1Xa2	1.27–14.0Xa1Xa2
	1800	1.02–18.4Xa1Xa2	1.09–21.2Xa1Xa2	1.34–23Xa1Xa2
B2	750	0.66–0.09Xa1Xa2	0.77–0.14Xa1Xa2	1.00
	1000	0.69–0.70Xa1Xa2	0.81–0.77Xa1Xa2	1.08–0.64Xa1Xa2
	1500	0.74–3.20Xa1Xa2	0.88–3.30Xa1Xa2	1.20–2.90Xa1Xa2
	1800	0.75–5.60Xa1Xa2	0.90–5.50Xa1Xa2	1.25–4.90Xa1Xa2
B3	750	0.73	0.80–0.05Xa1Xa2	1.00
	1000	0.79–0.63Xa1Xa2	0.87–0.81Xa1Xa2	1.10–0.73Xa1Xa2
	1500	0.86–2.40Xa1Xa2	0.95–2.60Xa1Xa2	1.23–2.80Xa1Xa2
	1800	0.88–4.00Xa1Xa2	0.99–4.30Xa1Xa2	1.28–4.30Xa1Xa2
B4	750	0.77	0.82	1.00
	1000	0.83	0.88	1.09–0.29Xa1Xa2
	1500	0.92–1.70Xa1Xa2	0.99–2.20Xa1Xa2	1.24–2.60Xa1Xa2
	1800	0.96–3.90Xa1Xa2	1.04–4.40Xa1Xa2	1.30–4.80Xa1Xa2

表10 Table 10 带冷却风扇齿轮箱的装置热容量系数 Thermal capacity factor for gear units with fan f_{10}

齿轮箱类型 Gear unit type	n r/min	安装位置 Place of installation		
		狭小空间安装规格 风速≥0.5m/s Small confned spaces wind velocity≥0.5m/s	室内大厅，大车间安装风速≥1.4m/s Large halls workshopsWind velocity ≥1.4m/s	室外安装 风速≥4.0m/s In the open Wind velocity ≥4.0m/s
H1	750	0.97–0.05Xa1Xa2	0.97–0.04Xa1Xa2	1.00
	1000	1.18–0.33Xa1Xa2	1.20–0.33Xa1Xa2	1.23–0.32Xa1Xa2
	1500	1.53–1.00Xa1Xa2	1.53–0.95Xa1Xa2	1.56–0.94Xa1Xa2
	1800	1.69–1.50Xa1Xa2	1.70–1.50Xa1Xa2	1.73–1.50Xa1Xa2
H2	750	0.95–0.07Xa1Xa2	0.96–0.06Xa1Xa2	1.00
	1000	1.16–0.65Xa1Xa2	1.17–0.63Xa1Xa2	1.21–0.55Xa1Xa2
	1500	1.54–2.40Xa1Xa2	1.55–2.40Xa1Xa2	1.58–2.20Xa1Xa2
	1800	1.74–3.80Xa1Xa2	1.75–3.80Xa1Xa2	1.78–3.60Xa1Xa2
H4	750	0.89–0.29Xa1Xa2	0.91–0.25Xa1Xa2	1.00
	1000	1.06–1.30Xa1Xa2	1.08–1.20Xa1Xa2	1.17–0.93Xa1Xa2
	1500	1.38–4.20Xa1Xa2	1.40–4.10Xa1Xa2	1.48–3.70Xa1Xa2
	1800	1.54–6.40Xa1Xa2	1.56–6.40Xa1Xa2	1.64–5.80Xa1Xa2
B2	750	0.95	0.96	1.00
	1000	1.13–0.15Xa1Xa2	1.14–0.16Xa1Xa2	1.19–0.19Xa1Xa2
	1500	1.47–0.92Xa1Xa2	1.48–0.92Xa1Xa2	1.52–0.95Xa1Xa2
	1800	1.65–1.70Xa1Xa2	1.66–1.70Xa1Xa2	1.69–1.70Xa1Xa2
B3	750	0.94	0.96	1.00
	1000	1.13–0.17Xa1Xa2	1.14–0.18Xa1Xa2	1.18–0.25Xa1Xa2
	1500	1.48–1.40Xa1Xa2	1.49–1.40Xa1Xa2	1.52–1.40Xa1Xa2
	1800	1.66–2.50Xa1Xa2	1.67–2.50Xa1Xa2	1.74–2.50Xa1Xa2

表11 Table 11 带冷却盘管齿轮箱的热容量系数 Thermal capacity factor for gear unit with cooling coil f_{11}

齿轮箱类型 Gear unit type	n r/min	安装位置 Place of installation		
		狭小空间安装规格 风速≥0.5m/s Small confned spaces wind velocity≥0.5m/s	室内大厅，大车间安装风速≥1.4m/s Large halls workshopsWind velocity ≥1.4m/s	室外安装 风速≥4.0m/s In the open Wind velocity ≥4.0m/s
H1	750	0.87	0.91	1.00
	1000	0.97–0.02Xa1Xa2	1.03–0.05Xa1Xa2	1.16–0.10Xa1Xa2
	1500	1.15–0.19Xa1Xa2	1.22–0.23Xa1Xa2	1.39–0.33Xa1Xa2
	1800	1.25–0.42Xa1Xa2	1.32–0.47Xa1Xa2	1.50–0.57Xa1Xa2
H2	750	0.88	0.91	1.00
	1000	1.01	1.06–0.08Xa1Xa2	1.17–0.24Xa1Xa2
	1500	1.27–0.79Xa1Xa2	1.33–0.88Xa1Xa2	1.47–1.10Xa1Xa2
	1800	1.40–1.40Xa1Xa2	1.46–1.50Xa1Xa2	1.61–1.70Xa1Xa2
H4	750	0.89	0.91	1.00
	1000	1.04	1.07	1.18–0.38Xa1Xa2
	1500	1.30–0.78Xa1Xa2	1.34–1.10Xa1Xa2	1.47–1.60Xa1Xa2
	1800	1.44–1.70Xa1Xa2	1.48–2.00Xa1Xa2	1.62–2.60Xa1Xa2
B2	750	0.86	0.90	1.00
	1000	0.98	1.02	1.15–0.09Xa1Xa2
	1500	1.14	1.19–0.05Xa1Xa2	1.38–0.37Xa1Xa2
	1800	1.21–0.13Xa1Xa2	1.29–0.29Xa1Xa2	1.49–0.64Xa1Xa2
B3	750	0.88	0.91	1.00
	1000	1.03	1.06	1.17–0.18Xa1Xa2
	1500	1.28–0.35Xa1Xa2	1.32–0.48Xa1Xa2	1.46–0.84Xa1Xa2
	1800	1.41–0.83Xa1Xa2	1.46–0.99Xa1Xa2	1.61–1.40Xa1Xa2

对于系数f_8，f_{10}和f_{11}<0.5，请与我们联系！ For factors f_8,f_{10} and f_{11}<0.5,please refer to us!　　(*根据客户要求*) On request

齿轮箱 Gear Units
服务系数 Service Factor

表12
Table 12

带冷却风扇和冷却盘管的齿轮箱的热容量系数
hermal capacity factor for gear units with fan and cooling coil

f_{12}

齿轮箱类型 Gear unit type	n r/min	安装地点 Place of installation: 狭小空间安装规格 风速≥0.5m/s Small confned spaces wind velocity≥0.5m/s	室内大厅，大车间安装风速≥1.4m/s Large halls workshopsWind velocity ≥1.4m/s	室外安装 风速≥4.0m/s In the open Wind velocity ≥4.0m/s
H1	750	0.98	0.98	1.00
	1000	1.19–0.09Xa1Xa2	1.20–0.09Xa1Xa2	1.22–0.09Xa1Xa2
	1500	1.56–0.31Xa1Xa2	1.56–0.30Xa1Xa2	1.57–0.29Xa1Xa2
	1800	1.75–0.52Xa1Xa2	1.76–0.52Xa1Xa2	1.77–0.52Xa1Xa2
H2	750	0.97	0.98	1.00
	1000	1.19–0.25Xa1Xa2	1.20–0.25Xa1Xa2	1.22–0.25Xa1Xa2
	1500	1.59–1.06Xa1Xa2	1.59–1.00Xa1Xa2	1.61–1.00Xa1Xa2
	1800	1.82–1.80Xa1Xa2	1.82–1.80Xa1Xa2	1.84–1.80Xa1Xa2
H3	750	0.94	0.95	1.00
	1000	1.14–0.46Xa1Xa2	1.15–0.47Xa1Xa2	1.20–0.48Xa1Xa2
	1500	1.51–2.10Xa1Xa2	1.52–2.00Xa1Xa2	1.57–2.00Xa1Xa2
	1800	1.71–3.30Xa1Xa2	1.72–3.30Xa1Xa2	1.77–3.20Xa1Xa2
B2	750	0.97	0.98	1.00
	1000	1.17–0.08Xa1Xa2	1.18–0.08Xa1Xa2	1.21–0.12Xa1Xa2
	1500	1.55–0.47Xa1Xa2	1.55–0.47Xa1Xa2	1.58–0.52Xa1Xa2
	1800	1.74–0.81Xa1Xa2	1.75–0.82Xa1Xa2	1.77–0.84Xa1Xa2
B3	750	0.97	0.97	1.00
	1000	1.17–0.08Xa1Xa2	1.18–0.10Xa1Xa2	1.21–0.19Xa1Xa2
	1500	1.56–0.84Xa1Xa2	1.57–0.85Xa1Xa2	1.60–0.92Xa1Xa2
	1800	1.78–1.50Xa1Xa2	1.78–1.50Xa1Xa2	1.80–1.50Xa1Xa2

对于系数f_{12}<0.5，请与我们联系！ For factors f_{12}<0.5, please refer to us!

表13
Table 13

尺寸系数 Size factor a1

Size	3	4	5	6	7	8	9	10	11	12	13	14
a1	0.024	0.030	0.050	0.055	0.065	0.075	0.085	0.095	0.135	0.160	0.190	0.200
Size	15	16	17	18	19	20	21	22	23	24	25	26
a1	0.027	0.290	0.320	0.345	0.370	0.390	0.530	0.610				

*) 对于这些尺寸，请与我们联系！ *) for these sizes, please refer to us!

表14
Table 14

传动比系数 Transmission ratio factor a2

i	H1SH	i	H2SH	i	H3SH	i	H4SH	i	B2SH	i	B3SH	i	B4SH
1.25	13.000	6.3	1.800	22.4	0.320	100	0.020	5	3.500	12.5	0.950	80	0.110
1.4	12.000	7.1	1.600	25	0.310	112	0.015	5.6	2.800	14	0.850	90	0.100
1.6	10.000	8	1.400	28	0.270	125	0.012	6.3	2.400	16	0.800	100	0.090
1.8	8.500	9	1.100	31.5	0.230	140	0.009	7.1	1.900	18	0.750	112	0.080
2	8.000	10	0.890	35.5	0.190	160	0.007	8	1.600	20	0.700	125	0.070
2.24	7.000	11.2	0.740	40	0.170	180	0.004	9	1.350	22.4	0.650	140	0.060
2.5	6.500	12.5	0.630	45	0.160	200	0.002	10	1.200	25	0.550	160	0.050
2.8	6.000	14	0.530	50	0.110	224	0.000	11.2	1.100	28	0.450	180	0.040
3.15	3.500	16	0.450	56	0.080	250	0.000	12.5	0.950	31.5	0.380	200	0.030
3.55	3.300	18	0.370	63	0.050	280	0.000	14	0.850	35.5	0.330	224	0.020
4	2.900	20	0.330	71	0.045	315	0.000	16	0.800	40	0.300	250	0.010
4.5	2.100	22.4	0.320	80	0.040	355	0.000	18	0.750	45	0.270	280	0.000
5	1.600	25	0.310	90	0.035	400	0.000			50	0.200	315	0.000
5.6	1.600	28	0.270	100	0.020	450	0.000			56	0.150	355	0.000
				112	0.015					63	0.130	400	0.000
										71	0.120		
										80	0.110		
										90	0.100		

H/B工业齿轮箱 GEAR UNITS

平行轴齿轮箱 Helical Gear Units
类型H1 Type H1

额定功率 Nominal Power Ratings
规格1...19 Sizes 1...19

额定功率 Nom.Power Ratings

iN	n1 (rpm)	n2 (rpm)	1	2	3	4	5	6	7	8	9	10	11	12	13	14	15	16	17	18	19	20	21	22
			机座号 Sizes																					
			额定功率 PN, kw Nom.Power Ratings PN, kw																					
1.25	1800	1440	119		392		1056		2005		3242													
	1500	1200	99		327		880		1671		2702													
	1200	960	79		262		704		1337		2162													
	1000	800	66		218		587		1114		1801													
1.4	1800	1286	112		364		968		1871		3001													
	1500	1071	93		303		807		1559		2501													
	1200	857	74		242		646		1247		2001													
	1000	714	62		202		538		1039		1667													
1.6	1800	1125	102		318		884		1674		2782		4715									根据客户要求供货 On request		
	1500	938	85		265		737		1395		2318		3929											
	1200	750	68		212		590		1116		1854		3143		4948									
	1000	625	57		177		491		930		1545		2619		4123									
1.8	1800	1000	95		251		806		1591		2554		4333											
	1500	833	79		209		672		1326		2128		3611											
	1200	667	63		167		538		1061		1702		2889		4632									
	1000	556	53		139		448		884		1419		2407		3860									
2	1800	900	88		235		773		1460		2356		4024											
	1500	750	73		196		644		1217		1963		3353											
	1200	600	58		157		515		974		1570		2682		4285									
	1000	500	49		131		429		811		1309		2235		3571									
2.24	1800	804	80		210		707		1304		2105		3704											
	1500	670	67		175		589		1087		1754		3087											
	1200	536	54		140		471		870		1403		2470		3940									
	1000	446	45		117		393		725		1169		2058		3283									
2.5	1800	720	76		196		634		1169		1885		3317											
	1500	600	63		163		528		974		1571		2764											
	1200	480	50		130		422		779		1257		2211		3619		5528							
	1000	400	42		109		352		649		1047		1843		3016		4607							
2.8	1800	643	67		182		565		1003		1596		2964											
	1500	536	56		152		471		836		1330		2470											
	1200	429	45		122		377		669		1064		1976		3230		5069							
	1000	357	37		101		314		557		887		1647		2692		4224							
3.15	1800	571	60		162		503		910		1465		2506		4091									
	1500	476	50		135		419		758		1221		2088		3409									
	1200	381	40		108		335		606		977		1670		2727		4620							
	1000	317	33		90		279		505		814		1392		2273		3850							
3.55	1800	507	53		149		442		824		1324		2323		3700									
	1500	423	44		124		368		687		1103		1936		3083									
	1200	338	35		99		294		550		882		1549		2466		4181							
	1000	282	29		83		245		458		735		1291		2055		3484							
4	1800	450	47		132		396		731		1178		2074		3336									
	1500	375	39		110		330		609		982		1728		2780									
	1200	300	31		88		264		487		786		1382		2224		3833		5435					
	1000	250	26		73		220		406		655		1152		1853		3194		4529					
4.5	1800	400	35		92		281		577		895		1674		2410		98							
	1500	333	29		77		234		481		746		1395		2008		82							
	1200	267	23		62		187		385		597		1116		1606		66		4073					
	1000	222	19		51		156		321		497		930		1339		55		3394					
5	1800	360	30		79		238		452		773		1271		2054		95							
	1500	300	25		66		198		377		644		1059		1712		79							
	1200	240	20		53		158		302		515		847		1370		63		3116		4373			
	1000	200	17		44		132		251		429		706		1141		53		2597		3644			
5.6	1800	321	20		67		202		384		589		1070		1745		86							
	1500	268	17		56		168		320		491		892		1454		72							
	1200	214	14		45		134		256		393		714		1163		58		2654		3374			
	1000	179	11		37		112		213		327		595		969		48		2212		2812			

卧式安装减速机要求采用强制润滑 Forced lubrication requied on horiaontal gear units

平行轴齿轮箱 Helical Gear Units
类型H1 Type H1

热容量 Thermal Capacities
规格1...19 Sizes 1...19

热容量 PG, kw Thermal Capacities PG, kw

iN		机座号 Sizes 1	2	3	4	5	6	7	8	9	10	11	12	13	14	15	16	17	18	19	20	21	22
		热容量PG(单位kw)取决于冷却方式：PG1:无辅助冷却装置; PG2:带冷却风扇; PG3:带冷却盘管; PG4:带风扇和冷却盘管 Thermal Capacity PG (in kw) dependent on kind of cooling: PG1: without auxiliary cooling; PG2:fan cooling; PG3:cooling coil; PG4:fan and cooling coil																					
1.25	PG1	70		105		188		322		497													
	PG2			146		360		580		875													
	PG3	109		283		659		1097		1841													
	PG4			313		789		1333		2210													
1.4	PG1	68		105		192		319		504													
	PG2			144		358		579		870													
	PG3	105		272		645		1075		1791													
	PG4			303		767		1294		2136													
1.6	PG1	66		104		186		316		507		516		747							根据客户要求供货 On request		
	PG2			140		347		555		853		1134		1394									
	PG3	100		257		606		981		1694		2616		2900									
	PG4			286		723		1194		2021		3283		3906									
1.8	PG1	66		107		185		313		502		511		740									
	PG2			151		335		561		834		1119		1441									
	PG3	94		275		574		960		1585		2494		2850									
	PG4			303		677		1178		1919		3135		3808									
2	PG1	65		104		178		310		492		507		733		991							
	PG2			146		321		544		806		1204		1413		1766							
	PG3	89		258		533		929		1501		2358		2986		2950							
	PG4			287		638		1118		1800		2963		3747		4341							
2.24	PG1	57		96		172		307		473		502		725		950							
	PG2			139		304		506		767		1154		1385		1752							
	PG3	84		243		498		829		1404		2224		2570		2800							
	PG4			270		594		1009		1682		2771		3512		4245							
2.5	PG1	54		89		164		303		449		498		719		923							
	PG2			127		285		474		720		1088		1357		1788							
	PG3	76		219		462		768		1281		2040		2500		3000							
	PG4			243		548		931		1547		2562		3253		4196							
2.8	PG1	52		87		155		295		473		493		713		925		955					
	PG2			119		264		494		750		1015		1329		1699		1846					
	PG3	70		202		421		792		1329		1876		2397		3090		3200					
	PG4			223		500		961		1594		2335		2979		4151		4574					
3.15	PG1	50		85		150		269		379		495		707		888		919					
	PG2			111		253		432		606		1067		1301		1609		1718					
	PG3	65		184		396		734		1117		1899		2354		2750		2900					
	PG4			204		466		878		1329		2376		2932		3809		4288					
3.55	PG1	45		78		145		248		351		479		699		849		902					
	PG2			101		245		395		554		955		1273		1565		1649					
	PG3	59		165		376		650		988		1663		2110		2622		2700					
	PG4			183		443		787		1192		2077		2643		3431		4118					
4	PG1	41		73		132		233		300		452		665		797		866		1051			
	PG2			91		220		353		467		866		1227		1520		1639		1647			
	PG3	52		146		334		573		818		1485		1903		2301		2700					
	PG4			162		392		690		985		1855		2352		3043		3665					
4.5	PG1	41		77		139		225		321		388		630		816		916		1020			
	PG2			100		221		331		492		728		1115		1475		1675		1771			
	PG3	53		155		328		529		843		1264		1713		2248		2841					
	PG4			171		386		636		1011		1570		2134		2922		3586					
5	PG1	37		69		134		218		290		377		604		812		980		1146			
	PG2			90		209		314		439		697		1022		1431		1734		1894			
	PG3	47		138		308		494		743		1212		1609		2140		2845					
	PG4			152		361		595		892		1477		2005		2757		3645					
5.6	PG1	37		66		122		212		274		364		571		736		899		1149			
	PG2			80		184		280		411		656		929		1386		1541		1878			
	PG3	47		120		267		438		682		1116		1419		1875		2509					
	PG4			133		314		520		821		1377		1739		2397		3181					

平行轴齿轮箱 Helical Gear Units
类型H2..,H3.. Type H2.., H3..

额定功率 Nominal Power Ratings
规格3...22 Sizes 3...22

额定功率 Nom.Power Ratings

iN	n1	n2	机座号 Sizes 1	2	3	4	5	6	7	8	9	10	11	12	13	14	15	16	17	18	19	20	21	22
	(rpm)		额定功率 PN, kw Nom.Power Ratings PN, kw																					
6.3	1800	286			104	188	314		569		942		1660		2572		4277		5832					
	1500	238			87	157	262		474		785		1383		2143		3564		4860					
	1200	190			70	126	210		379		628		1106		1714		2851		3888		5834			
	1000	159			58	105	175		316		523		922		1429		2376		3240		4862			
7.1	1800	254			92	167	278		504		835		1471		2280		3791	4242	5170	6098				
	1500	211			77	139	232		420		696		1226		1900		3159	3535	4308	5082				
	1200	169			62	111	186		336		557		981		1520		2527	2828	3446	4066	5173	5935		
	1000	141			51	93	155		280		464		817		1267		2106	2357	2872	3388	4311	4946		
8	1800	225			83	149	248	319	449	566	744	934	1312	1630	2032	2527	3378	3780	4607	5434				
	1500	188			69	124	207	266	374	472	620	778	1093	1358	1693	2106	2815	3150	3839	4528				
	1200	150			55	99	166	213	299	378	496	622	874	1086	1354	1685	2252	2520	3071	3622	4586	5262	6439	
	1000	125			46	83	138	177	249	315	413	519	729	905	1129	1404	1877	2100	2559	3019	3822	4385	5366	
9	1800	200			73	132	221	283	398	504	661	829	1165	1448	1805	2245	3001	3358	4092	4826				
	1500	167			61	110	184	236	332	420	551	691	971	1207	1504	1871	2501	2798	3410	4022				
	1200	133			49	88	147	189	266	336	441	553	777	966	1203	1497	2001	2238	2728	3218	4073	4673	5718	6388
	1000	111			41	73	123	157	221	280	367	461	647	805	1003	1123	1501	1865	2273	2681	3394	3894	4765	5323
10	1800	180			66	119	198	254	358	452	594	744	1046	1301	1621	2017	2695	3016	3676	4336				
	1500	150			55	99	165	212	298	377	495	620	872	1084	1351	1681	2246	2513	3063	3613				
	1200	120			44	79	132	170	238	302	396	496	698	867	1081	1345	1797	2010	2450	2890	3670	4210	5152	5755
	1000	100			37	66	110	141	199	251	330	413	581	723	901	1121	1497	1675	2042	2409	3058	3508	4293	4796
11.2	1800	161			59	106	176	227	320	404	530	665	935	1162	1448	1801	2407	2694	3283	3872				
	1500	134			49	88	147	189	267	337	442	554	779	968	1207	1501	2006	2245	2736	3227				
	1200	107			39	70	118	151	214	270	354	443	623	774	966	1201	1605	1796	2189	2582	3265	3746	4585	5122
	1000	89			33	59	98	126	178	225	295	369	519	645	805	1001	1337	1497	1824	2151	2721	3122	3821	4268
12.5	1800	144			53	95	158	204	287	362	475	595	836	1040	1297	1614	2156	2412	2940	3468	4403			
	1500	120			44	79	132	170	239	302	396	496	697	867	1081	1345	1797	2010	2450	2890	3669			
	1200	96			35	63	106	136	191	242	317	397	558	694	865	1076	1438	1608	1960	2312	2935	3367	4122	4604
	1000	80			29	53	88	113	159	201	264	331	465	578	721	897	1198	1340	1633	1927	2446	2806	3435	3837
14	1800	129			47	85	142	181	256	323	424	532	746	928	1157	1439	1922	2152	2622	3092	3926	4504		
	1500	107			39	71	118	151	213	269	353	443	622	773	964	1199	1602	1793	2185	2577	3272	3753		
	1200	86			31	57	94	121	170	215	282	354	498	618	771	959	1282	1434	1748	2062	2618	3002	3658	4086
	1000	71			26	47	79	101	142	179	235	295	415	515	643	799	1068	1195	1457	1718	2181	2502	3048	3405
16	1800	113			41	74	124	160	224	283	372	467	655	815	1015	1264	1690	1890	2303	2717	3449	3956		
	1500	94			34	62	103	133	187	236	310	389	546	679	846	1053	1408	1575	1919	2264	2874	3297		
	1200	75			27	50	82	106	150	189	248	311	437	543	677	842	1126	1260	1535	1811	2299	2638	3246	3625
	1000	63			23	41	69	89	125	157	207	259	364	453	564	702	939	1050	1279	1509	1916	2198	2705	3021
18	1800	100			36	66	109	140	198	251	329	412	578	720	896	1116	1492	1669	2034	2399	3046	3494		
	1500	83			30	55	91	117	165	209	274	343	482	600	747	930	1243	1391	1695	1999	2538	2912		
	1200	67			24	44	73	94	132	167	219	274	386	480	598	744	994	1113	1356	1599	2030	2330	2885	3223
	1000	56			20	37	61	78	110	139	183	229	321	400	498	620	829	927	1130	1333	1692	1941	2404	2686
20	1800	90			32	59	98	127	179	226	296	372	523	650	810	1008	1348	1508	1837	2167	2752	3157		
	1500	75			27	49	82	106	149	188	247	310	436	542	675	840	1123	1257	1531	1806	2293	2631		
	1200	60			22	39	66	85	119	150	198	248	349	434	540	672	898	1006	1225	1445	1834	2105	2576	2878
	1000	50			18	33	55	71	99	125	165	207	291	361	450	560	749	838	1021	1204	1529	1754	2147	2398
22.4	1800	80			30	52	86	114	156	202	260	332	458	581	740	901	1288	1348	1684	1937	2526	2820	3536	
	1500	67			25	43	72	95	130	168	217	277	382	484	617	751	1073	1123	1403	1614	2105	2350	2947	
	1200	54			20	34	58	76	104	134	174	222	306	387	494	601	858	898	1122	1291	1684	1880	2358	2590
	1000	45			17	29	48	63	87	112	145	185	255	323	411	501	715	749	935	1076	1403	1567	1965	2158
25	1800	72					83	102	155	181	257	298	452	521	664	806	1153	1304	1508	1810	2262	1522	3167	3544
	1500	60					69	85	129	151	214	248	377	434	553	672	961	1087	1257	1508	1885	1268	2639	2953
	1200	48					55	68	103	121	171	198	302	347	442	538	769	870	1006	1206	1508	1014	2111	2362
	1000	40					46	57	86	101	143	165	251	289	369	448	641	725	838	1005	1257	845	1759	1969
28	1800	64					74	89	139	160	230	264	407	460	598	739	1038	1174	1357	1628	2035	2341	2850	3190
	1500	54					62	74	116	133	192	220	339	383	498	616	865	978	1131	1357	1696	1951	2375	2658
	1200	43					50	59	93	106	154	176	271	306	398	493	692	782	905	1086	1357	1561	1900	2126
	1000	36					41	49	77	89	128	147	226	255	332	411	577	652	754	905	1131	1301	1583	1772
31.5	1800	57					66	88	124	154	205	259	362	452	530	658	923	1044	1206	1447	1810	2081	2533	2834
	1500	48					55	73	103	128	171	216	302	377	442	548	769	870	1005	1206	1508	1734	2111	2362
	1200	38					44	58	82	102	137	173	242	302	354	438	615	696	804	965	1206	1387	1689	1890
	1000	32					37	49	69	85	114	144	201	251	295	365	513	580	670	804	1005	1156	1407	1575
35.5	1800	51					58	77	108	134	180	227	317	396	464	575	808	913	1056	1266	1583	1820	2216	2480
	1500	42					48	64	90	112	150	189	264	330	387	479	673	761	880	1055	1319	1517	1847	2067
	1200	34					38	51	72	90	120	151	211	264	310	383	538	609	704	844	1055	1214	1478	1654
	1000	28					32	43	60	75	100	126	176	220	258	319	449	507	587	703	879	1011	1231	1378

卧式安装减速机要求采用强制润滑 Forced lubrication requied on horiaontal gear units

平行轴齿轮箱 Helical Gear Units
类型H2..,H3.. Types H2.., H3..

热容量 Thermal Capacities
规格3...22 Sizes 3...22

热容量 PG, kw Thermal Capacities PG, kw

iN		机座号 Sizes 1	2	3	4	5	6	7	8	9	10	11	12	13	14	15	16	17	18	19	20	21	22
		热容量PG(单位kw)取决于冷却方式：PG1:无辅助冷却装置; PG2:带冷却风扇; PG3:带冷却盘管; PG4:带风扇和冷却盘管 Thermal Capacity PG (in kw) dependent on kind of cooling: PG1: without auxiliary cooling; PG2:fan cooling; PG3:cooling coil; PG4:fan and cooling coil																					
6.3	PG1			53	75	88		143		182		244		406		532		572		650			
	PG2				94	131		214		295		417		734		993		1031		1071			
	PG3			85	119	193		312		476		647		1100		1703		1900					
	PG4				134	218		373		559		797		1385		2088		2430					
7.1	PG1			51	77	87		138		179		240		404		542	570	575	581	699	720	770	
	PG2				96	132		204		285		416		717		980	1023	1179	1026	1071	1209	1143	
	PG3			80	120	189		297		443		638		1044		1650	1722	2070	2200				
	PG4				136	216		348		524		771		1323		2008	2121	2525	2604				
8	PG1			49	73	85	93	135	155	174	180	235	281	398	437	548	579	575	639	738	745	844	862
	PG2				91	128	139	196	229	275	300	403	482	689	757	956	1007	1125	1127	1171	1233	1332	1310
	PG3			76	113	182	192	280	319	421	550	608	856	999	1110	1565	1661	1982	2000				
	PG4				128	206	219	331	380	497	604	733	997	1257	1387	1922	2039	2491	2699				
9	PG1			47	71	83	92	129	148	169	174	231	273	388	431	542	576	589	653	763	778	892	902
	PG2				88	121	137	188	220	263	290	382	471	658	733	923	978	1110	1175	1218	1328	1435	1474
	PG3			71	107	171	187	264	302	403	520	567	810	943	1059	1487	1590	1894	2021				
	PG4				121	193	213	312	359	468	572	680	956	1181	1322	1823	1946	2373	2618				
10	PG1			44	67	81	90	125	143	165	168	229	264	376	425	537	574	600	672	785	801	917	936
	PG2				82	114	134	179	210	251	277	361	459	627	708	891	949	1094	1223	1398	1424	1537	1638
	PG3			66	100	159	181	247	285	385	490	525	764	887	1008	1409	1518	1805	2042				
	PG4				113	180	206	292	337	439	540	628	915	1105	1258	1724	1852	2255	2536				
11.2	PG1			42	64	77	89	123	139	162	166	220	259	380	414	515	561	595	673	783	822	921	972
	PG2				78	109	130	179	200	236	266	360	431	615	678	849	912	1048	1179	1301	1408	1435	1611
	PG3			62	94	149	172	246	269	346	439	515	712	867	1079	1450	1649	1920	2150				
	PG4				106	168	196	289	318	409	503	621	835	1087	1186	1613	1750	2118	2402				
12.5	PG1			41	61	75	85	120	134	155	164	224	249	349	398	529	549	593	649	783	815	919	972
	PG2				74	106	121	170	190	222	253	346	409	563	644	842	867	1016	1128	1307	1355	1457	1578
	PG3			60	88	142	158	230	252	322	411	485	652	767	1000	1496	1563	1850	2050				
	PG4				99	161	180	270	297	376	476	583	780	960	1109	1595	1638	2017	2256				
14	PG1			38	57	71	81	110	131	149	162	222	248	330	400	501	556	589	633	765	814	898	966
	PG2				70	99	114	153	190	212	238	323	408	527	640	782	860	961	1093	1238	1312	1419	1524
	PG3			56	82	131	149	205	249	301	382	450	648	708	980	1382	1533	1720	1955				
	PG4				92	148	169	240	294	354	442	537	770	887	1089	1453	1618	1880	2149				
16	PG1			35	52	66	79	108	127	143	160	218	242	300	367	476	525	552	594	735	792	865	943
	PG2				63	92	111	142	180	196	224	299	390	471	576	733	798	900	1030	1161	1244	1327	1442
	PG3			51	73	120	142	187	233	277	354	408	616	630	895	1270	1398	1621	1850				
	PG4				83	136	161	219	275	323	408	487	721	782	964	1341	1473	1734	2000				
18	PG1			34	49	65	74	110	122	143	155	213	237	292	350	450	477	535	612	677	767	844	913
	PG2				58	87	101	138	158	188	207	288	348	451	515	650	710	838	918	1036	1108	1200	1286
	PG3			50	70	116	131	184	208	269	331	402	564	670	884	1233	1350	1550	1788				
	PG4				78	130	147	212	241	308	378	469	653	811	920	1266	1386	1675	1842				
20	PG1			32	48	60	69	96	109	134	144	206	228	283	317	436	469	545	617	686	732	815	883
	PG2				58	83	96	131	151	186	198	259	305	395	438	590	629	772	860	946	996	1088	1161
	PG3			46	68	107	120	168	189	256	302	343	463	520	663	1001	1085	1365	1473				
	PG4				77	122	136	196	224	298	350	409	546	644	715	1054	1139	1459	1608				
22.4	PG1			32	44	55	68	92	105	124	142	202	224	252	320	367	455	504	594	661	696	769	817
	PG2				54	76	94	125	150	171	195	238	305	376	440	540	602	712	827		947		1105
	PG3			45	62	98	116	159	186	231	294	311	457	496	657	828	1013	921	1455				
	PG4				70	111	133	187	220	269	337	371	535	589	710	958	1070	1077	1540				
25	PG1					61	63	94	102	127	138	185	219	262	298	361	397	440	491	581	610	644	679
	PG2					76	87	131	139	176	188	256	290	378	404	535	587	651	712				
	PG3					100	107	154	170	221	281	379	424	475	599	780	830	864	969				
	PG4					110	123	181	200	258	321	432	502	562	643	910	972	1022	1134				
28	PG1					60	58	96	98	127	127	181	209	258	282	355	394	434	476	577	608	642	695
	PG2					74	80	134	132	173	172	247	267	369	414	523	582	636	694				
	PG3					96	99	155	162	215	260	362	391	445	504	742	787	838	917				
	PG4					107	113	184	192	249	290	412	455	528	603	868	928	989	1080				
31.5	PG1					58	65	90	100	123	124	176	214	251	275	347	390	422	469	564	596	638	690
	PG2					72	81	126	139	166	175	237	288	354	403	498	575	603	683				
	PG3					93	101	148	155	210	264	344	395	423	478	717	754	803	885				
	PG4					103	112	175	184	242	302	389	450	500	574	830	892	938	1045				
35.5	PG1					57	63	90	100	120	123	169	208	253	274	347	380	415	454	564	588	635	684
	PG2					70	79	122	139	162	170	228	280	347	394	479	543	573	643				
	PG3					89	96	143	155	201	262	327	373	404	450	653	724	741	845				
	PG4					99	108	167	184	232	297	371	427	475	540	752	846	859	986				

平行轴齿轮箱 Helical Gear Units
类型H3..,H4.. Type H3.., H4..

额定功率 Nominal Power Ratings
规格5...22 Sizes 5...22

额定功率 Nom.Power Ratings

iN	n1 (rpm)	n2	机座号 Sizes 1	2	3	4	5	6	7	8	9	10	11	12	13	14	15	16	17	18	19	20	21	22
			额定功率 PN, kw Nom.Power Ratings PN, kw																					
40	1800	45					53	70	98	121	162	205	287	358	420	521	731	826	955	1146	1433	1648	2005	2244
	1500	38					44	58	82	101	135	171	239	298	350	434	609	688	796	955	1194	1373	1671	1870
	1200	30					35	46	66	81	108	137	191	238	280	347	487	550	637	764	955	1098	1337	1496
	1000	25					29	39	55	67	90	114	159	199	233	289	406	459	531	637	796	915	1114	1247
45	1800	40					46	60	85	106	140	179	248	311	365	452	635	718	829	995	1244	1430	1741	1949
	1500	33					38	50	71	88	117	149	207	259	304	377	529	598	691	829	1037	1192	1451	1624
	1200	27					30	40	57	70	94	119	166	207	243	302	423	478	553	663	830	954	1161	1299
	1000	22					25	33	47	59	78	99	138	173	203	251	353	399	461	553	691	795	967	1083
50	1800	36					42	55	77	96	128	162	226	283	331	410	577	652	754	905	1130	1301	1583	1771
	1500	30					35	46	64	80	107	135	188	236	276	342	481	543	628	754	942	1084	1319	1476
	1200	24					28	37	51	64	86	108	150	189	221	274	385	434	502	603	754	867	1055	1181
	1000	20					23	31	43	53	71	90	125	157	184	228	321	362	419	503	628	723	879	984
56	1800	32					37	49	70	86	115	146	204	254	299	370	520	587	678	815	1018	1170	1424	1595
	1500	27					31	41	58	72	96	122	170	212	249	308	433	489	565	679	848	975	1187	1329
	1200	21					25	33	46	58	77	98	136	170	199	246	346	391	452	543	678	780	950	1063
	1000	18					21	27	39	48	64	81	113	141	166	205	289	326	377	453	565	650	791	886
63	1800	29					34	43	62	77	102	130	181	226	265	329	462	522	604	724	905	1040	1266	1417
	1500	24					28	36	52	64	85	108	151	188	221	274	385	435	503	603	754	867	1055	1181
	1200	19					22	29	42	51	68	86	121	150	177	219	308	348	402	482	603	694	844	945
	1000	16					19	24	35	43	57	72	101	125	147	183	257	290	335	402	503	578	703	787
71	1800	25					29	38	54	67	90	114	158	198	233	288	403	456	528	634	792	911	1109	1241
	1500	21					24	32	45	56	75	95	132	165	194	240	336	380	440	528	660	759	924	1034
	1200	17					19	26	36	45	60	76	106	132	155	192	269	304	352	422	528	607	739	827
	1000	14					16	21	30	37	50	63	88	110	129	160	224	253	293	352	440	506	616	689
80	1800	23					26	35	48	60	80	102	142	178	208	258	361	409	473	566	709	815	992	1110
	1500	19					22	29	40	50	67	85	118	148	173	215	301	341	394	472	591	679	827	925
	1200	15					18	23	32	40	54	68	94	118	138	172	241	273	315	378	473	543	662	740
	1000	13					15	19	27	33	45	57	79	99	115	143	201	227	263	315	394	453	551	617
90	1800	20					23	30	42	54	71	90	126	157	185	229	322	364	420	504	608	724	860	986
	1500	17					19	25	35	45	59	75	105	131	154	191	268	303	350	420	507	603	717	822
	1200	13					15	20	28	36	47	60	84	105	123	153	214	242	280	336	406	482	574	658
	1000	11					13	17	23	30	39	50	70	87	103	127	179	202	233	280	338	402	478	548
100	1800	18						28	38	48	64	82	113	142	166	205	288	326	377	426	565	631	792	876
	1500	15						23	32	40	53	68	94	118	138	171	240	272	314	355	471	526	660	730
	1200	12						18	26	32	42	54	75	94	110	137	192	218	251	284	377	421	528	584
	1000	10						15	21	27	35	45	63	79	92	114	160	181	209	237	314	351	440	487
112	1800	16						24	35	42	58	71	101	126	148	184	258	292	337	404	505	581	707	791
	1500	13						20	29	35	48	59	84	105	123	153	215	243	281	337	421	484	589	659
	1200	11						16	23	28	38	47	67	84	98	122	172	194	225	270	337	387	471	527
	1000	9						13	19	23	32	39	56	70	82	102	143	162	187	225	281	323	393	439
125	1800	14							31	38	52	65	90	113	133	164	230	260	301	362	452	521	634	708
	1500	12							26	32	43	54	75	94	111	137	192	217	251	302	377	434	528	590
	1200	10							21	26	34	43	60	75	89	110	154	174	201	242	302	347	422	472
	1000	8							17	21	29	36	50	63	74	91	128	145	167	201	251	289	352	393
140	1800	13							28	35	46	58	80	58	119	146	205	233	269	323	403	464	565	632
	1500	11							23	29	38	48	67	48	99	122	171	194	224	269	336	387	471	527
	1200	9							18	23	30	38	54	38	79	98	137	155	179	215	269	310	377	422
	1000	7							15	19	25	32	45	32	66	81	114	129	149	179	224	258	314	351
160	1800	11.3							24	30	40	50	71	89	104	128	181	204	236	283	354	408	496	556
	1500	9.4							20	25	33	42	59	74	87	107	151	170	197	236	295	340	413	463
	1200	7.5							16	20	26	34	47	59	70	86	121	136	158	189	236	272	330	370
	1000	6.3							13	17	22	28	39	49	58	71	101	113	131	157	197	227	275	309
180	1800	10							22	26	36	44	62	78	91	114	160	180	209	251	313	360	438	490
	1500	8.3							18	22	30	37	52	65	76	95	133	150	174	209	261	300	365	408
	1200	6.7							14	18	24	30	42	52	61	76	106	120	139	167	209	240	292	326
	1000	5.6							12	15	20	25	35	43	51	63	89	100	116	139	174	200	243	272
200	1800	9							19	24	32	41	56	71	83	103	144	163	188	226	283	325	396	443
	1500	7.5							16	20	27	34	47	59	69	86	120	136	157	188	236	271	330	369
	1200	6							13	16	22	27	38	47	55	69	96	109	126	150	189	217	264	295
	1000	5							11	13	18	23	31	39	46	57	80	91	105	125	157	181	220	246
224	1800	8							17	22	29	36	50	64	74	91	128	145	168	202	262	290	354	396
	1500	6.7							14	18	24	30	42	53	62	76	107	121	140	168	218	242	295	330
	1200	5.4							11	14	19	24	34	42	50	61	86	97	112	134	174	194	236	264
	1000	4.5							9	12	16	20	28	35	41	51	71	81	93	112	145	161	197	220
250	1800	7.2							16	19	25	32	46	56	66	82	115	131	151	181	226	260	317	354
	1500	6							13	16	21	27	38	47	55	68	96	109	126	151	188	217	264	295
	1200	4.8							10	13	17	22	30	38	44	54	77	87	101	121	150	174	211	236
	1000	4							9	11	14	18	25	31	37	45	64	73	84	101	125	145	176	197
280	1800	6.4							14	17	23	29	41	50	60	74	104	118	136	163	204	234	284	319
	1500	5.4							12	14	19	24	34	42	50	62	87	98	113	136	170	195	237	266
	1200	4.3							10	11	15	19	27	34	40	50	70	78	90	109	136	156	190	213
	1000	3.6							8	9	13	16	23	28	33	41	58	65	75	91	113	130	158	177
315	1800	5.7							12	16	20	26	36	46	53	66	92	104	121	145	181	208	253	283
	1500	4.8							10	13	17	22	30	38	44	55	77	87	101	121	151	173	211	236
	1200	3.8							8	10	14	18	24	30	35	44	62	70	81	97	121	138	169	189
	1000	3.2							7	9	11	15	20	25	29	37	51	58	67	81	101	115	141	157
355	1800	5.1							10	13	18	23	31	40	47	58	74	91	101	127	154	182	216	248
	1500	4.2							9	11	15	19	26	33	39	48	62	76	84	106	128	152	180	207
	1200	3.4							7	9	12	15	21	26	31	38	50	61	67	85	102	122	144	166
	1000	2.8							6	7	10	13	17	22	26	32	41	51	56	71	85	101	120	138
400	1800	4.5								12		20		36		52		76		107		160		222
	1500	3.8								10		17		30		43		63		89		133		185
	1200	3								8		14		24		34		50		71		106		148
	1000	2.5								7		11		20		29		42		59		89		123
450	1800	4								10		17		31		46								
	1500	3.3								9		14		26		38								
	1200	2.7								7		11		21		30								
	1000	2.2								6		9		17		25								

平行轴齿轮箱 Helical Gear Units
类型H3..,H4.. Types H3..,H4..

热容量 Thermal Capacities
规格5...22 Sizes 5...22

热容量 PG, kw Thermal Capacities PG, kw

iN		机座号 Sizes																					
		1	2	3	4	5	6	7	8	9	10	11	12	13	14	15	16	17	18	19	20	21	22
		热容量PG(单位kw)取决于冷却方式；PG1:无辅助冷却装置; PG2:带冷却风扇; PG3:带冷却盘管; PG4:带风扇和冷却盘管 Thermal Capacity PG (in kw) dependent on kind of cooling: PG1: without auxiliary cooling; PG2:fan cooling; PG3:cooling coil; PG4:fan and cooling coil																					
40	PG1					54	62	86	97	111	121	162	204	228	258	330	360	382	430	527	562	631	673
	PG2					66	77	115	134	150	165	216	271	309	368	470	512	550	606				
	PG3					84	93	135	149	190	253	315	356	383	429	617	666	697	774				
	PG4					92	105	156	177	219	286	355	406	443	511	722	780	823	906				
45	PG1					52	60	80	87	106	116	161	194	217	247	321	344	378	412	521	542	623	666
	PG2					64	75	107	122	142	157	215	255	291	345	443	496	542	585				
	PG3					80	90	129	144	179	244	307	340	362	408	606	631	677	727				
	PG4					88	101	149	170	206	275	347	386	417	481	697	745	800	856				
50	PG1					51	57	74	85	102	110	156	189	212	238	312	340	369	407	493	536	611	657
	PG2					61	71	100	115	135	147	206	245	281	322	413	480	490	570				
	PG3					79	84	122	136	180	228	304	322	359	387	607	615	666	716				
	PG4					86	94	141	159	205	256	342	364	411	450	682	720	757	838				
56	PG1					48	55	71	82	97	106	146	182	204	227	305	339	350	398	470	507	600	643
	PG2					58	68	95	110	127	143	189	240	262	297	386	454	460	520				
	PG3					74	80	117	130	170	217	280	319	342	367	566	616	616	697				
	PG4					81	90	135	151	192	245	313	362	386	420	627	702	699	789				
63	PG1					46	54	66	78	93	105	139	177	194	221	290	321	327	375	454	500	588	622
	PG2					54	65	88	105	120	139	173	230	249	278	365	394	417	460				
	PG3					70	79	108	124	159	217	260	315	319	364	528	578	571	647				
	PG4					76	88	124	144	179	242	286	355	360	407	584	633	638	710				
71	PG1					46	51	65	75	91	101	138	168	190	212	282	301	321	352	436	469	566	598
	PG2					53	62	84	98	118	133	166	228	245	271	335	378	384	440				
	PG3					71	75	106	118	157	204	258	288	309	346	513	537	562	601				
	PG4					76	83	120	135	177	228	279	333	350	390	553	595	609	667				
80	PG1					44	48	63	70	87	96	130	159	185	202	269	291	306	345	411	449	542	585
	PG2					51	58	83	93	112	121	165	201	237	260	325	358	365	423				
	PG3					66	70	103	109	149	194	239	267	297	324	487	521	531	586				
	PG4					71	77	117	126	168	213	265	299	336	368	529	571	575	645				
90	PG1					43	49	60	67	81	94	127	154	175	199	255	279	286	329	389	422	524	560
	PG2					50	56	78	89	108	119	160	198	230	254	310	334	340	395				
	PG3					65	71	96	107	138	192	230	262	275	313	450	492	495	556				
	PG4					70	77	109	123	160	211	255	295	316	354	505	533	535	606				
100	PG1						46	53	67	73	90	106	145	154	194	213	263	246	307	331	400	430	543
	PG2						55		88		112		182		243		315		369				
	PG3						67		104		178		245		302		458		517				
	PG4						73		119		195		273		339		498		563				
112	PG1						46	53	64	71	84	106	140	152	183	206	220	239	263	321	335	421	445
	PG2						54		82		105		174		235								
	PG3						66		97		168		236		279								
	PG4						72		111		183		261		318								
125	PG1							52	58	70	75	103	117	148	161	200	216	232	255	314	331	416	436
140	PG1							50	57	69	74	101	118	144	159	194	207	225	247	293	312	392	424
160	PG1							49	55	66	73	98	115	138	155	187	201	216	239	282	302	380	406
180	PG1							47	54	64	72	95	113	133	151	185	194	214	230	267	285	375	392
200	PG1							46	52	63	69	92	109	131	145	182	192	212	229	259	275	369	386
224	PG1							44	51	60	67	88	106	127	140	173	189	200	225	252	267	353	382
250	PG1							42	50	58	65	84	102	121	138	164	178	191	213	242	260	335	365
280	PG1							40	47	57	63	81	98	117	133	161	170	186	202	233	248	324	346
315	PG1							39	45	54	60	79	93	112	128	153	166	177	198	228	242	314	334
355	PG1							37	44	53	59	75	90	107	123	148	159	173	189	216	236	299	324
400	PG1								42		56		88		118		154		183		223		308
450	PG1								40		55		84		113								

直交轴齿轮箱 Bevel–helical Gear Units
类型B2.., B3.. Type B2.., B3..

额定功率 Nominal Power Ratings
规格1...22 Sizes 1...22

额定功率 Nom.Power Ratings

iN	n1	n2	机座号 Sizes																					
			1	2	3	4	5	6	7	8	9	10	11	12	13	14	15	16	17	18	19	20	21	22
	(rpm)		额定功率 PN, kw Nom.Power Ratings PN, kw																					
5	1800	360	43	76	116	218	354		671		1056		1621		2488									
	1500	300	36	63	97	182	295		559		880		1351		2073									
	1200	240	29	50	78	146	236		447		704		1081		1658		3066							
	1000	200	24	42	65	121	197		373		587		901		1382		2555							
5.6	1800	321	38	67	104	196	317		600		943		1516		2256									
	1500	268	32	56	87	163	264		500		786		1263		1880									
	1200	214	26	45	70	130	211		400		629		1010		1504		2744							
	1000	179	21	37	58	109	176		333		524		842		1253		2287							
6.3	1800	286	35	60	92	174	281	359	533	667	838	1064	1405	1645	2123	2453								
	1500	238	29	50	77	145	234	299	444	556	698	887	1171	1371	1769	2044								
	1200	190	23	40	62	116	187	239	355	445	558	710	937	1097	1415	1635	2597	2818						
	1000	159	19	33	51	97	156	199	296	371	465	591	781	914	1179	1363	2164	2348						
7.1	1800	254	30	53	82	154	250	318	472	592	743	944	1300	1511	1936	2227								
	1500	211	25	44	68	128	208	265	393	493	619	787	1083	1259	1613	1856								
	1200	169	20	35	54	102	166	212	314	394	495	630	866	1007	1290	1485	2339	2569	3455					
	1000	141	17	29	45	85	139	177	262	329	413	525	722	839	1075	1237	1949	2141	2879					
8	1800	225	28	47	73	137	222	283	420	527	661	841	1193	1393	1819	2078	3118							
	1500	188	23	39	61	114	185	236	350	439	551	701	994	1161	1516	1732	2598							
	1200	150	18	31	49	91	148	189	280	351	441	561	795	929	1213	1386	2078	2324	3062					
	1000	125	15	26	41	76	123	157	233	293	367	467	663	774	1011	1155	1732	1937	2552					
9	1800	200	24	42	65	121	197	252	373	468	588	748	1060	1280	1637	1909	2771	3106						
	1500	167	20	35	54	101	164	210	311	390	490	623	883	1067	1364	1591	2309	2588						
	1200	133	16	28	43	81	131	168	249	312	392	498	706	854	1091	1273	1847	2070	2719	3208				
	1000	111	13	23	36	67	109	140	207	260	327	415	589	711	909	1061	1539	1725	2266	2673				
10	1800	180	22	37	59	109	178	226	336	420	528	671	952	1169	1470	1790	2488	2790						
	1500	150	18	31	49	91	148	188	280	350	440	559	793	974	1225	1492	2073	2325						
	1200	120	14	25	39	73	118	150	224	280	352	447	634	779	980	1194	1658	1860	2450	2890				
	1000	100	12	21	33	61	99	125	187	233	293	373	529	649	817	995	1382	1550	2042	2408				
11.2	1800	161	19	34	52	97	158	202	300	376	472	600	851	1044	1313	1642	2222	2492						
	1500	134	16	28	43	81	132	168	250	313	393	500	709	870	1094	1368	1852	2077						
	1200	107	13	22	34	65	106	134	200	250	314	400	567	696	875	1094	1482	1662	2180	2572				
	1000	89	11	19	29	54	88	112	167	209	262	333	473	580	729	912	1235	1385	1817	2143				
12.5	1800	144	17	30	47	83	142	181	257	336	422	536	762	935	1176	1470	1991	2232	2940					
	1500	120	14	25	39	69	118	151	214	280	352	447	635	779	980	1225	1659	1860	2450					
	1200	96	11	20	31	55	94	121	171	224	282	358	508	623	784	980	1327	1488	1960	2312	2513		3418	
	1000	80	9	17	26	46	79	101	143	187	235	298	423	519	653	817	1106	1240	1633	1927	2094		2848	
14	1800	129	16	26	42	80	132	161	245	300	397	479	713	834	1075	1310	1842	1990	2622	3092				
	1500	107	13	22	35	67	110	134	204	250	331	399	594	695	896	1092	1535	1658	2185	2577				
	1200	86	10	18	28	54	88	107	163	200	265	319	475	556	717	874	1228	1326	1748	2062	2338	1552	3211	
	1000	71	9	15	23	45	73	89	136	167	221	266	396	463	597	728	1023	1105	1457	1718	1948	1293	2676	
16	1800	113	13	23	37	73	120	142	226	254	366	420	661	732	980	1152	1678	1819	2363	2717				
	1500	94	11	19	31	61	100	118	188	212	305	350	551	610	817	960	1398	1516	1969	2264				
	1200	75	9	15	25	49	80	94	150	170	244	280	441	488	654	768	1118	1213	1575	1811	2177	2438	3008	3341
	1000	63	7	13	21	41	67	79	125	141	203	233	367	407	545	640	932	1011	1313	1509	1814	2032	2507	2784
18	1800	100	11	19	31	67	110	132	206	241	338	391	605	678	887	1043	1543	1669	2086	2503				
	1500	83	9	16	26	56	92	110	172	201	282	326	504	565	739	869	1286	1391	1738	2086				
	1200	67	7	13	21	45	74	88	138	161	226	261	403	452	591	695	1029	1113	1390	1669	2027	2251	2815	3082
	1000	56	6	11	17	37	61	73	115	134	188	217	336	377	493	579	857	927	1159	1391	1689	1876	2346	2568
20	1800	90			34	62	103	125	193	226	320	371	565	641	829	971	1442	1574	1885	2262				
	1500	75			28	52	86	104	161	188	267	309	471	534	691	809	1202	1312	1571	1885				
	1200	60			22	42	69	83	129	150	214	247	377	427	553	647	962	1050	1257	1508	1885	2086	2639	2858
	1000	50			19	35	57	69	107	125	178	206	314	356	461	539	801	875	1047	1257	1571	1738	2199	2382
22.4	1800	80			30	55	92	116	173	209	287	346	505	606	740	893	1288	1457	1684	2021	2526	2904		
	1500	67			25	46	77	97	144	174	239	288	421	505	617	744	1073	1214	1403	1684	2105	2420		
	1200	54			20	37	62	78	115	139	191	230	337	404	494	595	858	971	1122	1347	1684	1936	2375	2658
	1000	45			17	31	51	65	96	116	159	192	281	337	411	496	715	809	935	1123	1403	1613	1979	2215
25	1800	72			28	49	83	109	155	192	257	324	452	565	664	822	1153	1304	1508	1810	2262	2602		
	1500	60			23	41	69	91	129	160	214	270	377	471	553	685	961	1087	1257	1508	1885	2168		
	1200	48			18	33	55	73	103	128	171	216	302	377	442	548	769	870	1006	1206	1508	1734	2111	2363
	1000	40			15	27	46	61	86	107	143	180	251	314	369	457	641	725	838	1005	1257	1445	1759	1969
28	1800	64			24	44	74	98	139	173	230	292	407	509	598	739	1038	1174	1357	1628	2035	2340	2850	
	1500	54			20	37	62	82	116	144	192	243	339	424	498	616	865	978	1131	1357	1696	1950	2375	
	1200	43			16	30	50	66	93	115	154	194	271	339	398	493	692	782	905	1086	1357	1560	1900	2126
	1000	36			13	25	41	55	77	96	128	162	226	283	332	411	577	652	754	905	1131	1300	1583	1772
31.5	1800	57			22	40	66	88	124	154	205	259	362	452	530	658	923	1044	1206	1447	1810	2081	2533	
	1500	48			18	33	55	73	103	128	171	216	302	377	442	548	769	870	1005	1206	1508	1734	2111	
	1200	38			14	26	44	58	82	102	137	173	242	302	354	438	615	696	804	965	1206	1387	1689	1890
	1000	32			12	22	37	49	69	85	114	144	201	251	295	365	513	580	670	804	1005	1156	1407	1575

卧式安装减速机要求采用强制润滑 Forced lubrication requied on horiaontal gear units

直交轴齿轮箱 Bevel–helical Gear Units
类型B2.., B3.. Types B2.., B3..

热容量 Thermal Capacities
规格1...22 Sizes 1...22

热容量 PG, kw Thermal Capacities PG, kw

iN		机座号 Sizes 1	2	3	4	5	6	7	8	9	10	11	12	13	14	15	16	17	18	19	20	21	22
		热容量PG(单位kw)取决于冷却方式：PG1:无辅助冷却装置; PG2:带冷却风扇; PG3:带冷却盘管; PG4:带风扇和冷却盘管 Thermal Capacity PG (in kw) dependent on kind of cooling: PG1: without auxiliary cooling; PG2:fan cooling; PG3:cooling coil; PG4:fan and cooling coil																					
5	PG1	34.9	45.6	59.7	83.4	106		152		186		280		360		517							
	PG2	38.1	50.6	73.1	115	160		218		236		478		659		828							
	PG3	41.1	59.2	109	190	285		419		495		805		1403		1540							
	PG4	45	67.5	118	206	314		470		594		1032		1680		1845							
5.6	PG1	33.4	44	57.6	77.1	107		145		180		276		376		531	558	570					
	PG2	36	48.5	70.4	106	150		210		225		488		658		818	858	869					
	PG3	41.6	58.4	104	171	261		384		497		826		1355		1650	1595	2187					
	PG4	45	64.8	112	186	288		431		545		983		1617		1856	1870	2224					
6.3	PG1	32	39.7	52.2	73.3	99.8	112	139	160	176	194	273	339	355		523	571	591					
	PG2	34.7	43.7	63.5	100	140	173	197	210	233	252	466	540	597	673	820	848	871					
	PG3	38.1	51.2	91.8	159	238	350	350	440	497	614	735	1025	1192	1414	1540	1540	2016					
	PG4	41	57.3	99	173	264	384	390	497	557	689	868	1215	1412	1691	1877	1902	2273					
7.1	PG1	30.7	39.4	51.5	68.8	91.2	106	132	155	168	188	284	350	381	429	534	586	603	627				
	PG2	35.4	43.5	62.7	93.6	131	162	186	201	225	237	440	527	601	667	787	838	861	880				
	PG3	37	50.4	90.9	147	218	323	318	380	421	561	711	1011	1164	1374	1528	1518	1889	2161				
	PG4	39	57	97.8	160	240	352	360	460	498	633	837	1203	1377	1628	1789	1816	2183	2454				
8	PG1	28.5	36.6	48	62.6	90.1	99.8	126	150	164	180	276	332	356	423	499	567	580	618				
	PG2	31.2	40.2	58.2	86.9	121	150	176	198	219	246	402	515	564	636	746	828	840	862				
	PG3	33.8	48	83.5	135	198	294	297	372	412	510	631	968	1026	1274	1360	1576	1675	1993				
	PG4	35.8	52.5	89.8	146	219	322	333	441	480	577	744	1153	1221	1425	1606	1823	1934	2319				
9	PG1	25	34.2	45.8	58.9	83.2	93.6	121	144	150	168	283	359	374	425	529	560	591	639				
	PG2	26.6	37.6	55.2	82.7	117	140	167	195	211	222	387	506	520	626	678	735	773	819				
	PG3	29.9	43.2	78.4	126	190	270	279	378	410	474	596	932	978	1261	1293	1417	1680	1880				
	PG4	33	48.3	84	137	210	293	312	426	472	529	701	1085	1148	1384	1523	1633	1830	2059				
10	PG1	22.2	28.6	38.4	52	84.8	86.4	113	133	140	159	258	327	366	422	500	559	593	620				
	PG2	23	31.2	46.4	69.9	99.5	130	155	189	203	218	362	459	492	573	630	702	720	783				
	PG3	25	36	64.3	104	173	245	252	356	380	440	550	884	904	1131	1206	1333	1650	1800				
	PG4	26.2	39.8	69.1	113	190	267	284	396	430	488	646	1010	1059	1232	1401	1551	1728	1944				
11.2	PG1	21.3	27.8	37.6	50.9	65.6	83.2	110	125	132	152	255	336	346	440	467	550	572	619				
	PG2	22.1	30.4	44.8	67.2	95.5	125	138	180	195	215	308	401	420	525	536	625	655	708				
	PG3	24	34.7	62.1	99.7	150	235	221	335	362	411	458	760	820	1048	1021	1193	1440	1680				
	PG4	27.2	38.6	66.4	108	165	256	248	372	399	460	539	938	972	1112	1177	1369	1512	1779				
12.5	PG1	20.5	29.4	37.3	57.6	81	80.6	104	126	157	150	218	321	335	423	413	521	458	580	552		623	
	PG2	21.4	32	45.1	66.5	97	115	141	167	205	205	277	395	434	495	535	567	625	622	664		761	
	PG3	25.9	38.1	62.2	102	173	213	256	303	405	380	524	750	754	876	1065	1070	1195	1310				
	PG4	27.5	40.6	66.7	108	183	230	272	338	440	420	570	865	905	1027	1195	1233	1415	1586				
14	PG1	19.4	25.6	33.3	55.7	78	76.5	109	117	152	138	211	302	322	378	401	429	445	460	556	605	635	654
	PG2	21	27.8	39.7	64.9	93.2	102	135	148	197	181	267	347	417	439	520	565	625	648	673	737	780	854
	PG3	22.6	32.8	54.4	97.4	166	186	245	267	386	323	500	660	721	768	1025	1065	1150	1305				
	PG4	23.8	35	58.1	104	176	200	260	296	420	362	545	746	860	896	1150	1240	1365	1430				
16	PG1	18.6	24	31.2	53.7	75.2	86.8	105	122	146	158	204	239	310	365	389	417	433	447	560	611	641	665
	PG2	19.8	25.9	37.1	62.2	89.7	102	130	149	189	212	256	313	400	468	502	543	600	630	687	745	793	862
	PG3	21.8	30.4	50.2	93.7	158	173	234	264	369	420	480	645	689	728	980	1025	1130	1250				
	PG4	23	32.5	53.6	100	168	186	249	289	400	448	523	770	816	910	1100	1190	1310	1375				
18	PG1	17.1	21.8	28.3	51.4	72.2	83.7	101	118	139	152	197	232	299	353	377	404	419	436	564	621	657	677
	PG2	18.2	23.7	33.6	59.8	86	98.2	125	143	181	204	246	301	383	449	482	523	581	605	701	754	802	870
	PG3	19.5	27.5	45.1	89.1	152	166	225	253	353	403	465	615	659	700	940	982	1085	1200				
	PG4	20.8	29.3	48	95.3	160	178	242	276	382	429	510	730	775	870	1050	1135	1245	1320				
20	PG1			33	49.6	69.6	80.7	98.9	113	133	146	194	225	289	340	363	392	400	423	570	629	669	691
	PG2			37.1	57	82.9	94.4	120	138	174	195	241	288	372	429	475	502	548	585	715	761	815	875
	PG3			58.4	85.4	144	159	221	245	342	384	459	590	641	668	921	940	1075	1155				
	PG4			61.1	90.7	153	170	239	264	374	409	508	695	734	825	1044	1085	1242	1270				
22.4	PG1			32.8	47.8	67.5	77.4	92.1	109	130	140	184	218	275	327	344	381	394	425	575	635	681	708
	PG2			37.1	54.7	79.5	90.8	112	132	165	187	227	276	353	409	460	490	537	585	730	781	837	888
	PG3			58.4	82.2	139	152	201	235	320	365	426	580	601	660	880	928	1041	1127				
	PG4			61.1	87.2	147	163	216	252	345	392	471	655	679	780	984	1057	1191	1298				
25	PG1			30.7	43.8	61.9	74.2	87.5	106	122	135	187	219	260	315	347	378	392	413	562	604	670	681
	PG2			34.7	49.9	72.6	87.4	106	129	155	178	213	269	328	389	430	474	520	571	715	763	822	861
	PG3			54.1	74.4	125	145	188	225	291	356	389	573	546	651	794	893	941	1084				
	PG4			56.5	78.7	133	155	201	243	320	387	430	624	621	741	887	1002	1070	1249				
28	PG1			29.9	43.5	61	71.4	82.7	99	115	129	179	221	249	301	330	363	380	388	540	569	638	663
	PG2			33.6	49.9	71.2	84	99.8	120	145	169	201	255	315	372	400	441	486	527	679	725	797	837
	PG3			51.8	73.9	123	140	176	206	272	330	361	526	506	603	779	801	913	979				
	PG4			54.2	78.2	131	149	189	222	294	354	400	581	575	686	879	900	1037	1121				

直交轴齿轮箱 Bevel–helical Gear Units
类型B3.., B4.. Type B3.., B4..

额定功率 Nominal Power Ratings
规格3...22 Sizes 3...22

额定功率 Nom.Power Ratings

iN	n1 (rpm)	n2 (rpm)	机座号 Sizes 1	2	3	4	5	6	7	8	9	10	11	12	13	14	15	16	17	18	19	20	21	22
			额定功率 PN, kw Nom.Power Ratings PN, kw																					
35.5	1800	51			19	35	58	77	108	134	180	227	317	396	464	575	808	913	1056	1266	1583	1820	2216	2480
	1500	42			15.8	29	48	64	90	112	150	189	264	330	387	479	673	761	880	1055	1319	1517	1847	2067
	1200	34			12.6	23	38	51	72	90	120	151	211	264	310	383	538	609	704	844	1055	1214	1478	1654
	1000	28			10.5	19	32	43	60	75	100	126	176	220	258	319	449	507	587	703	879	1011	1231	1378
40	1800	45			16.8	31	53	70	98	121	162	205	287	358	420	521	731	826	955	1146	1433	1648	2005	2244
	1500	38			14	26	44	58	82	101	135	171	239	298	350	434	609	688	796	955	1194	1373	1671	1870
	1200	30			11.2	21	35	46	66	81	108	137	191	238	280	347	487	550	637	764	955	1098	1337	1496
	1000	25			9.3	17	29	39	55	67	90	114	159	199	233	289	406	459	531	637	796	915	1114	1247
45	1800	40			14.4	28	46	60	85	106	140	179	248	311	365	452	635	718	829	995	1244	1430	1741	1949
	1500	33			12	23	38	50	71	88	117	149	207	259	304	377	529	598	691	829	1037	1192	1451	1624
	1200	27			9.6	18	30	40	57	70	94	119	166	207	243	302	423	478	553	663	830	954	1161	1299
	1000	22			8	15	25	33	47	59	78	99	138	173	203	251	353	399	461	553	691	795	967	1083
50	1800	36			13.2	25	42	55	77	96	128	162	226	283	331	410	577	652	754	905	1130	1300	1583	1771
	1500	30			11	21	35	46	64	80	107	135	188	236	276	342	481	543	628	754	942	1083	1319	1476
	1200	24			8.8	17	28	37	51	64	86	108	150	189	221	274	385	434	502	603	754	866	1055	1181
	1000	20			7.3	14	23	31	43	53	71	90	125	157	184	228	321	362	419	503	628	722	879	984
56	1800	32			12.2	23	37	49	70	86	115	146	204	254	299	370	520	587	678	815	1018	1170	1424	1595
	1500	27			10.2	19	31	41	58	72	96	122	170	212	249	308	433	489	565	679	848	975	1187	1329
	1200	21			8.2	15	25	33	46	58	77	98	136	170	199	246	346	391	452	543	678	780	950	1063
	1000	18			6.8	13	21	27	39	48	64	81	113	141	166	205	289	326	377	453	565	650	791	886
63	1800	29			10.8	20.4	34	43	60	77	102	130	181	226	265	329	462	522	604	724	905	1040	1266	1417
	1500	24			9	17	28	36	50	64	85	108	151	188	221	274	385	435	503	603	754	867	1055	1181
	1200	19			7.2	13.6	22	29	40	51	68	86	121	150	177	219	308	348	402	482	603	694	844	945
	1000	16			6	11.3	19	24	33	43	57	72	101	125	147	183	257	290	335	402	503	578	703	787
71	1800	25			9.5	17.4	29	38	53	67	90	114	158	198	233	288	403	456	528	634	792	911	1109	1241
	1500	21			7.9	14.5	24	32	44	56	75	95	132	165	194	240	336	380	440	528	660	759	924	1034
	1200	17			6.3	11.6	19	26	35	45	60	76	106	132	155	192	269	304	352	422	528	607	739	827
	1000	14			5.3	9.7	16	21	29	37	50	63	88	110	129	160	224	253	293	352	440	506	616	689
80	1800	23					26	34	48	60	80	102	142	178	208	258	361	409	473	566	709	815	992	1110
	1500	19					22	28	40	50	67	85	118	148	173	215	301	341	394	472	591	679	827	925
	1200	15					18	22	32	40	54	68	94	118	138	172	241	273	315	378	473	543	662	740
	1000	13					15	19	27	33	45	57	79	99	115	143	201	227	263	315	394	453	551	617
90	1800	20					23	29	43	53	71	90	126	157	185	229	322	364	420	504	630	724	881	986
	1500	17					19	24	36	44	59	75	105	131	154	191	268	303	350	420	525	603	734	822
	1200	13					15	19	29	35	47	60	84	105	123	153	214	242	280	336	420	482	587	658
	1000	11					13	16	24	29	39	50	70	87	103	127	179	202	233	280	350	402	489	548
100	1800	18					21	28	38	48	64	82	113	142	166	205	288	326	377	452	565	650	792	886
	1500	15					17.3	23	32	40	53	68	94	118	138	171	240	272	314	377	471	542	660	738
	1200	12					14	18	26	32	42	54	75	94	110	137	192	218	251	302	377	434	528	590
	1000	10					12	15	21	27	35	45	63	79	92	114	160	181	209	251	314	361	440	492
112	1800	16					18	24	35	43	48	72	101	126	148	184	258	292	337	404	505	581	707	791
	1500	13					15	20	29	36	37	60	84	105	123	153	215	243	281	337	421	484	589	659
	1200	11					12	16	23	29	30	48	67	84	98	122	172	194	225	270	337	387	471	527
	1000	9					10	13	19	24	25	40	56	70	82	102	143	162	187	225	281	323	393	439
125	1800	14					16.8	21.6	31	38	43	65	90	113	133	164	230	260	301	362	452	521	634	709
	1500	12					14	18	26	32	32	54	75	94	111	137	192	217	251	302	377	434	528	591
	1200	10					11.2	14.4	21	26	26	43	60	75	89	110	154	174	201	242	302	347	422	473
	1000	8					9.3	12	17	21	21	36	50	63	74	91	128	145	167	201	251	289	352	394
140	1800	12.9					14.4	19.4	28	35	38	58	80	101	119	146	205	233	269	323	403	464	565	632
	1500	10.7					12	16.2	23	29	34	48	67	84	99	122	171	194	224	269	336	387	471	527
	1200	8.6					9.6	13	18	23	27	38	54	67	79	98	137	155	179	215	269	310	377	422
	1000	7.1					8	10.8	15	19	23	32	45	56	66	81	114	129	149	179	224	258	314	351
160	1800	11.3					13.2	17.2	24	30	33	50	71	89	104	128	181	204	236	283	354	408	496	556
	1500	9.4					11	14.3	20	25	31	42	59	74	87	107	151	170	197	236	295	340	413	463
	1200	7.5					8.8	11.4	16	20	25	34	47	59	70	86	121	136	158	189	236	272	330	370
	1000	6.3					7.3	9.5	13	17	21	28	39	49	58	71	101	113	131	157	197	227	275	309
180	1800	10					11.5	15.6	22	26	30	44	62	78	91	114	160	180	209	251	313	360	438	490
	1500	8.3					9.6	13	18	22	29	37	52	65	76	95	133	150	174	209	261	300	365	408
	1200	6.7					7.7	10.4	14	18	23	30	42	52	61	76	106	120	139	167	209	240	292	326
	1000	5.6					6.4	8.7	12	15	19	25	35	43	51	63	89	100	116	139	174	200	243	272
200	1800	9					10.3	13.7	19	24	27	41	56	71	83	103	144	163	188	226	283	325	396	443
	1500	7.5					8.6	11.4	16	20	26	34	47	59	69	86	120	136	157	188	236	271	330	369
	1200	6					6.9	9.1	13	16	21	27	38	47	55	69	96	109	126	150	189	217	264	295
	1000	5					5.7	7.6	11	13	17	23	31	39	46	57	80	91	105	125	157	181	220	246
224	1800	8					9.2	12	17.3	21.6	24	36	50	64	74	91	128	145	168	202	252	290	354	396
	1500	6.7					7.7	10	14.4	18	24	30	42	53	62	76	107	121	140	168	210	242	295	330
	1200	5.4					6.2	8	11.5	14.4	19	24	34	42	50	61	86	97	112	134	168	194	236	264
	1000	4.5					5.1	6.7	9.6	12	16	20	28	35	41	51	71	81	93	112	140	161	197	220
250	1800	7.2					8.3	10.9	15.6	19.2	25	32	46	56	66	82	115	131	151	181	226	260	317	354
	1500	6					6.9	9.1	13	16	21	27	38	47	55	68	96	109	126	151	188	217	264	295
	1200	4.8					5.5	7.3	10.4	12.8	17	22	30	38	44	54	77	87	101	121	150	174	211	236
	1000	4					4.6	6.1	8.7	10.7	14	18	25	31	37	45	64	73	84	101	125	145	176	197
280	1800	6.4					7.4	9.8	14.4	17.3	23	29	41	50	60	74	104	118	136	163	204	234	284	319
	1500	5.4					6.2	8.2	12	14.4	19	24	34	42	50	62	87	98	113	136	170	195	237	266
	1200	4.3					5	6.6	9.6	11.5	15	19	27	34	40	50	70	78	90	109	136	156	190	213
	1000	3.6					4.1	5.5	8	9.6	13	16	23	28	33	41	58	65	75	91	113	130	158	177
315	1800	5.7					6.6	8.8	12.4	15.6	20	26	36	46	53	66	92	104	121	145	181	208	253	283
	1500	4.8					5.5	7.3	10.3	13	17	22	30	38	44	55	77	87	101	121	151	173	211	236
	1200	3.8					4.4	5.8	8.2	10.4	14	18	24	30	35	44	62	70	81	97	121	138	169	189
	1000	3.2					3.7	4.9	6.9	8.7	11	15	20	25	29	37	51	58	67	81	101	115	141	157
355	1800	5.1						7.7		13.4		23		40		58		91		127		182		248
	1500	4.2						6.4		11.2		19		33		48		76		106		152		207
	1200	3.4						5.1		9		15		26		38		61		85		122		166
	1000	2.8						4.3		7.5		13		22		32		51		71		101		138
400	1800	4.5						7		12		20.4		36		52								
	1500	3.8						5.8		10		17		30		43								
	1200	3						4.6		8		13.6		24		34								
	1000	2.5						3.9		6.7		11.3		20		29								

卧式安装减速机要求采用强制润滑 Forced lubrication requied on horiaontal gear units

直交轴齿轮箱 Bevel–helical Gear Units
类型B3.., B4.. Types B3.., B4..

热容量 Thermal Capacities
规格3...22 Sizes 3...22

热容量 PG, kw Thermal Capacities PG, kw

iN		机座号 Sizes 1	2	3	4	5	6	7	8	9	10	11	12	13	14	15	16	17	18	19	20	21	22
		热容量PG(单位kw)取决于冷却方式：PG1:无辅助冷却装置; PG2:带冷却风扇; PG3:带冷却盘管; PG4:带风扇和冷却盘管 Thermal Capacity PG (in kw) dependent on kind of cooling: PG1: without auxiliary cooling; PG2:fan cooling; PG3:cooling coil; PG4:fan and cooling coil																					
31.5	PG1			28.2	41	57.6	65.8	79.5	94.7	109	121	170	208	236	286	319	340	353	373	509	548	601	645
	PG2			31.7	46.9	67.2	76.6	93.6	113	136	159	189	238	296	346	384	428	449	515	621	679	729	805
	PG3			48	68.8	115	126	164	192	249	303	337	460	481	551	683	770	819	957				
	PG4			50.2	72.8	122	135	176	207	273	329	371	527	533	628	767	864	941	1085				
35.5	PG1			26.7	39	55.5	65.1	75.2	89.6	106	114	149	189	226	255	293	311	315	325	475	500	588	631
	PG2			29.8	44.3	64.3	75.5	89	107	131	148	180	224	282	325	369	395	430	477	596	628	700	744
	PG3			44.8	64	109	125	155	180	242	281	316	445	462	514	648	689	781	873				
	PG4			47	67.7	116	133	167	195	263	303	351	485	505	582	728	778	891	982				
40	PG1			23.5	33.9	48.6	61.6	65.6	84.3	99	108	150	184	211	258	296	315	321	336	464	504	558	611
	PG2			26.2	38.2	56	71.5	77.6	100	121	139	168	211	263	307	347	379	406	457	558	603	655	713
	PG3			38.9	54.4	92.5	116	132	168	222	258	290	419	426	477	603	658	735	822				
	PG4			40.8	57.3	97.9	124	142	182	242	284	322	456	464	540	673	737	829	932				
45	PG1			23.2	33.4	47.4	59.2	63.3	80.3	90	103	144	177	192	249	271	307	311	325	445	478	513	578
	PG2			25.6	37.4	54.6	68.5	75	95.1	110	134	153	201	235	294	314	355	370	430	528	563	595	667
	PG3			38.4	52.8	89.3	110	127	159	198	251	262	395	410	449	537	612	658	760				
	PG4			40	56	94.7	117	137	173	216	272	289	430	461	511	598	681	746	865				
50	PG1			22.7	34.1	47.2	52	62.9	70.5	88	98.3	143	168	198	234	274	282	300	306	433	439	520	531
	PG2			25.3	38.2	54.1	59.5	74.4	83.7	107	124	150	186	242	273	316	322	375	392	507	515	594	606
	PG3			37	53.3	86.9	93.8	124	137	192	233	255	361	371	412	540	575	663	692				
	PG4			38.7	56.6	92.2	99.7	133	147	209	251	280	395	421	471	601	640	756	777				
56	PG1			20.3	30.4	42.7	50.4	57.5	68.3	79.4	90	132	164	180	211	249	275	288	311	395	424	471	521
	PG2			22.4	34.1	48.8	57.9	67.5	81	97	113	135	170	217	246	285	323	360	397	458	512	534	593
	PG3			32.3	47.2	77.4	90.6	111	131	170	206	225	325	330	367	480	550	596	702				
	PG4			33.9	49.8	82.2	96.3	119	141	183	224	249	354	375	416	537	610	676	786				
63	PG1			20	29	40.8	49.6	55.2	67.1	76	86.3	124	160	171	203	239	261	272	295	386	410	463	493
	PG2			21.8	32	46.1	57.4	63.9	80	91	111	127	167	204	250	270	292	322	359	439	461	513	541
	PG3			31.5	44.3	72.3	88.2	104	128	158	200	210	314	308	377	450	485	568	616				
	PG4			32.8	46.6	77	93.9	112	138	171	217	232	343	349	428	505	545	640	704				
71	PG1			18.6	25.8	37.6	45.8	51	65.3	69	79.4	112	148	154	200	226	249	261	288	365	396	436	476
	PG2			20	28.3	42.1	52	58.8	72.8	83	99.6	129	164	185	225	249	276	300	341	411	443	480	521
	PG3			28.6	38.7	65.9	78.7	94.4	115	140	176	186	279	276	335	415	457	516	587				
	PG4			29.8	40.8	69.9	83.7	102	123	152	191	205	303	311	382	465	513	591	665				
80	PG1					35.9	43.4	53.5	59.4	76.4	75.3	114	139	164	189	216	234	266	279	333	375	464	450
	PG2						49		68.9		94.3		168		212		255		316		414		487
	PG3						73.8		108		165		258		312		426		547				
	PG4						78.4		116		178		281		357		470		615				
90	PG1					35.8	40	52.1	55.1	74	68.7	108	125	158	171	215	234	254	284	318	343	453	490
	PG2						45		63.5		85.5		154		193								
	PG3						67		97.8		146		227		281								
	PG4						71.5		105		158		248		317								
100	PG1					33.9	38.1	48.5	57.5	69	79.5	103	134	149	173	204	223	238	270	299	326	439	486
112	PG1					33	38.1	48.4	56	68	77	98.5	126	143	165	195	211	228	254	283	306	414	440
125	PG1					31.3	36.1	46	52.3	65.3	71.5	93.6	120	135	156	186	203	218	241	270	291	400	440
140	PG1					29.5	35	43.9	52.1	63	71	90	115	131	149	180	194	209	230	261	278	388	413
160	PG1					26.6	33.1	38.8	49.6	56.3	68	81	109	123	141	170	186	198	223	248	269	370	401
180	PG1					26.3	31.5	38.1	47.3	55	65.5	79	105	114	138	158	176	183	209	228	255	344	383
200	PG1					26.1	28.4	38.8	41.8	54.6	58.6	78.3	94.6	113	130	156	164	181	194	231	245	345	355
224	PG1					23.5	28	35.3	41	50	57.3	72.3	92	103	120	144	163	166	193	214	239	318	354
250	PG1					23.1	27.8	33.8	41.9	47.8	57	69	91.3	98.5	119	138	149	159	176	204	220	305	328
280	PG1					21.4	25	30.4	38.1	44.4	52.4	64.5	81	90.5	109	126	143	146	168	189	210	288	313
315	PG1					19.5	24.5	28.5	36.3	41.3	49.8	59	80.3	86	104	118	130	136	154	178	195	264	295
355	PG1						22.8		32.9		46.5		74.8		95.5		122		144		184		270
400	PG1						21		31.1		43.1		68.8		90.5								

平行轴齿轮箱 Helical Gear Units
类型H1..,H2..,H3..,H4.. Type H1..,H2..,H3..,H4..

额定输出扭矩 Nominal Output Torques
规格1...22 Sizes 1...22

传动比iN,额定输出扭矩T_{2N} Transmission ratios iN, nominal output torques T_{2N}

iN	机座号 Sizes 1	2	3	4	5	6	7	8	9	10	11	12	13	14	15	16	17	18	19	20	21	22
	额定输出扭矩T_{2N} (kNm) nominal output torques T_{2N} (kNm)																					
1.25	0.79		2.6		7		13.3		21.5													
1.4	0.83		2.7		7.2		13.9		22.3													
1.6	0.87		2.9		7.5		14.2		23.6		40		63									
1.8	0.91		2.4		7.7		15.2		24.4		41.4		66.3									
2	0.93		2.5		8.2		15.5		25		42.7		68.2		121							
2.24	0.96		2.5		8.4		15.5		25		44		70.3		122							
2.5	1		2.6		8.4		15.5		25		44		72		110							
2.8	1		2.7		8.4		14.9		23.7		44		72		113		171					
3.15	1		2.7		8.4		15.2		24.5		41.9		68.4		116		173					
3.55	1		2.8		8.3		15.5		24.9		43.7		69.6		118		173					
4	1		2.8		8.4		15.5		25		44		70.8		122		173		245			
4.5	0.82		2.2		6.7		13.8		21.4		40		57.6		102		146		216			
5	0.78		2.1		6.3		12		20.5		33.7		54.5		88.8		124		174			
5.6	0.62		2		6		11.4		17.5		31.8		51.8		84.5		118		150			
6.3			3.5	6.3	10.5		19		31.5		55.5		86		143		195		292			
7.1			3.5	6.3	10.5		19		31.5		55.5		86		143	160	195	230	292	335	410	
8			3.5	6.3	10.5	13.5	19	24	31.5	39.5	55.5	69	86	107	143	160	195	230	292	335	410	458
9			3.5	6.3	10.5	13.5	19	24	31.5	39.5	55.5	69	86	107	143	160	195	230	292	335	410	458
10			3.5	6.3	10.5	13.5	19	24	31.5	39.5	55.5	69	86	107	143	160	195	230	292	335	410	458
11.2			3.5	6.3	10.5	13.5	19	24	31.5	39.5	55.5	69	86	107	143	160	195	230	292	335	410	458
12.5			3.5	6.3	10.5	13.5	19	24	31.5	39.5	55.5	69	86	107	143	160	195	230	292	335	410	458
14			3.5	6.3	10.5	13.5	19	24	31.5	39.5	55.5	69	86	107	143	160	195	230	292	335	410	458
16			3.5	6.3	10.5	13.5	19	24	31.5	39.5	55.5	69	86	107	143	160	195	230	292	335	410	458
18			3.5	6.3	10.5	13.5	19	24	31.5	39.5	55.5	69	86	107	143	160	195	230	292	335	410	458
20			3.5	6.3	10.5	13.5	19	24	31.5	39.5	55.5	69	86	107	143	160	195	230	292	335	410	458
22.4			3.5	6.2	10.2	13.5	18.6	24	31	39.5	54.5	69	88	107	153	160	200	230	300	335	420	458
25					11	13.5	20.5	24	34	39.5	60	69	88	107	153	173	200	240	300	345	420	470
28					11	13	20.5	24	34	38.9	60	67.8	88	109	153	173	200	240	300	345	420	470
31.5						14.5	20.5	23.5	34	43	60	75	88	109	153	173	200	240	300	345	420	470
35.5						14.5	20.5	25.5	34	43	60	75	88	109	153	173	200	240	300	345	420	470
40						14.5	20.5	25.5	34	43	60	75	88	109	153	173	200	240	300	345	420	470
45						14.5	20.5	25.5	34	43	60	75	88	109	153	173	200	240	300	345	420	470
50						14.5	20.5	25.5	34	43	60	75	88	109	153	173	200	240	300	345	420	470
56						14.5	20.5	25.5	34	43	60	75	88	109	153	173	200	240	300	345	420	470
63						14.5	20.5	25.5	34	43	60	75	88	109	153	173	200	240	300	345	420	470
71						14.5	20.5	25.5	34	43	60	75	88	109	153	173	200	240	300	345	420	470
80						14.5	20.5	25.5	34	43	60	75	88	109	153	173	200	240	300	345	420	470
90						14.5	20	25.5	33.5	43	60	75	88	109	153	173	200	240	290	345	410	470
100						14.5	20.5	25.5	34	43	60	75	88	109	153	173	200	226	300	335	420	465
112						14.1	20.5	25.2	34	42	60	75	88	109	153	173	200	240	300	345	420	470
125							20.5	25.5	34	43	60	75	88	109	153	173	200	240	300	345	420	470
140							20.5	25.5	34	43	60	75	88	109	153	173	200	240	300	345	420	470
160							20.5	25.5	34	43	60	75	88	109	153	173	200	240	300	345	420	470
180							20.5	25.5	34	43	60	75	88	109	153	173	200	240	300	345	420	470
200							20.5	25.5	34	43	60	75	88	109	153	173	200	240	300	345	420	470
224							20.5	25.5	34	43	60	75	88	109	153	173	200	240	300	345	420	470
250							20.5	25.5	34	43	60	75	88	109	153	173	200	240	300	345	420	470
280							20.5	25.5	34	43	60	75	88	109	153	173	200	240	300	345	420	470
315							20.5	25.5	34	43	60	75	88	109	153	173	200	240	300	345	420	470
355							19.6	25.5	33	43	59	75	88	109	140	173	192	240	290	345	410	470
400								25.5		43		75		109		158		223		335		465
450								24.8		41.6		74		109								

直交轴齿轮箱 Bevel–helical Gear Units
类型B2..,B3..,B4.. Types B2..,B3..,B4..

额定输出扭矩 Nominal Output Torques
规格1...22 Sizes 1...22

iN	传动比iN,额定输出扭矩T_{2N} Transmission ratios iN, nominal output torques T_{2N}																					
	机座号 Sizes																					
	1	2	3	4	5	6	7	8	9	10	11	12	13	14	15	16	17	18	19	20	21	22
	额定输出扭矩T_{2N} (kNm) nominal output torques T_{2N} (kNm)																					
5	1.15	2	3.1	5.8	9.4		17.8		28		43		66		122							
5.6	1.15	2	3.1	5.8	9.4		17.8		28		45		67		122	135	195					
6.3	1.15	2	3.1	5.8	9.4	12	17.8	22.3	28	35.6	47	55	71	82	130	141	195					
7.1	1.15	2	3.1	5.8	9.4	12	17.8	22.3	28	35.6	49	57	73	84	132	145	195	230				
8	1.15	2	3.1	5.8	9.4	12	17.8	22.3	28	35.6	50.5	59	77	88	132	148	195	230				
9	1.15	2	3.1	5.8	9.4	12	17.8	22.3	28	35.6	50.5	61	78	91	132	148	195	230				
10	1.15	2	3.1	5.8	9.4	12	17.8	22.3	28	35.6	50.5	62	78	95	132	148	195	230				
11.2	1.15	2	3.1	5.8	9.4	12	17.8	22.3	28	35.6	50.5	62	78	97.5	132	148	195	230				
12.5	1.15	2	3.1	5.5	9.4	12	17	22.3	28	35.6	50.5	62	78	97.5	132	148	195	230	250		340	
14	1.15	2	3.1	6	9.8	12	18.2	22.3	29.5	35.6	53	62	80	97.5	137	148	195	230	262	295	360	405
16	1.1	1.95	3.1	6.2	10.2	12	19.1	21.5	31	35.6	56	62	83	97.5	142	154	200	230	275	308	380	422
18	1.03	1.8	3	6.4	10.6	12.6	19.8	23.1	32.5	37.5	58	65	85	100	148	160	200	240	288	320	400	438
20			3.6	6.6	11	13.2	20.5	23.9	34	39.3	60	68	88	103	153	167	200	240	300	332	420	455
22.4			3.6	6.6	11	13.8	20.5	24.8	34	41	60	72	88	106	153	173	200	240	300	345	420	470
25			3.6	6.6	11	14.5	20.5	25.5	34	43	60	75	88	109	153	173	200	240	300	345	420	470
28			3.6	6.6	11	14.5	20.5	25.5	34	43	60	75	88	109	153	173	200	240	300	345	420	470
31.5			3.6	6.6	11	14.5	20.5	25.5	34	43	60	75	88	109	153	173	200	240	300	345	420	470
35.5			3.6	6.6	11	14.5	20.5	25.5	34	43	60	75	88	109	153	173	200	240	300	345	420	470
40			3.6	6.6	11	14.5	20.5	25.5	34	43	60	75	88	109	153	173	200	240	300	345	420	470
45			3.6	6.6	11	14.5	20.5	25.5	34	43	60	75	88	109	153	173	200	240	300	345	420	470
50			3.6	6.6	11	14.5	20.5	25.5	34	43	60	75	88	109	153	173	200	240	300	345	420	470
56			3.6	6.6	11	14.5	20.5	25.5	34	43	60	75	88	109	153	173	200	240	300	345	420	470
63			3.6	6.6	11	14.5	20	25.5	34	43	60	75	88	109	153	173	200	240	300	345	420	470
71			3.6	6.6	11	14.5	20	25.5	34	43	60	75	88	109	153	173	200	240	300	345	420	470
80					11	14	20.5	25.2	34	43	60	75	88	109	153	173	200	240	300	345	420	470
90					11	14	20.5	25.2	34	43	60	75	88	109	153	173	200	240	300	345	420	470
100					11	14.5	20.5	25.5	34	43	60	75	88	109	153	173	200	240	300	345	420	470
112					11	14.5	20.5	25.5	34	43	60	75	88	109	153	173	200	240	300	345	420	470
125					11	14.5	20.5	25.5	34	43	60	75	88	109	153	173	200	240	300	345	420	470
140					11	14.5	20.5	25.5	34	43	60	75	88	109	153	173	200	240	300	345	420	470
160					11	14.5	20.5	25.5	34	43	60	75	88	109	153	173	200	240	300	345	420	470
180					11	14.5	20.5	25.5	34	43	60	75	88	109	153	173	200	240	300	345	420	470
200					11	14.5	20.5	25.5	34	43	60	75	88	109	153	173	200	240	300	345	420	470
224					11	14.5	20.5	25.5	34	43	60	75	88	109	153	173	200	240	300	345	420	470
250					11	14.5	20.5	25.5	34	43	60	75	88	109	153	173	200	240	300	345	420	470
280					11	14.5	20.5	25.5	34	43	60	75	88	109	153	173	200	240	300	345	420	470
315					11	14.5	20.5	25.5	34	43	60	75	88	109	153	173	200	240	300	345	420	470
355						14.5		25.5		43		75		109		173		240		345		470
400						14.5		25.5		43		75		109								

平行轴齿轮箱 Helical Gear Units
类型H1..,H2..,H3..,H4.. Type H1..,H2..,H3..,H4..

实际速比 Actual Ratios
规格1...11 Sizes 1...11

iN	实际速比 i Actual Ratios i										
	齿轮箱规格 Gear unit size										
	1	2	3	4	5	6	7	8	9	10	11
1.25	1.25		1.243		1.256		1.263		1.27		
1.4	1.415		1.371		1.378		1.389		1.4		
1.6	1.605		1.594		1.588		1.606		1.625		1.636
1.8	1.829		1.829		1.839		1.774		1.8		1.806
2	2		2		2.034		1.966		2		2
2.24	2.194		2.194		2.259		2.308		2.231		2.222
2.5	2.536		2.536		2.52		2.583		2.5		2.48
2.8	2.808		2.808		2.826		2.8		2.741		2.783
3.15	3.125		3.125		3.19		3.13		3.208		3.08
3.55	3.5		3.5		3.591		3.524		3.591		3.478
4	3.95		3.95		4.05		4		4.05		3.905
4.5	4.476		4.435		4.619		4.4		4.381		4.421
5	5.053		4.952		4.9		4.905		4.947		5.15
5.6	5.571		5.579		5.556		5.526		5.684		5.474
6.3			6.232	6.319	6.286		6.088		6.26		6.246
7.1			7.099	6.857	7.213		7..048		7.247		6.9
8			7.765	7.778	7.889	7.792	7.799	7.676	8.018	7.848	7.644
9			8.516	8.485	8.652	8.94	8.66	8.887	8.904	9.085	8.974
10			9.845	9.722	10.002	9.778	9.66	9.833	9.932	10.053	10.046
11.2			10.9	10.694	11.075	10.724	10.648	10.92	11.138	11.163	10.889
12.5			12.132	12.444	12.326	12.397	11.807	12.18	12.574	12.452	12.174
14			13.588	13.865	13.806	13.726	13.939	13.426	14.152	13.964	13.704
16			15.335	15.556	15.581	15.278	15.717	14.887	15.962	15.765	15.556
18			17.378	17.602	17.493	17.111	17.598	17.576	18.204	17.743	17.111
20			19.616	19.444	19.534	19.311	19.742	19.817	19.312	20.012	19.074
22.4			21.63	22.037	22.006	21.681	20.982	22.189	21.895	22.824	21.491
25					25.011	24.212	25.54	24.892	25.439	24.212	24.706
28					28.49	27.275	27.711	26.456	29.187	27.451	28.602
31.5					31.161	30.999	31.433	32.202	31.924	31.894	31.648
35.5					34.177	35.312	34.291	34.94	35.013	36.593	35.144
40					39.508	38.622	39.292	39.633	40.474	40.024	39.2
45					43.745	42.36	43.221	43.236	44.816	43.897	43.21
50					48.689	48.967	50.293	49.542	49.881	50.744	47.911
56					54.532	54.22	56.033	54.496	55.866	56.187	56.566
63					61.543	60.347	62.867	63.413	63.049	62.537	63.778
71					69.742	67.589	71.139	70.651	70.787	70.041	71.414
80					78.723	76.279	78.583	79.267	79.049	79.046	80.111
90					86.806	86.44	89.061	89.696	89.05	88.748	85.146
100						97.572	101.554	99.083	101.21	99.106	103.639
112						107.59	115.256	112.294	115.29	111.645	112.45
125							125.733	128.046	126.098	126.89	127.556
140							143.985	145.322	138.301	144.542	139.152
160							158.251	158.533	159.874	158.093	159.444
180							174.63	181.546	177.022	173.392	175.389
200							193.629	199.533	197.028	200.439	204.089
224							228.606	220.185	220.671	221.938	227.382
250							257.753	244.141	249.043	247.02	255.111
280							288.615	288.242	282.219	276.663	288.678
315							305.352	324.993	318.563	312.234	318.889
355							344.112	363.906	351.273	353.827	361.407
400								385.01		399.393	
450								433.881		440.402	

平行轴齿轮箱 Helical Gear Units
类型H1..,H2..,H3..,H4.. Types H1..,H2..,H3..,H4..

实际速比 Actual Ratios
规格12...22 Sizes 12...22

实际速比 i Actual Ratios i											
齿轮箱规格 Gear unit size											iN
12	13	14	15	16	17	18	19	20	21	22	
											1.25
											1.4
	1.588										1.6
	1.839										1.8
	2.034		2		2		1.967				2
	2.259		2.231		2.25		2.296				2.24
	2.52		2.481		2.481		2.56				2.5
	2.826		2.76		2.76		2.87				2.8
	3.208		3.087		3.087		3.238				3.15
	3.591		3.476		3.476		3.45				3.55
	4.05		3.947		3.947		3.944				4
	4.619		4.579		4.526		4.4				4.5
	4.9		5.1		4.9		4.95				5
	5.556		5.778		4.556		5.7				5.6
	6.41		6.449		6.154		6.41		6.5		6.3
	7.1		7.12	7.316	7.125	7.147	7.1	7.312	7.2	7.265	7.1
7.941	7.889	7.944	7.882	8.076	7.884	8.274	7.889	8.1	8	8.047	8
8.772	8.799	8.8	8.758	8.941	8.755	9.155	8.799	9	8.923	8.941	9
9.718	9.861	9.778	9.774	9.935	9.765	10.167	9.788	10.038	9.926	9.973	10
11.41	10.811	10.906	10.967	11.087	10.951	11.34	10.887	11.167	11.04	11.094	11.2
12.773	12.655	12.222	12.139	12.44	12.432	12.717	12.176	12.42	12.348	12.339	12.5
13.844	14.164	13.399	13.708	13.769	13.915	14.438	13.712	13.891	13.905	133.801	14
15.478	15.975	15.685	15.389	15.55	15.694	16.159	15.57	15.643	15.789	15.541	16
17.423	17.28	17.556	17.424	17.457	17.899	18.225	18.061	17.763	18.316	17.647	18
19.778	19.515	19.8	20.297	19.765	18.988	20.786	20.117	20.605	20.4	20.471	20
21.756	22.02	21.418	21.374	23.024	20.93	22.05	21.782	22.95	22.368	22.8	22.4
24.251	25.372	24.187	24.716	24.245	24.202	24.306	25.283	24.85	25.837	25	25
27.325	29.373	27.292	27.304	28.036	26.736	28.106	28.006	28.844	28.523	28.877	28
31.412	32.501	31.447	30.248	30.971	29.619	31.048	31.117	31.95	31.579	31.879	31.5
36.366	36.092	36.406	35.514	34.311	34.776	34.397	34.708	35.5	35.088	35.294	35.5
40.238	40.257	40.283	39.756	40.284	38.929	40.385	38.897	39.596	39.158	39.216	40
44.683	45.147	44.733	43.09	45.096	42.194	45.208	42.642	44.375	43.936	43.765	45
49.84	50.968	49.896	48.175	48.878	47.174	49	49.917	48.648	48.632	49.105	50
54.938	57.365	55.957	54.229	54.647	53.102	54.783	55.87	56.948	54.92	54.353	56
60.916	64.699	63.171	61.557	61.514	60.278	61.667	63.013	63.739	61.654	61.381	63
71.919	73.789	71.1	67.713	69.826	66.306	70	68.162	71.888	69.806	68.908	71
81.089	78.278	80.19	75.481	76.809	73.912	77	76.974	77.762	81.316	78.019	80
90.798	88.75	91.457	85.046	85.62	83.279	85.833	88.439	87.816	86.427	90.882	90
101.856	103.114	97.02	97.768	96.471	95.735	96.711	100.079	100.895	99.02	96.594	100
108.257	118.306	110	113.186	110.901	110.833	111.176	115.862	114.174	109.386	110.67	112
131.769	129.398	127.803	125.238	128.39	122.634	128.71	128.198	132.18	121.182	122.255	125
142.973	141.92	146.633	139.074	142.06	136.183	142.414	142.362	146.254	142.279	135.439	140
162.178	164.058	160.38	155.125	157.756	151.9	158.148	158.792	162.413	159.273	159.017	160
176.921	181.654	175.901	170.993	175.962	167.438	176.4	178.079	181.156	172.632	178.011	180
202.722	202.184	203.339	189.597	193.963	185.656	194.444	201.04	203.16	193.004	192.941	200
222.994	226.446	225.149	223.845	215.065	219.192	215.6	226.272	229.355	217.257	215.711	224
259.484	255.56	250.594	252.385	253.914	247.139	254.545	255.201	258.141	246.617	242.817	250
289.1	286.925	280.665	282.605	286.288	276.73	278	291.058	291.144	271.278	275.63	280
324.356	320.413	316.751	317.021	320.566	310.431	321.364	308.761	332.052	302.399	303.193	315
367.034	360.951	355.625	336.946	359.606	329.942	360.5	350.069	352.249	340.72	337.975	355
405.444		397.131		382.207		383.158		399.375		380.805	400
459.504		447.376									450

直交轴齿轮箱 Bevel-helical Gear Units
类型B2..,B3..,B4.. Type B2..,B3..,B4..

实际速比 Actual Ratios
规格1...11 Sizes 1...11

实际速比 i Actual Ratios i											
iN	齿轮箱规格 Gear unit size										
	1	2	3	4	5	6	7	8	9	10	11
5	4.98	5.043	4.895	4.936	5.006		4.865		5.002		4.897
5.6	5.566	5.636	5.471	5.48	5.488		5.333		5.483		5.534
6.3	6.455	6.526	6.334	6.296	6.386	6.205	6.206	6.135	6.381	6.271	6.296
7.1	7.068	7.158	6.947	6.959	7.058	6.802	6.86	6.725	7.053	6.875	7.037
8	7.668	7.865	7.536	7.549	7.657	7.915	7.88	7.825	8.101	8	7.994
9	8.829	8.941	8.678	8.693	8.817	8.749	8.569	8.649	8.81	8.842	8.693
10	10.027	10.154	9.855	9.872	10.108	9.49	9.823	9.935	10.099	10.157	9.965
11.2	10.938	11.077	10.751	10.769	10.923	10.928	10.615	10.804	10.914	11.045	10.769
12.5	12.458	12.615	10.244	12.034	12.703	12.528	12.433	12.385	12.554	12.662	12.334
14	14.005	14.182	13.765	13.484	13.964	13.538	13.515	13.385	14.137	13.683	13.821
16	15.441	15.36	15.176	15.601	15.835	15.826	16.275	15.773	15.952	15.693	15.522
18	17.595	17.818	17.294	17.482	17.407	17.307	17.692	17.041	17.963	17.724	17.393
20			19.336	19.614	19.645	19.729	19.948	20.648	20.259	19.94	19.744
22.4			21.609	21.919	21.654	21.575	22.146	22.308	22.208	22.52	21.643
25			25.021	25.38	25.421	24.349	25.446	25.152	25.843	25.4	25.185
28			27.442	27.836	27.881	27.211	28.125	27.923	28.563	27.842	27.836
31.5			29.769	30.196	30.245	31.508	30.509	32.084	30.985	32.4	31.975
35.5			34.279	34.771	34.827	34.557	35.131	35.461	35.679	35.811	34.771
40			38.928	39.487	39.551	37.486	39.896	38.468	40.902	38.846	39.861
45			42.467	43.077	43.146	43.166	43.523	44.296	44.202	44.732	43.077
50			48.365	49.06	49.139	49.021	49.568	50.304	50.341	51.28	49.06
56			54.371	55.152	55.24	53.477	55.723	54.877	56.592	55.417	55.152
63			59.947	60.808	60.906	60.904	61.438	62.499	62.396	63.114	60.808
71			68.312	69.293	69.404	68.467	70.011	70.259	71.102	70.951	69.293
80					77.598	75.489	79.267	77.465	79.497	78.228	80.949
90					86.72	86.022	88.585	88.274	88.842	89.143	89.869
100					100.413	96.178	102.572	99.945	102.869	99.667	103.259
112					110.13	107.484	112.498	111.694	112.824	111.384	114.129
125					119.466	124.455	122.035	129.33	122.389	128.971	123.804
140					137.567	136.499	140.525	141.846	140.933	141.452	142.562
160					156.225	148.071	159.585	153.871	160.047	153.443	161.897
180					170.427	170.506	174.092	177.184	174.597	176.692	176.615
200					194.098	193.631	198.272	201.215	198.847	200.656	201.145
224					218.199	211.234	222.891	219.508	223.537	218.898	226.121
250					240.578	240.572	245.752	249.995	246.464	249.3	249.313
280					274.147	270.443	280.042	281.036	280.855	280.256	284.101
315					302.121	298.181	308.618	309.861	309.513	309	313.091
355						339.788		353.097		352.116	
400						374.46		389.127		388.046	
450											

直交轴齿轮箱 Bevel–helical Gear Units　　实际速比 Actual Ratios
类型B2..,B3..,B4..　Type B2..,B3..,B4..　　规格12...22　Sizes 12...22

实际速比 i　Actual Ratios i											
齿轮箱规格 Gear unit size											iN
12	13	14	15	16	17	18	19	20	21	22	
	4.967		4.963								5
	5.613		5.609	5.63	5.514						5.6
6.226	6.386	6.156	6.34	6.362	6.234						6.3
7.036	7.138	6.957	7.132	7.192	7.012	7.239					7.1
8.005	8.108	7.915	8.101	8.09	7.965	8.143					8
8.947	8.817	8.847	8.81	9.19	8.662	9.25					9
10.164	10.108	10.049	10.099	9.993	9.93	10.059					10
11.052	10.923	10.928	10.914	11.456	10.731	11.531					11.2
12.67	12.482	12.528	12.172	12.38	12.77	12.462	12.062		12.256		12.5
13.692	13.721	13.538	13.81	13.382	13.79	14.654	13.709	13.698	13.902	13.719	14
15.888	16.354	15.552	15.215	15.665	16.226	16.014	15.192	15.64	15.436	15.538	16
17.57	17.978	17.007	17.262	17.29	17.522	18.62	17.267	17.252	17.51	17.279	18
19.995	20.276	20.376	19.379	19.581	19.762	20.348	19.607	19.698	19.883	19.57	20
22.114	22.226	22.282	21.9	21.982	22.333	22.95	22.158	22.368	22.47	22.222	22.4
25.103	25.864	25.131	24.916	24.842	25.409	25.936	25.048	25.278	25.4	25.113	25
27.517	28.587	27.548	27.847	28.263	28.398	29.507	28.175	28.576	28.571	28.389	28
32.021	32.838	32.057	31.634	31.588	32.259	32.979	32.005	32.143	32.456	31.933	31.5
35.392	35.709	35.432	34.4	35.883	35.08	37.463	34.804	36.513	35.294	36.275	35.5
40.654	40.936	40.7	39.435	39.021	40.215	40.738	39.899	39.706	40.461	39.446	40
44.209	44.238	44.259	42.617	44.732	43.46	46.702	43.117	45.518	43.725	45.221	45
50.681	50.383	50.737	48.536	48.341	49.496	50.469	49.106	49.19	49.798	48.869	50
54.769	56.639	54.831	54.562	55.055	55.641	57.479	55.203	56.022	55.981	55.656	56
62.376	62.448	62.446	60.158	61.892	61.348	64.616	60.865	62.978	61.722	62.567	63
70.121	71.161	70.2	68.553	68.239	69.909	71.243	69.358	69.438	70.335	68.984	71
77.313	82.118	77.4	78.131	77.761	76.506	81.184	79.977	79.127	77.639	78.61	80
88.101	90.016	88.2	85.645	88.626	83.865	88.846	87.67	91.242	87.739	86.772	90
102.921	104.75	101.78	99.664	97.15	97.593	97.391	102.02	100.017	99.821	98.061	100
114.262	115.777	111.569	110.155	113.052	107.865	113.333	112.759	116.389	111.565	111.565	112
131.287	125.592	129.831	126.535	124.952	123.904	125.263	129.526	128.641	126.733	124.69	125
145.106	144.621	143.498	137.599	143.532	134.739	143.889	140.851	147.769	137.815	141.643	140
157.408	165.791	155.663	157.741	156.082	154.462	156.471	161.47	160.69	157.989	154.029	160
181.258	179.166	179.284	170.467	178.93	166.923	179.375	174.496	184.212	170.735	176.576	180
205.841	204.05	205.487	194.143	193.365	190.107	193.846	198.732	199.073	194.448	190.821	200
224.554	229.386	222.065	218.249	220.222	213.712	220.769	223.408	226.722	218.592	217.324	224
255.742	252.913	252.907	240.634	247.566	235.631	248.182	246.322	254.874	241.012	244.309	250
287.497	288.204	284.31	274.21	272.957	268.51	273.636	280.692	281.015	274.641	269.366	280
316.984	317.612	313.47	302.191	311.045	295.909	311.818	309.334	320.226	302.666	306.952	315
361.214		357.21		342.784		343.636		352.902		338.273	355
398.073		393.66									400
											450

平行轴齿轮箱 Helical Gear Units　　转动惯量J1 Mass Moments of Inertia J1
类型H1..,H2..,H3..,H4..　Type H1..,H2..,H3..,H4..　　规格1...11　Sizes 1...11

转动惯量J_2（单位kgm²）是指相对于齿轮箱输出轴d_2的转动惯量，可按下式计算：$J_2=iN^2 \times J_1$。
转动惯量J_1（单位kgm²）是指相对于齿轮箱输入轴d_1的转动惯量，输入轴不带风扇。
如果输入轴d_1上带有风扇，则应加上J_L。
The mass moment of inertia J_2 in kgm² refers to the output shaft d_2 of a gear unit and is calculated with the following. formula: $J_2=iN^2 \times J_1$.
The mass moment of inertia J_L in kgm² refers to the input shaft d_1 of a gear unit without fan. For shaft d with fan, J_L has to be added.

转动惯量J_1（单位kgm²）是指相对于减速机输出轴d_1的转动惯量 Mass moment of inertia J_1 in kgm² refering to shaft d_1											
iN	齿轮箱规格Gear unit size										
	1	2	3	4	5	6	7	8	9	10	11
1.25	0.0048		0.0285		0.157		0.4228		0.9271		
1.4	0.0042		0.0259		0.1432		0.3849		0.8413		
1.6	0.0037		0.0244		0.1249		0.3345		0.7272		1.7511
1.8	0.0033		0.0197		0.1088		0.3045		0.659		1.5889
2	0.003		0.0182		0.0991		0.2769		0.596		1.4383
2.24	0.0028		0.0167		0.0901		0.239		0.5376		1.2975
2.5	0.0023		0.0148		0.0816		0.2159		0.483		1.1653
2.8	0.0021		0.0134		0.0738		0.201		0.4432		1.0408
3.15	0.0015		0.0092		0.05		0.1402		0.3105		0.8423
3.55	0.0013		0.0081		0.0437		0.1225		0.2728		0.7361
4	0.0012		0.007		0.038		0.1058		0.2373		0.6465
4.5	0.00087		0.0052		0.0297		0..0861		0.1996		0.4956
5	0.00074		0.0045		0.0276		0.0748		0.1707		0.4062
5.6	0.00065		0.0038		0.0233		0.064		0.141		0.3747
J_L			0.06		0.045		0.1		0.1		0.29
6.3			0.0055	0.0149	0.0329		0.0907		0.1995		0.5118
7.1			0.0046	0.0134	0.0275		0.0746		0.164		0.4473
8			0.0041	0.0114	0.0245	0.0393	0.0655	0.1092	0.1438	0.2364	0.3906
9			0.0037	0.0102	0.0218	0.0323	0.0574	0.0884	0.126	0.1916	0.3178
10			0.003	0.0086	0.0182	0.0285	0.05	0.0767	0.1097	0.1664	0.276
11.2			0.0026	0.0076	0.0159	0.0252	0.0441	0.0665	0.094	0.1443	0.2486
12.5			0.002	0.0053	0.0116	0.0207	0.0334	0.0574	0.0712	0.1244	0.1899
14			0.0017	0.0045	0.01	0.0179	0.0266	0.0501	0.0604	0.1057	0.1615
16			0.0014	0.0038	0.0084	0.0133	0.0224	0.0383	0.0508	0.0804	0.1348
18			0.0012	0.0032	0.0071	0.0113	0.0189	0.0302	0.0416	0.0676	0.1162
20			0.00099	0.0028	0.006	0.0094	0.016	0.0252	0.0382	0.0565	0.0992
22.4			0.00086	0.0023	0.005	0.0079	0.0147	0.0211	0.032	0.046	0.0833
25						0.0067		0.0178		0.0421	
28						0.0056		0.0163		0.0351	
J_L				0.006	0.01	0.01	0.045	0.045	0.045	0.045	0.1
22.4											
25					0.0065		0.0162		0.0391		0.1026
28					0.0054		0.0144		0.0325		0.0833
31.5					0.0048	0.0069	0.0121	0.0173	0.0289	0.0414	0.0724
35.5					0.0042	0.0057	0.0107	0.0153	0.0256	0.0342	0.0629
40					0.0034	0.005	0.0089	0.0128	0.0215	0.0303	0.0545
45					0.003	0.0044	0.0078	0.0113	0.0189	0.0268	0.0481
50					0.0023	0.0036	0.0057	0.0093	0.0136	0.0223	0.0359
56					0.0019	0.0031	0.0049	0.0082	0.0117	0.0196	0.0283
63					0.0016	0.0024	0.0041	0.006	0.0099	0.0142	0.0238
71					0.0012	0.002	0.0032	0.0051	0.0074	0.0121	0.019
80					0.001	0.0017	0.0028	0.0043	0.0062	0.0102	0.016
90					0.00087	0.0013	0.0023	0.0034	0.0052	0.0077	0.0145
100						0.0011		0.0029		0.0065	
112						0.0009		0.0024		0.0054	
J_L					0.006	0.006	0.01	0.01	0.02	0.02	0.045
100							0.0033		0.0067		0.0175
112							0.0027		0.0055		0.0156
125							0.0024	0.0033	0.0049	0.0068	0.0131
140							0.002	0.0028	0.0043	0.0056	0.0116
160							0.0018	0.0025	0.0035	0.005	0.0097
180							0.0015	0.0021	0.003	0.0044	0.0085
200							0.0012	0.0018	0.0023	0.0035	0.0059
224							0.00097	0.0016	0.0019	0.0031	0.0051
250							0.00081	0.0013	0.0016	0.0023	0.0043
280							0.00065	0.00098	0.0013	0.002	0.0035
315							0.0006	0.00082	0.0011	0.0016	0.003
355							0.0005	0.00066	0.00096	0.0014	0.0025
400								0.0006		0.0011	
450								0.0005		0.00097	

平行轴齿轮箱 Helical Gear Units　　转动惯量J1 Mass Moments of Inertia J1
类型H1..,H2..,H3..,H4..　Type H1..,H2..,H3..,H4..　　规格12...22　Sizes 12...22

转动惯量J_2（单位kgm²）是指相对于齿轮箱输出轴d_2的转动惯量，可按下式计算：$J_2=iN^2 \times J_1$。
转动惯量J_1（单位kgm²）是指相对于齿轮箱输入轴d_1的转动惯量，输入轴不带风扇。
如果输入轴d_1上带有风扇，则应加上J_L。
The mass moment of inertia J_2 in kgm² refers to the output shaft d_2 of a gear unit and is calculated with the following. formula: $J_2=iN^2 \times J_1$.
The mass moment of inertia J_L in kgm² refers to the input shaft d_1 of a gear unit without fan. For shaft d with fan, J_L has to be added.

转动惯量J_1（单位kgm²）是指相对于减速机输出轴d_1的转动惯量 Mass moment of inertia J_1 in kgm² refering to shaft d_1											
齿轮箱规格Gear unit size											iN
12	13	14	15	16	17	18	19	20	21	22	
											1.25
											1.4
	3.7389										1.6
	3.2189										1.8
	2.9044		6.8655		11.6548		21.8584				2
	2.6113		6.1491		10.3549		18.6429				2.24
	2.337		5.5216		9.3831		16.6673				2.5
	2.0794		4.9573		8.4273		14.7965				2.8
	1.6719		3.9096		6.7095		11.9834				3.15
	1.4732		3.4057		5.8542		11.1368				3.55
	1.2855		2.9306		5.047		9.5179				4
	0.9652		2.3019		4.0029		7.8709				4.5
	0.8932		1.9601		3.5545		6.6571				5
	0.7557		1.6568		3.0066		5.5019				5.6
	0.29		0.69		0.69		0.69				J_L
	1.0873		2.6799		5.2845		10.5289				6.3
	0.948		2.3538	2.8931	4.3679	5.7591	9.2492	11.3721	12.2959		7.1
0.6361	0.8255	1.2839	2.0651	2.5287	3.8397	4.722	8.1117	9.9364	10.7071	13.215	8
0.5491	0.7172	1.1082	1.808	2.2077	3.3666	4.129	7.0946	8.6683	9.3069	11.4516	9
0.4736	0.6211	0.9553	1.5782	1.9236	2.9408	3.6012	6.2359	7.5421	8.1419	9.9054	10
0.378	0.554	0.8216	1.3718	1.671	2.556	3.1293	5.4896	6.5975	7.1415	8.6256	11.2
0.3241	0.4217	0.7014	1.1198	1.4455	2.0404	2.7059	4.4208	5.7819	5.6707	7.5325	12.5
0.2895	0.3642	0.6231	0.9578	1.1799	1.7645	2.1567	3.7953	4.6544	4.8559	5.9832	14
0.2226	0.3117	0.4721	0.8265	1.005	1.5114	1.8573	3.2226	3.9795	4.1218	5.1024	16
0.1872	0.2761	0.4044	0.673	0.8639	1.2153	1.5843	2.5603	3.3655	3.2191	4.3129	18
0.1549	0.233	0.3434	0.5438	0.7022	1.1227	1.2714	2.2165	2.6665	2.7632	3.3611	20
0.1328		0.3032		0.5653		1.1726		2.3021		2.8777	22.4
0.1125		0.2542									25
0.0938											28
0.1	0.29	0.29	0.29	0.29	0.69	0.69	0.69	0.69	0.69	0.69	J_L
	0.2807		0.7409		0.8137		1.6434		3.7138		22.4
	0.2287		0.6011	0.7603	0.6552	0.8546	1.3216	1.7165	3.0172	3.809	25
	0.1866	0.2974	0.5232	0.6156	0.5669	0.6857	1.1429	1.3759	2.6255	3.0886	28
0.1105	0.1629	0.2413	0.4553	0.5351	0.4909	0.592	0.9874	1.1871	2.2815	2.6841	31.5
0.0892	0.1421	0.196	0.3689	0.465	0.3943	0.5113	0.8515	1.0232	1.978	2.3293	35.5
0.0773	0.1237	0.1705	0.3198	0.3759	0.3398	0.4091	0.7323	0.8803	1.7091	2.0167	40
0.0668	0.1075	0.1483	0.2896	0.3254	0.3064	0.3516	0.6501	0.7552	1.4696	1.7402	45
0.0577	0.0762	0.1287	0.2106	0.2944	0.2241	0.3165	0.4647	0.6692	1.1988	1.4943	50
0.0507	0.0644	0.1114	0.1782	0.2145	0.1886	0.2322	0.3961	0.4786	1.0146	1.2189	56
0.038	0.0544	0.0793	0.1491	0.1812	0.1569	0.1949	0.3344	0.4073	0.8665	1.0304	63
0.0298	0.042	0.0669	0.1216	0.1515	0.1289	0.1619	0.2818	0.3431	0.67	0.879	71
0.025	0.0385	0.0564	0.1034	0.1235	0.1093	0.133	0.2352	0.2893	0.5346	0.6798	80
0.0199	0.0318	0.0435	0.0865	0.105	0.0911	0.1126	0.1898	0.241	0.4883	0.5418	90
0.0167		0.0398		0.0877		0.0937		0.1943		0.4946	100
0.0152		0.0329									112
0.045	0.045	0.045	0.1	0.1	0.1	0.1					J_L
	0.0396		0.108		0.113		0.2401		0.6098		100
	0.0325		0.0875	0.1089	0.0916	0.1149	0.1936	0.2436	0.5276	0.6147	112
0.0179	0.0287	0.0403	0.076	0.0881	0.0796	0.093	0.1681	0.1962	0.4561	0.5316	125
0.016	0.0253	0.0331	0.066	0.0766	0.0691	0.0808	0.1457	0.1702	0.3653	0.4594	140
0.0134	0.0208	0.0292	0.057	0.0664	0.0598	0.0701	0.1254	0.1474	0.314	0.3677	160
0.0119	0.018	0.0258	0.0498	0.0573	0.0524	0.0606	0.1065	0.1268	0.2809	0.3158	180
0.0099	0.0134	0.0211	0.038	0.0501	0.0393	0.053	0.0811	0.1076	0.2157	0.2825	200
0.0086	0.0113	0.0183	0.0299	0.0382	0.031	0.0398	0.0681	0.082	0.1819	0.217	224
0.0061	0.0095	0.0136	0.025	0.0301	0.0259	0.0314	0.0569	0.0688	0.1506	0.1829	250
0.0052	0.0079	0.0115	0.021	0.0251	0.0218	0.0262	0.0463	0.0574	0.1297	0.1514	280
0.0043	0.0067	0.0096	0.0177	0.0211	0.0184	0.0221	0.0424	0.0467	0.1097	0.1299	315
0.0036	0.0056	0.008	0.0162	0.0177	0.0169	0.0186	0.0363	0.0427	0.0916	0.1103	355
0.0031		0.0068		0.0162		0.017		0.0366		0.092	400
0.0026		0.0056									450

直交轴齿轮箱 Bevel-helical Gear Units　　转动惯量J1 Mass Moments of Inertia J1
类型B2..,B3..,B4..　Type B2..,B3..,B4..　　规格1...11　Sizes 1...11

转动惯量J_2（单位kgm²）是指相对于齿轮箱输出轴d_2的转动惯量，可按下式计算：$J_2=iN^2 \times J_1$。
转动惯量J_1（单位kgm²）是指相对于齿轮箱输入轴d_1的转动惯量，输入轴不带风扇。
如果输入轴d_1上带有风扇，则应加上J_L。
The mass moment of inertia J_2 in kgm² refers to the output shaft d_2 of a gear unit and is calculated with the following. formula: $J_2=iN^2 \times J_1$.
The mass moment of inertia J_L in kgm² refers to the input shaft d_1 of a gear unit without fan. For shaft d with fan, J_L has to be added.

转动惯量J_1（单位kgm²）是指相对于减速机输出轴d_1的转动惯量 Mass moment of inertia J_1 in kgm² refering to shaft d_1											
iN	齿轮箱规格Gear unit size										
	1	2	3	4	5	6	7	8	9	10	11
5	0.0021	0.0049	0.0314	0.0314	0.0707		0.1988		0.4403		1.2743
5.6	0.0019	0.0043	0.0096	0.0262	0.0604		0.1691		0.3744		1.0697
6.3	0.0016	0.0035	0.0076	0.0228	0.0495	0.0805	0.1365	0.2276	0.2988	0.4986	0.8428
7.1	0.0014	0.0033	0.0071	0.0197	0.042	0.0687	0.1207	0.1931	0.2543	0.4229	0.7257
8	0.0012	0.0027	0.0057	0.0152	0.0321	0.0555	0.0875	0.1542	0.1874	0.3346	0.525
9	0.001	0.0023	0.0052	0.0129	0.0295	0.047	0.0786	0.1352	0.1709	0.2837	0.4753
10	0.00084	0.0018	0.0039	0.0104	0.025	0.0363	0.0681	0.0985	0.1456	0.2097	0.4072
11.2	0.00079	0.0017	0.0037	0.0093	0.0214	0.0327	0.059	0.0879	0.1241	0.1897	0.3493
12.5	0.00054	0.0012	0.0028			0.0274		0.0752		0.1599	
14	0.00043	0.00098	0.0023			0.0235		0.065		0.1363	
16	0.0004	0.00082	0.0019								
18	0.00031	0.00063	0.0015								
J_L	0.005	0.006	0.01	0.02	0.045	0.045	0.1	0.1	0.1	0.1	0.29
12.5				0.0073	0.0159		0.0445		0.0995		0.274
14				0.0071	0.0156		0.0436		0.0967		0.2671
16				0.006	0.0136	0.0174	0.0368	0.0487	0.0842	0.1084	0.2344
18				0.0059	0.0133	0.0168	0.0363	0.0474	0.0825	0.104	0.23
20			0.0023	0.0055	0.0124	0.0145	0.0339	0.0393	0.0770	0.0897	0.2146
22.4			0.0021	0.0047	0.0105	0.0141	0.0282	0.0385	0.0657	0.087	0.1822
25			0.0017	0.0039	0.0083	0.013	0.0243	0.0356	0.0534	0.0805	0.1462
28			0.0015	0.0036	0.0077	0.0111	0.0209	0.0296	0.0452	0.0687	0.1286
31.5			0.0013	0.0029	0.0062	0.0087	0.0162	0.0253	0.0348	0.0555	0.0936
35.5			0.0011	0.0024	0.0055	0.008	0.0137	0.0218	0.0315	0.047	0.0837
40			0.00089	0.0019	0.0041	0.0065	0.011	0.0169	0.0265	0.0363	0.072
45			0.00083	0.0018	0.0039	0.0057	0.0098	0.0142	0.0227	0.0326	0.0626
50			0.00057	0.0013	0.003	0.0043	0.0081	0.0114	0.0178	0.0274	0.0469
56			0.00046	0.0011	0.0025	0.004	0.0068	0.0102	0.0146	0.0235	0.0384
63			0.00042	0.00087	0.0021	0.0031	0.0059	0.0084	0.0124	0.0184	0.0326
71			0.00033	0.00067	0.0016	0.0026	0.0047	0.007	0.01	0.015	0.0262
80						0.0021		0.0061		0.0128	
90						0.0016		0.0048		0.0102	
J_L			0.005	0.006	0.01	0.01	0.02	0.02	0.045	0.045	0.1
80					0.0024		0.0057		0.0129		0.035
90					0.0021		0.0049		0.011		0.0291
100					0.0018	0.0024	0.004	0.0058	0.0086	0.0131	0.025
112					0.0016	0.0022	0.0037	0.0049	0.0079	0.0111	0.0215
125					0.0013	0.0018	0.003	0.004	0.0064	0.0087	0.0167
140					0.0011	0.0016	0.0025	0.0038	0.0057	0.0081	0.0141
160					0.00091	0.0013	0.002	0.0031	0.0043	0.0065	0.0113
180					0.00085	0.0011	0.0018	0.0025	0.004	0.0058	0.0101
200					0.00058	0.00092	0.0013	0.002	0.0031	0.0043	0.0083
224					0.00047	0.00086	0.0011	0.0018	0.0025	0.0041	0.007
250					0.00043	0.00059	0.00089	0.0014	0.0021	0.0031	0.006
280					0.00033	0.00047	0.00069	0.0011	0.0016	0.0026	0.0048
315					0.00028	0.00043	0.00058	0.00091	0.0014	0.0021	0.004
355						0.00034		0.00069		0.0016	
400						0.00028		0.00059		0.0014	

直交轴齿轮箱 Bevel–helical Gear Units
类型B2..,B3..,B4.. Type B2..,B3..,B4..

转动惯量J1 Mass Moments of Inertia J1
规格12...22 Sizes 12...22

转动惯量J_2（单位kgm²）是指相对于齿轮箱输出轴d_2的转动惯量，可按下式计算：$J_2=iN^2 \times J_1$。
转动惯量J_1（单位kgm²）是指相对于齿轮箱输入轴d_1的转动惯量，输入轴不带风扇。
如果输入轴d_1上带有风扇，则应加上J_L。
The mass moment of inertia J_2 in kgm² refers to the output shaft d_2 of a gear unit and is calculated with the following. formula: $J_2=iN^2 \times J_1$.
The mass moment of inertia J_L in kgm² refers to the input shaft d_1 of a gear unit without fan. For shaft d with fan, J_L has to be added.

转动惯量J_1（单位kgm²）是指相对于减速机输出轴d_1的转动惯量 Mass moment of inertia J_1 in kgm² refering to shaft d_1											
齿轮箱规格Gear unit size											iN
12	13	14	15	16	17	18	19	20	21	22	
	2.77		6.1753								5
	2.3418		5.3415	6.6007	10.3549						5.6
1.4755	1.8526	3.0962	4.4466	5.6746	8.5744						6.3
1.2273	1.6222	2.5972	3.7296	4.7073	7.1324	9.0369					7.1
0.9645	1.1744	2.05	2.7508	3.9356	5.0109	7.4979					8
0.8231	1.0617	1.7802	2.5048	2.9105	4.5186	5.2942					9
0.6005	0.9214	1.2968	2.1468	2.6398	3.8518	4.7581					10
0.5392	0.7959	1.1653	1.7964	2.2495	3.3164	4.034					11.2
0.4557		1.0001		1.8843		3.4725					12.5
0.3909		0.8634									14
											16
											18
0.29	0.69	0.69	0.69	0.69	0.69	0.69					J_L
	0.6152		1.6952		3.4843		7.8896		8.3877		12.5
	0.6026		1.6558	1.7505	3.4451	3.5988	7.7305	8.0659	8.2186	8.6052	14
0.3029	0.5141	0.6638	1.4797	1.7023	3.0661	3.5397	6.9989	7.84	7.4408	8.3643	16
0.2925	0.5068	0.6456	1.4545	1.5152	3.0418	3.137	6.8398	6.956	7.2717	7.4142	18
0.2527	0.4742	0.5424	1.3716	1.4843	2.8806	3.1004	6.3626	6.8399	6.7643	7.2972	20
0.2461	0.4026	0.5318	1.1459	1.3952	2.4284	2.9267	5.4882	6.4527	5.8027	6.8842	22.4
0.227	0.3196	0.4938	0.9016	1.1644	1.9196	2.4645	4.5614	5.5587	4.8075	5.8965	25
0.1926	0.2714	0.4189	0.7728	0.9159	1.6758	1.9474	3.8203	4.6166	4.0148	4.8809	28
0.1539	0.2004	0.3317	0.5615	0.7842	1.2159	1.6981	2.8212	3.8639	2.9719	4.0729	31.5
0.1349	0.1819	0.2812	0.5062	0.5703	1.0968	1.2332	2.5642	2.855	2.6917	3.0169	35.5
0.0983	0.1539	0.2079	0.4306	0.5137	0.9481	1.1114	2.192	2.5928	2.289	2.7297	40
0.0877	0.1312	0.1882	0.3694	0.4363	0.8188	0.9592	1.8351	2.2138	~1.9182	2.318	45
0.0751	0.1028	0.1587	0.2765	0.3743	0.5713	0.8283	1.4	1.8537	1.4641	1.9429	50
0.0649	0.0853	0.1353	0.2284	0.2802	0.4692	0.5787	1.1439	1.4144	1.1946	1.4832	56
0.0489	0.0725	0.106	0.1956	0.2314	0.4054	0.475	1.0429	1.1553	1.0845	1.2097	63
0.04	0.0585	0.0878	0.1587	0.1981	0.3333	0.4101	0.873	1.0522	0.9051	1.097	71
0.0339		0.0745		0.1605		0.3369		0.8802		0.9147	80
0.0272		0.0601									90
0.1	0.29	0.29	0.29	0.29	0.69	0.69	0.69	0.69	0.69	0.69	J_L
	0.0795		0.2219		0.2276		0.4955		1.41 20		80
	0.0678		0.1883	0.2234	0.1931	0.2307	0.4203	0.5009	1.1776	1.4199	90
0.0358	0.0549	0.0807	0.1507	0.1896	0.1542	0.1956	0.3327	0.4248	0.9261	1.1838	100
0.0297	0.0465	0.0688	0.1323	0.1516	0.1352	0.1561	0.2821	0.336	0.7924	0.9309	112
0.0254	0.0359	0.0556	0.0964	0.133	0.0985	0.1367	0.2085	0.2848	0.5767	0.7962	125
0.0219	0.0323	0.0471	0.0861	0.0969	0.0879	0.0997	0.1887	0.2106	0.519	0.5796	140
0.017	0.0271	0.0364	0.0738	0.0866	0.0752	0.0889	0.1591	0.1905	0.4404	0.5215	160
0.0143	0.0233	0.0327	0.0638	0.0742	0.065	0.076	0.1357	0.1605	0.3778	0.4423	180
0.0114	0.0182	0.0274	0.0481	0.0641	0.049	0.0657	0.1063	0.1368	o.2829	0.3794	200
0.0102	0.0149	0.0235	0.0393	0.0483	0.04	0.0495	0.088	0.1071	0.2335	0.2842	224
0.0084	0.0127	0.0184	0.0333	0.0395	0.0339	0.0404	0.0747	0.0887	0.1998	0.2345	250
0.0071	0.0102	0.0151	0.0267	0.0335	0.0272	0.0343	0.0603	0.0753	0.1619	0.2007	280
0.0061	0.0081	0.0128	0.0217	0.0269	0.0221	0.0275	0.0493	0.0607	0.1289	0.1625	315
0.0048		0.0103		0.0218		0.0223		0.0497		0.1294	355
0.0041		0.0082									400

齿轮箱Gear Units
输出轴d_2上允许的附加径向力[1)]
Permissible Additional Radial Forces on Output Shaft d_2 [1)]
类型H1S.,H2S., H3S.,H4S., B2S., B3S., B4S
Types H1S., H2S., H3S., H4S., B2S., B3S., B4S

作用力在轴端中部
Application of force on centre of shaft end

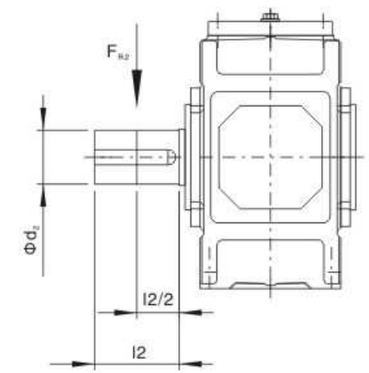

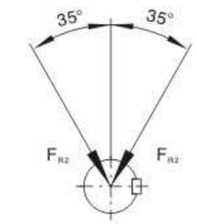

允许的作用力方向
Permissible direction of force

允许的附加径向力F_{R2}（KN），作用于输出轴端中部[3)]
Permissible additional radial forces F_{R2} in kN with application of force on center of shaft end[3)]

类型 Type	布置形式 Design	齿轮箱规格1），4） Gear unit sizes 1）,4																	
		1	2	3	4	5	6	7	8	9	10	11	12	13	14	15	16	17	18
H1SH	A/B	2)	–	2)	–	2)	–	2)	–	2)	–	2)	–	2)	–	2)		2)	
H2S.	A/B/G/H	–	–	8	10	22	22	30	30	30	45	64	64	150	150	140	205	205	205
	C/D	–	–	8	10	13	13	18	18	10	28	35	35	112	112	85	135	135	135
H3S.	A/B/G/H	–	–	–	–	29	29	40	40	40	60	85	85	190	190	185	265	265	265
	C/D	–	–	–	–	18	18	26	26	18	40	50	50	150	150	120	185	185	190
H4S.	A/B	–	–	–	–	–	–	26	26	18	40	50	50	150	150	120	185	185	190
	C/D	–	–	–	–	–	–	40	40	40	60	85	85	190	190	185	265	265	265
B2S.	A/C	7	10	10	13	27	27	37	37	38	55	78	78	160	160	150	210	210	210
	B/D	4	7	9	12	15	15	17	17	10	30	38	38	110	110	75	145	100	100
B3S.	A/C	–	–	9	14	29	29	40	40	40	60	85	85	190	190	185	265	265	265
	B/D	–	–	7	9	18	18	26	26	18	40	50	50	150	150	120	185	185	190
B4S.	A/C	–	–	–	–	29	29	40	40	40	60	85	85	190	190	185	265	265	265
	B/D	–	–	–	–	18	18	26	26	18	40	50	50	150	150	120	185	185	190

1）表中数据为最小值。如果给定了力的作用角和旋转方向，通常情况下，可允许承受较大的附加力。请与我们取得联系。
2）根据用户要求供货。
3）当作用力不在轴端中部时，请参见第40页。
4）基础螺栓的最低性能等级为8.8级。基础必须干燥，不得有油脂。如用户要求，允许输入轴d1 上附加径向力。
1）Values in tables are minimum values. If the angle of application of force and the direction of rotation are given, signif–icantly higher additional forces can mostly beallowed. Please consult us.
2）On request.
3）For aplication of force outside the center of the shaft end, see page 40.
4）se foundation bolts of min. Property class 8.8. Foundation must be dry and grease–free, Permissible additional radial forces on input shaft d1 on request.

齿轮箱Gear Units
输出轴d_2上允许的附加径向力[1)]
Permissible Additional Radial Forces on Output Shaft d_2 [1)]
类型H1S.,H2S., H3S.,H4S., B2S., B3S., B4S
Types H1S., H2S., H3S., H4S., B2S., B3S., B4S

作用力不在轴端中部
Application of force outside the centre of the shaft end

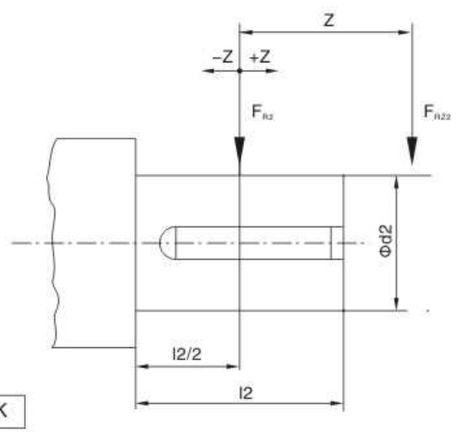

F_{RZ2} 允许的轴端外部径向力
F_{RZ2} Permissible external radial force

F_{R2} 允许的附加径向力根据81页上的表确定
F_{R2} Permissible additional radial force acc.to toble page 81

K 作用力系数根据下表确定
K Factor of application of force acc.to table

$F_{RZ2}=F_{R2} \times K$

作用力系数 K Factor of application of farce K															
规格 Size	距离 Z （mm） Distance Z in mm														
	-200	-150	-100	-75	-50	-25	0	25	50	75	100	105	200	250	300
1						1.11	1	0.81	0.68	0.58	0.51				
2						1.11	1	0.83	0.71	0.63	0.56				
3					1.21	1.09	1	0.85	0.74	0.65	0.58	0.48			
4					1.17	1.08	1	0.86	0.76	0.68	0.62	0.52	0.44		
5+6				1.22	1.14	1.06	1	0.88	0.79	0.72	0.66	0.56	0.49	0.43	
7+8				1.19	1.12	1.06	1	0.89	0.81	0.74	0.68	0.58	0.51	0.46	0.41
9+10			1.22	1.15	1.1	1.05	1	0.9	0.82	0.76	0.7	0.61	0.54	0.48	0.44
11+12			1.18	1.13	1.08	1.04	1	0.91	0.84	0.78	0.73	0.64	0.57	0.51	0.47
13+14		1.24	1.15	1.11	1.07	1.03	1	0.92	0.86	0.8	0.75	0.67	0.6	0.55	0.5
15+16		1.2	1.12	1.09	1.06	1.03	1	0.93	0.87	0.82	0.77	0.69	0.63	0.58	0.53
17+18	1.25	1.17	1.11	1.08	1.05	1.03	1	0.94	0.88	0.84	0.79	0.72	0.66	0.6	0.56

齿轮箱 Gear Units
类型H2...H4..,B2...B4.. Type H2...H4..,B2...B4..

布置形式 Design
规格1...22 Sizes 1...22

平行轴减速机	Helical Gear Units	
H.SH，H.SV	实心轴 Solid shaft	

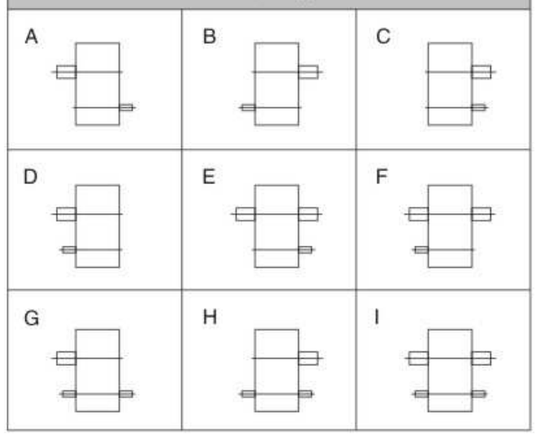

直交轴减速机	Bevel-helical Gear Units	
B.SH，B.SV	实心轴 Solid shaft	

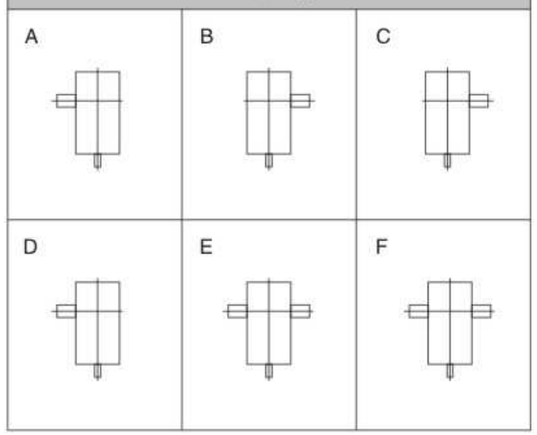

H.DH,H.DM,H.DV	带胀紧盘的空心轴 Hollow shaft for shrink disk*)	

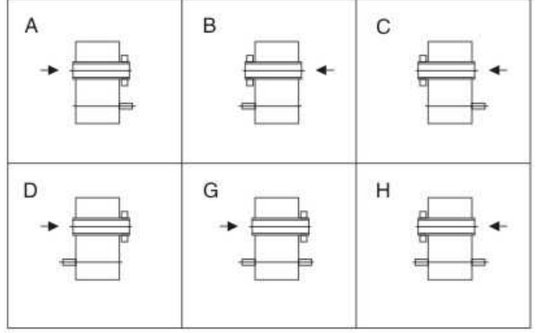

B.DH,B.DM,B.DV	带胀紧盘的空心轴 Hollow shaft for shrink disk*)

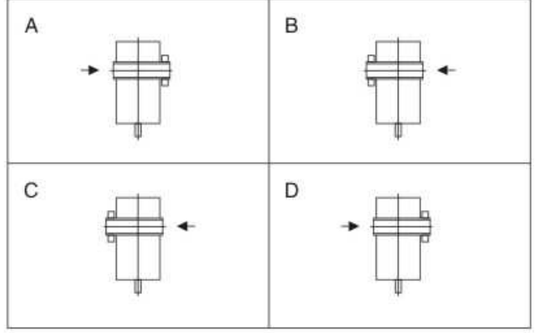

H.HH,H.HM,H.HV	空心轴 Hollow shaft*)	

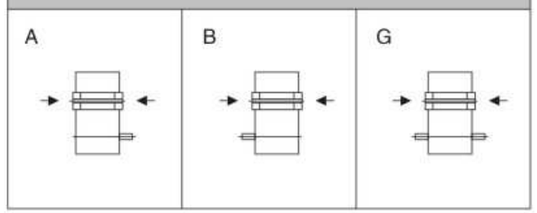

B.HH,B.HM,B.HV	空心轴 Hollow shaft*)

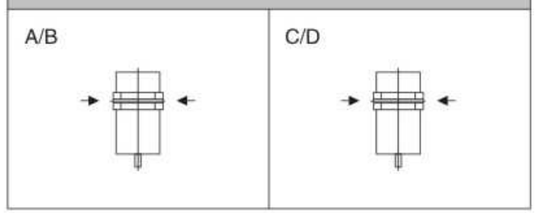

注：*）箭头表示工作机驱动轴插入方向
Note: The arrow indicates the direction of insertion of the driven machine shaft.

平行轴齿轮箱 Helical Gear Units　　单级传动 Single Stage　　卧式安装 Horizontal
类型H1SH　Types H1SH　　规格1...19　Sizes 1...19

H1SH

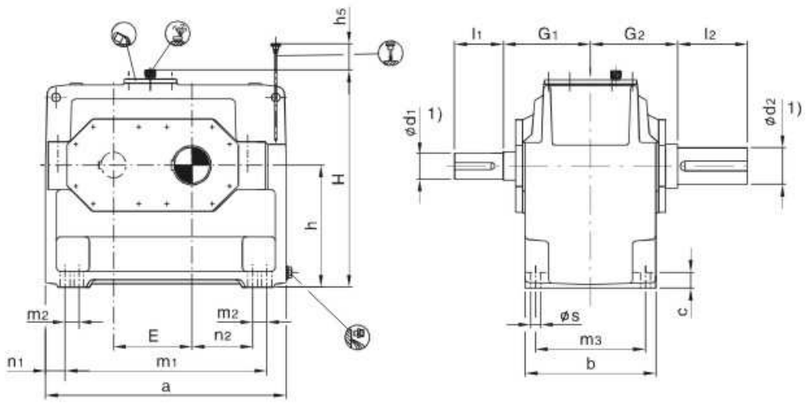

H1SH
规格 3...11带冷却风扇 Sizes 3...11 with fan

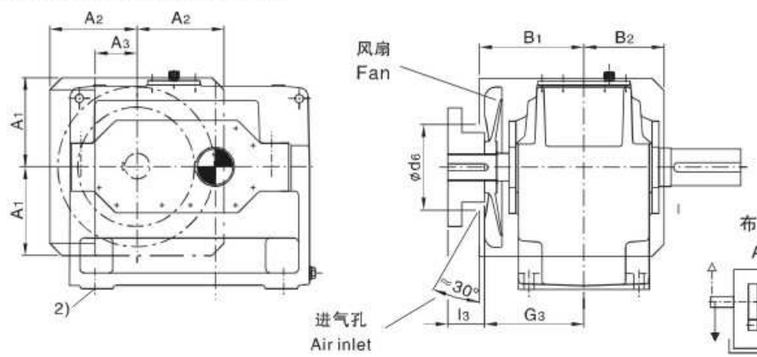

布置形式 Design

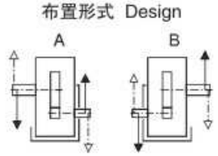

规格 Sizes 1...11　3)

H1SH
规格 13...19带冷却风扇 Sizes 13...19 with fan

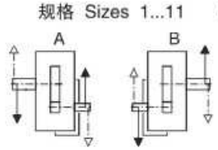

规格 Sizes 13...19

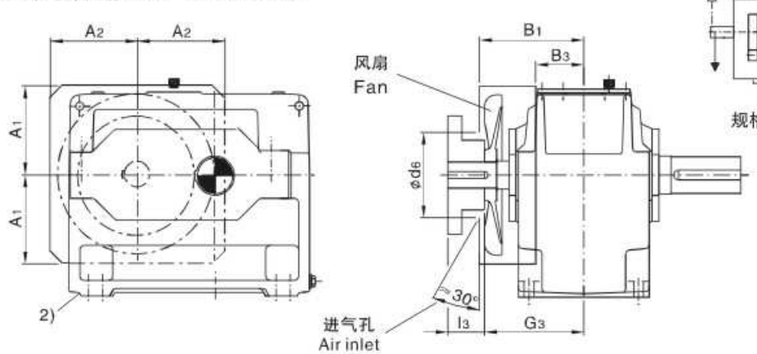

注：1) k6≤Φ50　m6>Φ50
2) 在安装基础螺栓前，应拆下风扇罩。
3) 规格1号不带风扇。

Note：1) k6≤Φ50　m6>Φ50
2) Remove air guide cover before fitting the foundation bolts.
3) Sizes 1 without fan.

平行轴齿轮箱 Helical Gear Units　　单级传动 Single Stage　　卧式安装 Horizontal
类型H1SH　Types H1SH　　规格1...19　Sizes 1...19

规格 Size	尺寸 mm Dimensions in mm																
	输入轴 Input																
	iN=1.25–2.8			iN=1.6–2.8			iN=2–2.8			iN=3.15–4			iN=4.5–5.6			G1	G3
	d1 1)	l1	l3	d1 1)	l1	l3	d1 1)	l1	l3	d1 1)	l1	l3	d1 1)	l1	l3		
1	40	70	–							30	50		24	40	–	110	
3	60	140	110							45	110	80	32	90	70	180	200
5	85	160	130							60	135	105	50	110	80	210	240
7	100	200	165							75	140	105	60	140	105	250	285
9	110	200	165							90	165	130	75	140	105	280	315
11				130	240	205				110	205	170	90	170	135	325	360
13				150	245	200				130	245	200	100	210	165	365	410
15							180	290	240	150	250	200	125	250	200	360	410
17							200	330	280	170	290	240	140	250	200	400	450
19							220	340	290	190	340	290	160	300	250	440	490

规格 Size	尺寸 mm Dimensions in mm																			
	齿轮箱 Gear units																			
	a	A1	A2	A3	b	B1	B2	B3	c	d6	E	h	h5	H	m1	m2	m3	n1	n2	s
1	295	–	–	–	150	–	–	–	18	–	90	140	55	275	220	–	120	37.5	80	12
3	420	150	145	80	200	205	130	–	28	130	130	200	82	375	310	–	160	55	110	19
5	580	225	215	115	285	255	185	–	35	190	185	290	100	525	440	–	240	70	160	24
7	690	255	250	120	375	300	230	–	45	245	225	350	75	625	540	–	315	75	195	28
9	805	300	265	140	425	330	265	–	50	280	265	420	50	735	625	–	350	90	225	35
11	960	360	330	190	515	375	320	–	60	350	320	500	40	875	770	–	440	95	280	35
13	1100	415	350		580	430		150	70	350	370	580	40	1020	870	–	490	115	315	42
15	1295	500	430	–	545	430	–	120	80	450	442	600	10	1115	1025	–	450	135	370	48
17	1410	550	430	–	615	470	–	150	80	445	490	670	–	1235	1170	130	530	120	425	42
19	1590	630	475	–	690	510	–	190	90	445	555	760	–	1395	1290	150	590	150	465	48

规格 Size	尺寸 mm Dimensions in mm			润滑油 Lubrication (L)	重量 Weight (kg)
	输出轴 Output				
	d_2 1)	G2	l_2		
1	45	110	80	2.5	55
3	60	170	125	7	128
5	85	210	160	22	302
7	105	250	200	42	547
9	125	270	210	68	862
11	150	320	240	120	1515
13	180	360	310	175	2395
15	220	360	350	190	3200
17	240	400	400	270	4250
19	270	440	450	390	5800

平行轴齿轮箱 Helical Gear Units　　两级传动 Two Stage　　卧式安装 Horizontal
类型H2.H　Types H2.H　　规格3...12　Sizes 3...12

H2SH H2HH H2DH

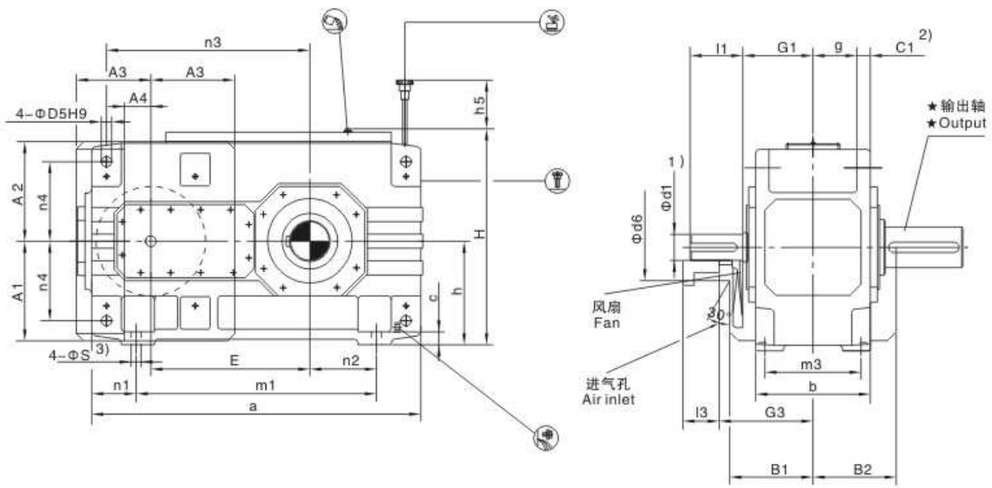

★ 输出轴 Output　　布置形式 Design

H2SH
实心轴
Solid shaft

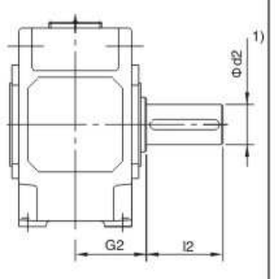

H2HH, H2HM
空心轴
Hollow shaft

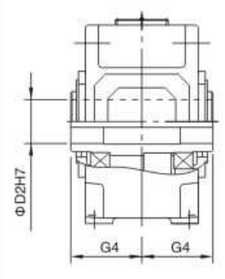

H2DH, H2DM
带胀紧盘的空心轴
Hollow shaft for shrink disk

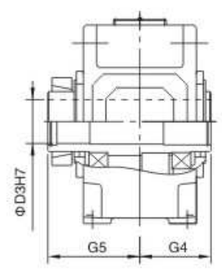

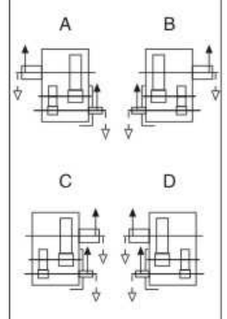

注：1）k6≤Φ50　m6＞Φ50
2）扭力支撑位于工作机侧
3）安装基础螺栓前，应先拆下风扇罩

Note：1）k6≤Φ50　m6＞Φ50
2）Torque support on driven machine side
3）Remove air vover before fitting the foundation bolts Pour la mise en place des vis

H/B工业齿轮箱 GEAR UNITS

平行轴齿轮箱 Helical Gear Units　　两级传动 Two Stage　　卧式安装 Horizontal
类型H2.H　Types H2.H　　规格3...12　Sizes 3...12

规格 Size	尺寸 mm Dimensions in mm													
	输入轴 Input													
	iN=6.3–11.2			iN=8–14			iN=12.5–22.4			iN=16–28			G1	G3
	d1 1)	l1	l3	d1 1)	l1	l3	d1 1)	l1	l3	d1 1)	l1	l3		
3	45	100	–				35	80					135	–
4	50	100	80				40	80	60				170	190
5	50	100	80				38	80	60				195	215
6				50	100	80				38	80	60	195	215
7	60	135	105				50	110	80				210	240
8				60	135	105				50	110	80	210	240
9	75	140	110				60	140	110				240	270
10				75	140	110				60	140	110	240	270
11	90	165	130				70	140	105				275	310
12				90	165	130				70	140	105	275	310

规格 Size	尺寸 mm Dimensions in mm											
	齿轮箱 Gear units											
	a	A1	A2	A3	A4	b	B1	B2	c	C1	D5	d6
3	450	–	–	–	–	190	–	–	22	24 ± 1	18	–
4	565	195	225	150	30	215	205	158	28	30 ± 1	24	136
5	640	225	260	175	55	255	230	177.5	28	30 ± 1	24	150
6	720	225	260	175	55	255	230	177.5	28	30 ± 1	24	150
7	785	272	305	210	70	300	255	210	35	36 ± 1	28	200
8	890	272	305	210	70	300	255	210	35	36 ± 1	28	200
9	925	312	355	240	100	370	285	245	40	45 ± 1.5	36	200
10	1025	312	355	240	100	370	285	245	40	45 ± 1.5	36	200
11	1105	372	420	285	135	430	325	285	50	54 ± 1.5	40	210
12	1260	372	420	285	135	430	325	285	50	54 ± 1.5	40	210

规格 Size	尺寸 mm Dimensions in mm											
	齿轮箱 Gear units											
	E	g	h	h5	H	m1	m3	n1	n2	n3	n4	s
3	220	71	175	110	360	290	160	80	65	285	132.5	15
4	270	77.5	200	110	415	355	180	105	85	345	150	19
5	315	97.5	230	150	482	430	220	105	100	405	180	19
6	350	97.5	230	150	482	510	220	105	145	440	180	19
7	385	114	280	190	572	545	260	120	130	500	215	24
8	430	114	280	190	582	650	260	120	190	545	215	24
9	450	140	320	205	662	635	320	145	155	585	245	28
10	500	140	320	215	662	735	320	145	205	635	245	28
11	545	161	380	250	782	775	370	165	180	710	300	35
12	615	161	380	250	790	930	370	165	265	780	300	35

规格 Size	尺寸 mm Dimensions in mm									润滑油 Lubrication (L)	重量 Weight (kg)
	输出轴 Output										
	H2SH			H2HH		H2DH					
	d2 1)	G2	l2	D2 2)	G4	D3	D4	G4	G5		
3	65	125	140	65	125	70	70	125	180	6	115
4	80	140	170	80	140	85	85	140	205	10	190
5	100	165	210	95	165	100	100	165	240	15	300
6	110	165	210	105	165	110	110	165	240	16	355
7	120	195	210	115	195	120	120	195	280	27	505
8	130	195	250	125	195	130	130	195	285	30	590
9	140	235	250	135	235	140	145	235	330	42	830
10	160	235	300	150	235	150	155	235	350	45	960
11	170	270	300	165	270	165	170	270	400	71	1335
12	180	270	300	180	270	180	185	270	405	76	1615

平行轴齿轮箱 Helical Gear Units　　两级传动 Two Stage　　卧式安装 Horizontal
类型H2.H,H2.M　Types H2.H,H2.M　　规格13...22　Sizes 13...22

H2SH H2HH H2DH

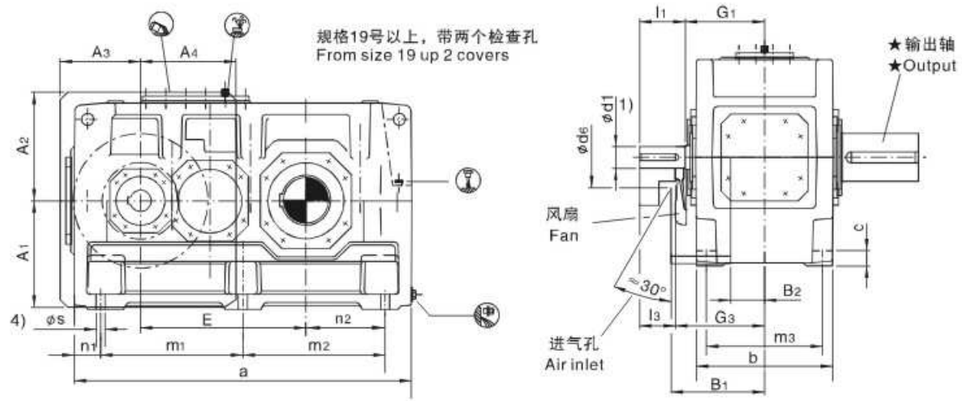

H2HM H2DM

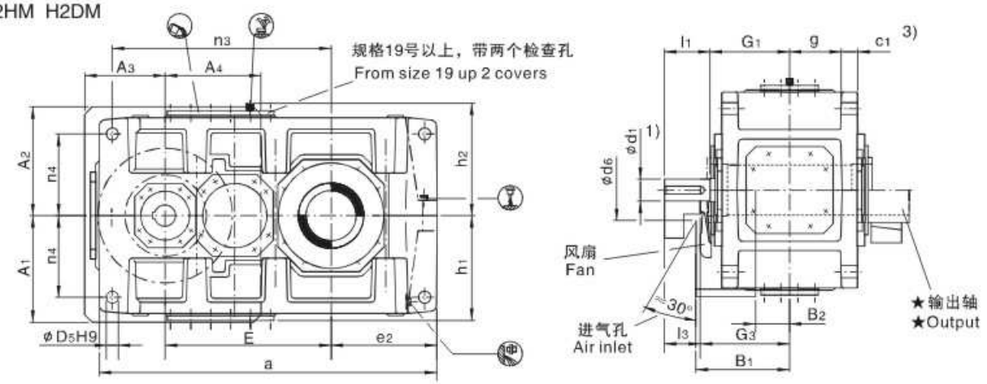

★ 输出轴 Output

H2SH
实心轴
Solid shaft

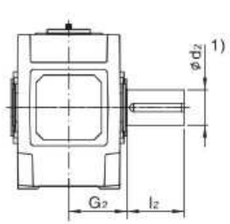

H2HH 5)，H2HM 5)
空心轴
Hollow shaft

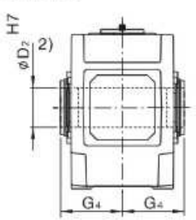

H2DH 5)，H2DM 5)
带胀紧盘的空心轴
Hollow shaft for shrink disk

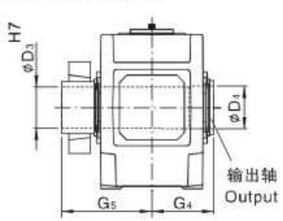

布置形式 Design

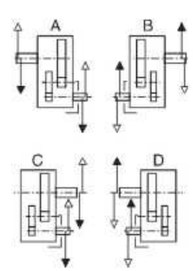

注：1) k6≤Φ50　m6＞Φ50
2) 键槽G10/T1095–1979。
3) 扭力支撑位于工作机侧。
4) 在安装螺栓前，应拆下风扇罩。
5) 规格13和15：速比只有iN=6.3–18；
规格17和19：速比只有iN=6.3–16

Note：1) k6≤Φ50　m6＞Φ50
2) Keyway GB/T1095–1979.
3) Torque support on driven machine side.
4) Remove air guide cover before fittng the foundation bolts.
5) Size 13 and 15: only iN=6.3–18;
Size 17 and 19: only iN=6.3–16.

H/B工业齿轮箱 GEAR UNITS

平行轴齿轮箱 Helical Gear Units　　两级传动 Two Stage　　卧式安装 Horizontal
类型H2.H,H2.M　Types H2.H,H2.M　　规格13...22　Sizes 13...22

规格 Size	尺寸 mm Dimensions in mm																			
	输入轴 Input																			
	iN=6.3–11.2			iN=7.1–12.5			iN=8–14			iN=12.5–20			iN=14–22.4			iN=16–25			G1	G3
	d1 1)	l1	l3	d1 1)	l1	l3	d1 1)	l1	l3	d1 1)	l1	l3	d1 1)	l1	l3	d1 1)	l1	l3		
13	100	205	170							85	170	135							330	365
14							100	205	170							85	170	135	330	365
15	120	210	165							100	210	165							365	410
16				120	210	165							100	210	165				365	410
17	125	245	200							110	210	165							420	465
18				125	245	200							110	210	165				420	465
19	150	245	200							120	210	165							475	520
20				150	245	200							120	210	165				475	520
21	170	290	240							140	250	200							495	545
22				170	290	240							140	250	200				495	545

规格 Size	尺寸 mm Dimensions in mm													
	齿轮箱 Gear units													
	a	A1	A2	A3	A4	b	B1	B2	c	c1	d6	D5	e2	E
13	1290	430	460	330	365	550	385	135	60	61±2	250	48	405	635
14	1430	430	460	330	365	550	385	135	60	61±2	250	48	475	705
15	1550	490	500	370	440	625	430	155	70	72±2	280	55	485	762
16	1640	490	500	370	440	625	430	155	70	72±2	280	55	530	808
17	1740	540	565	435	505	690	485	140	80	81±2	280	55	525	860
18	1860	540	565	435	505	690	485	140	80	81±2	280	55	585	920
19	2010	600	600	500	450	790	540	190	90	91±2	310	65	590	997
20	2130	600	600	500	450	790	540	190	90	91±2	310	65	650	1057
21	2140	680	680	500	610	830	565	200	100	100±2	450	75	655	1067
22	2250	680	680	500	610	830	565	200	100	100±2	450	75	710	1122

规格 Size	尺寸 mm Dimensions in mm												
	齿轮箱 Gear units												
	g	h	h1	h2	H	m1	m2	m3	n1	n2	n3	n4	s
13	211.5	440	450	460	900	545	545	475	100	305	835	340	35
14	211.5	440	450	460	900	545	685	475	100	375	905	340	35
15	238	500	490	500	1000	655	655	535	120	365	1005	375	42
16	238	500	490	500	1000	655	745	535	120	410	1050	375	42
17	259	550	555	560	1110	735	735	600	135	390	1145	425	42
18	259	550	555	560	1110	735	855	600	135	450	1205	425	42
19	299	620	615	620	1240	850	850	690	155	435	1345	475	48
20	299	620	615	620	1240	850	970	690	155	495	1405	475	48
21	310	700	685	690	1390	900	900	720	170	485	1400	520	56
22	310	700	685	690	1390	900	1010	720	170	540	1455	520	56

规格 Size	尺寸 mm Dimensions in mm									润滑油 Lubrication		重量 Weight	
	输出轴 Output									H2.H	H2.M		
	H2SH			H2HH 5) H2HM 5)		H2DH 5) H2DM 5)				(L)		H2.H	H2.M
	d2 1)	G2	L2	D2 2)	G4	D3	D4	G4	G5			(kg)	(kg)
13	200	335	350	190	335	190	195	335	480	135	110	2000	1880
14	210	335	350	210	335	210	215	335	480	140	115	2570	2430
15	230	380	410	230	380	230	235	380	550	210	160	3430	3240
16	240	380	410	240	380	240	245	380	550	215	165	3655	3465
17	250	415	410	250	415	250	260	415	600	290	230	4650	4420
18	270	415	470	275	415	280	285	415	600	300	240	5125	4870
19	290	465	470	–	–	285	295	465	670	320	300	6600	6300
20	300	465	500	–	–	310	315	465	670	340	320	7500	7200
21	320	490	500	–	–	330	335	490	715	320	350	8900	8400
22	340	490	550	–	–	340	345	490	725	340	370	9600	9200

平行轴齿轮箱 Helical Gear Units　　三级传动 Three Stage　　卧式安装 Horizontal
类型H3.H　Types H3.H　　规格5...12　Sizes 5...12

H3SH H3HH H3DH

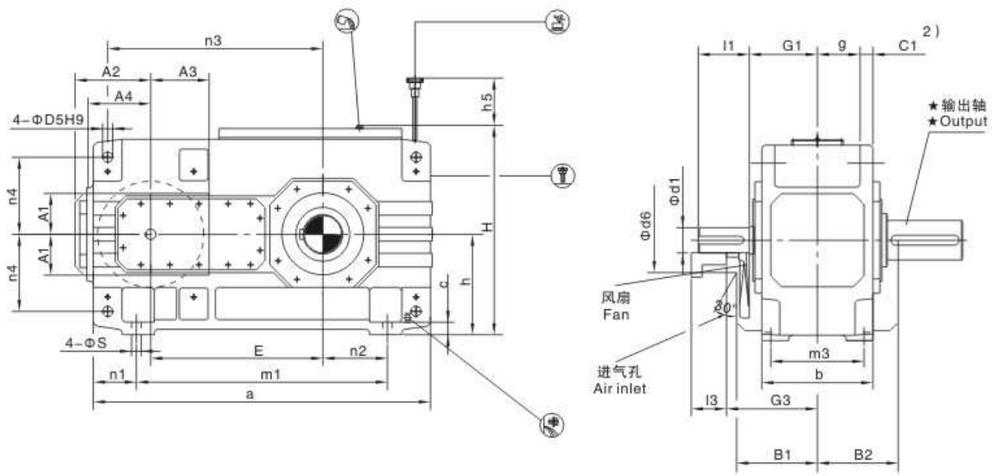

★ 输出轴 Output　　布置形式 Design

H3SH
实心轴
Solid shaft

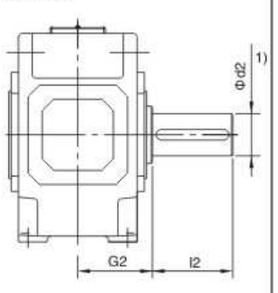

H3HH, H3HM
空心轴
Hollow shaft

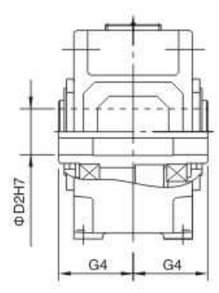

H3DH, H3DM
带胀紧盘的空心轴
Hollow shaft for shrink disk

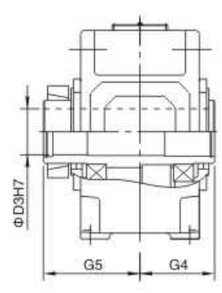

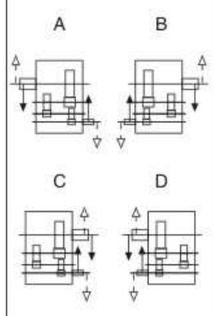

注：1）k6≤Φ50　n6＞Φ50
　　2）扭力支撑位于工作机侧

Note：1）k6≤Φ50　n6＞Φ50
　　2）Torque support on driven machine side

平行轴齿轮箱 Helical Gear Units　　三级传动 Three Stage　　卧式安装 Horizontal
类型H3.H　Types H3.H　　规格5...12　Sizes 5...12

规格 Size	尺寸 mm Dimensions in mm																			
	输入轴 Input																			
	iN=24-45			iN=31.5-56			iN=50-63			iN=63-80			iN=71-90			iN=90-112			G1	G3
	d1[1]	l1	l3	d1[1]	l1	l3	d1[1]	l1	l3	d1[1]	l1	l3	d1[1]	l1	l3	d1[1]	l1	l3		
5	40	80	60				30	60	40				24	60	40				170	190
6				40	80	60				30	60	40				24	60	40	170	190
7	45	110	80				35	80	60				28	70	50				210	240
8				45	110	80				35	80	60				28	70	50	210	240
9	60	140	110				45	110	80				32	90	60				240	270
10				60	140	110				45	110	80				32	90	60	240	270
11	70	140	105				50	110	80				42	100	70				275	310
12				70	140	105				50	110	80				42	100	70	275	310

规格 Size	尺寸 mm Dimensions in mm											
	齿轮箱 Gear units											
	a	A1	A2	A3	A4	b	B1	B2	c	c1	d6	D5
5	690	137	135	140	80	255	215	175	28	30±1	60	24
6	770	137	135	140	80	255	215	175	28	30±1	60	24
7	845	157	160	180	100	300	245	205	35	36±1	75	28
8	950	157	160	180	100	300	245	205	35	36±1	75	28
9	1000	182	190	205	120	370	295	240	40	45±1.5	90	36
10	1100	182	190	205	120	370	295	240	40	45±1.5	90	36
11	1200	218	220	255	150	430	325	280	50	54±1.5	100	40
12	1355	218	220	255	150	430	325	280	50	54±1.5	100	40

规格 Size	尺寸 mm Dimensions in mm											
	齿轮箱 Gear units											
	E	g	h	h5	H	m1	m3	n1	n2	n3	n4	s
5	405	97.5	230	130	482	480	220	105	100	455	180	19
6	440	97.5	230	130	482	560	220	105	145	490	180	19
7	495	114	280	170	572	605	260	120	130	560	215	24
8	540	114	280	160	582	710	260	120	190	605	215	24
9	580	140	320	185	662	710	320	145	155	660	245	28
10	630	140	320	185	662	810	320	145	205	710	245	28
11	705	161	380	180	782	870	370	165	180	805	300	35
12	775	161	380	170	790	1025	370	165	265	875	300	35

规格 Size	尺寸 mm Dimensions in mm									润滑油 Lubrication (L)	重量 Weight (kg)
	输出轴 Output										
	H3SH			H3HH		H3DH					
	d2[2]	G2	l2	D2[2]	G4	D3	D4	G4	G5		
5	100	165	210	95	165	100	100	165	240	15	320
6	110	165	210	105	165	110	110	165	240	17	365
7	120	195	210	115	195	120	120	195	280	28	540
8	130	195	250	125	195	130	130	195	285	30	625
9	140	235	250	135	235	140	145	235	330	45	875
10	160	235	300	150	235	150	155	235	350	46	1020
11	170	270	300	165	270	165	170	270	400	85	1400
12	180	270	300	180	270	180	185	270	405	90	1675

平行轴齿轮箱 Helical Gear Units　　三级传动 Three Stage　　卧式安装 Horizontal
类型H3.H,H3.M　Types H3.H,H3.M　　规格13...22　Sizes 13...22

H3SH H3HH H3DH

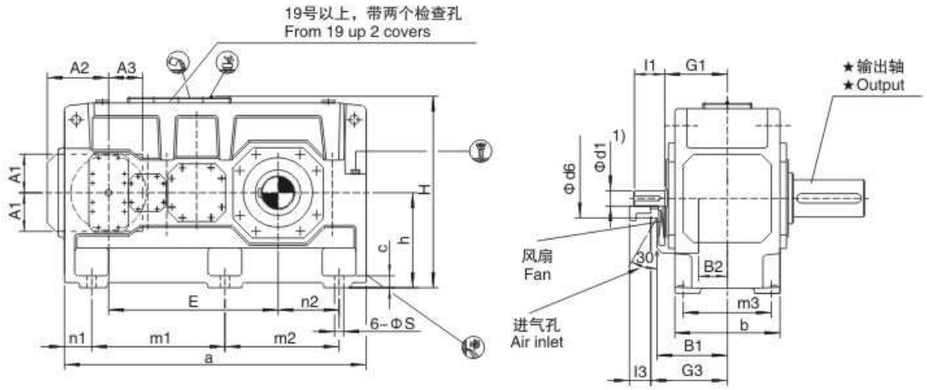

H3HM H3DM

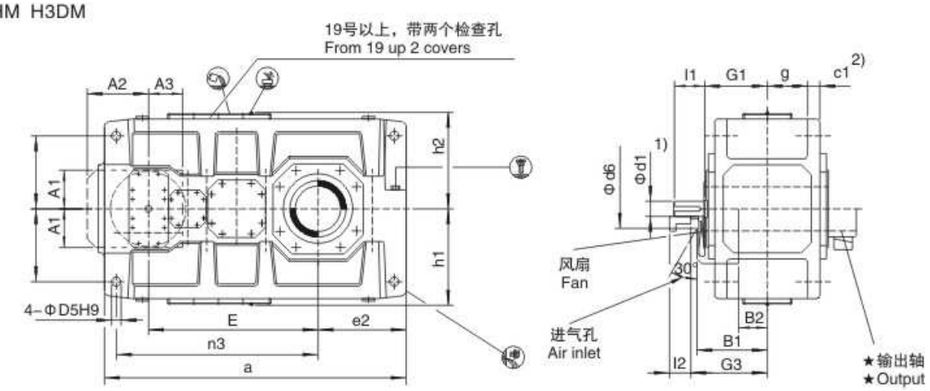

★ 输出轴 Output

H3SH
实心轴
Solid shaft

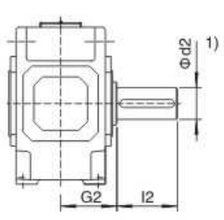

H3HH, H3HM
空心轴
Hollow shaft

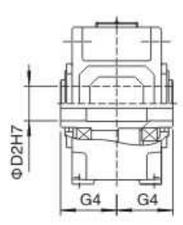

H3DH, H3DM
带胀紧盘的空心轴
Hollow shaft for shrink disk

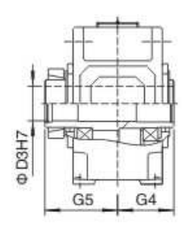

布置形式 Design

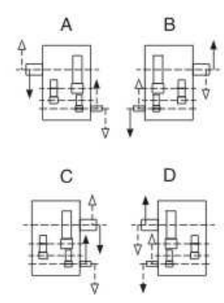

注：1) m6≤Φ50　n6>Φ50
2) 扭力支撑位于工作机侧。

Note：1) m6≤Φ50　n6>Φ50
2) Torque support on driven machine side.

平行轴齿轮箱 Helical Gear Units　　三级传动 Three Stage　　卧式安装 Horizontal
类型H3.H,H3.M　Types H3.H,H3.M　　规格13...22　Sizes 13...22

规格 Size	尺寸 mm Dimensions in mm																			
	输入轴 Input																			
	iN=22.4–45			iN=25–50 iN=28–56 *)			iN=50–63			N=56–71 iN=63–80 *)			iN=71–90			N=80–100 iN=90–112 *)			G1	G3
	d1 1)	l1	l3	d1 1)	l1	l3	d1 1)	l1	l3	d1 1)	l1	l3	d1 1)	l1	l3	d1 1)	l1	l3		
13	85	160	130				60	135	105				50	110	80				310	385
14				85	160	130				60	135	105				50	110	80	310	385
15	100	200	165				75	140	105				60	140	105				350	420
16				100	200	165				75	140	105				60	140	105	350	420
17	100	200	165				75	140	105				60	140	105				380	450
18				100	200	165				75	140	105				60	140	105	380	450
19	110	200	4)				90	165	4)				75	140	4)				430	4)
20				110	200	4)				90	165	4)				75	140	4)	430	4)
21	130	240	4)				110	205	4)				90	170	4)				470	4)
22				130	240	4)				110	205	4)				90	170	4)	470	4)

*) 仅指规格14号齿轮箱 Only size 14

规格 Size	尺寸 mm Dimensions in mm												
	齿轮箱 Gear units												
	a	A1	A2	A3	b	B1	B2	c	c1	d6	D5	e2	E
13	1395	225	225	212	550	380	195	60	61 ± 2	120	48	405	820
14	1535	225	225	212	550	380	195	60	61 ± 2	120	48	475	890
15	1680	270	265	252	625	415	205	70	72 ± 2	150	55	485	987
16	1770	270	265	252	625	415	205	70	72 ± 2	150	55	530	1033
17	1770	270	265	252	690	445	235	80	81 ± 2	150	55	525	1035
18	1890	270	265	252	690	445	235	80	81 ± 2	150	55	585	1095
19	2030	4)	4)	4)	790	4)	4)	90	91 ± 2	4)	65	590	1190
20	2150				790			90	91 ± 2		65	650	1250
21	2340				830			100	100 ± 2		75	655	1387
22	2450				830			100	100 ± 2		75	710	1442

规格 Size	尺寸 mm Dimensions in mm												
	齿轮箱 Gear units												
	g	h	h1	h2	H	m1	m2	m3	n1	n2	n3	n4	s
13	211.5	440	450	460	900	597.5	597.5	475	100	305	940	340	35
14	211.5	440	450	460	900	597.5	737.5	475	100	375	1010	340	35
15	238	500	490	500	1000	720	720	535	120	365	1135	375	42
16	238	500	490	500	1000	720	810	535	120	410	1180	375	42
17	259	550	555	560	1110	750	750	600	135	390	1175	425	42
18	259	550	555	560	1110	750	870	600	135	450	1235	425	42
19	299	620	615	620	1240	860	860	690	155	435	1365	475	48
20	299	620	615	620	1240	860	980	690	155	495	1425	475	48
21	310	700	685	690	1390	1000	1000	720	170	485	1615	520	56
22	310	700	685	690	1390	1000	1110	720	170	540	1670	520	56

规格 Size	尺寸 mm Dimensions in mm									润滑油 Lubrication		重量 Weight	
	输出轴 Output												
	H3SH			H3HH H3HM		H3DH H3DM				H3.H	H3.M	H3.H	H3.M
	d2 1)	G2	l2	D2 2)	G4	D3	D4	G4	G5	(L)	(L)	(kg)	(kg)
13	200	335	350	190	335	190	195	335	480	160	125	2295	2155
14	210	335	350	210	335	210	215	335	480	165	130	2625	2490
15	230	380	410	230	380	230	235	380	550	235	190	3475	3260
16	240	380	410	240	380	240	245	380	550	245	195	3875	3625
17	250	415	410	250	415	250	260	415	600	305	240	4560	4250
18	270	415	470	275	415	280	285	415	600	315	250	5030	4740
19	290	465	470	–	–	285	295	465	670	420	390	6700	6200
20	300	465	500	–	–	310	315	465	670	450	415	8100	7600
21	320	490	500	–	–	330	335	490	715	470	515	9100	8500
22	340	490	550	–	–	340	345	490	725	490	540	9800	9300

平行轴齿轮箱 Helical Gear Units　　四级传动 Four Stage　　卧式安装 Horizontal
类型H4.H　Types H4.H　　规格7...12　Sizes 7...12

H4SH H4HH H4DH

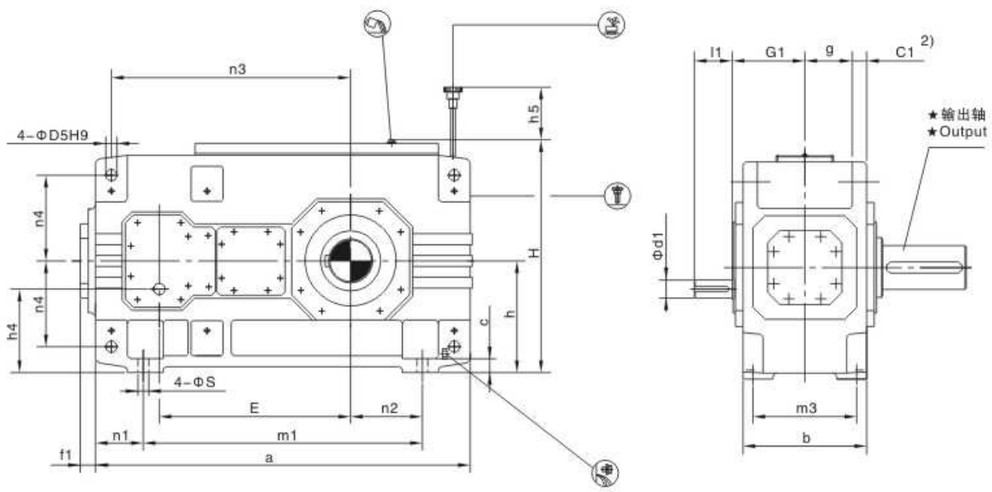

★ 输出轴 Output　　布置形式 Design

H4SH
实心轴 Solid shaft

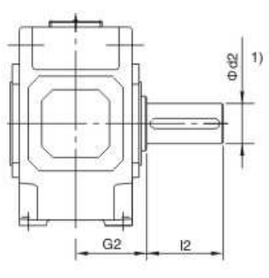

H4HH, H4HM
空心轴 Hollow shaft

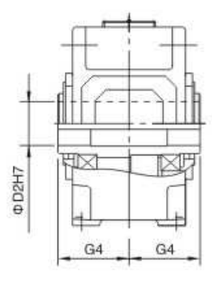

H4DH, H4DM
带胀紧盘的空心轴
Hollow shaft for shrink disk

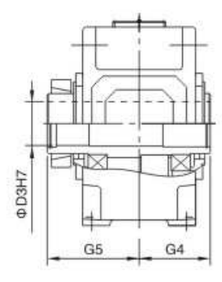

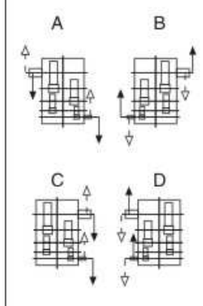

注：1）k6≤Φ50　m6＞Φ50
　　2）扭力支撑位于工作机侧

Note：1）k6≤Φ50　m6＞Φ50
　　2）Torque support on driven machine side

平行轴齿轮箱 Helical Gear Units　　四级传动 Four Stage　　卧式安装 Horizontal
类型H4.H　Types H4.H　　规格7...12　Sizes 7...12

规格 Size	尺寸 mm Dimensions in mm								
	输入轴 Input								
	iN=100–180		iN=125–224		iN=200–355		iN=250–450		G1
	d1 1)	l1	d1 1)	l1	d1 1)	l1	d1 1)	l1	
7	30	60			24	50			180
8			30	60			24	50	180
9	35	80			28	60			215
10			35	80			28	60	215
11	45	110			32	80			250
12			45	110			32	80	250

规格 Size	尺寸 mm Dimensions in mm																		
	齿轮箱 Gear units																		
	a	b	c	c1	D5	E	f1	g	h	h4	h5	H	m1	m3	n1	n2	n3	n4	s
7	845	300	35	36±1	28	495	37	114	280	200	140	572	605	260	120	130	560	215	24
8	950	300	35	36±1	28	540	37	114	280	200	140	582	710	260	120	190	605	215	24
9	1000	370	40	45±1.5	36	580	43	140	320	230	150	662	710	320	145	155	660	245	28
10	1100	370	40	45±1.5	36	630	43	140	320	230	150	662	810	320	145	205	710	245	28
11	1200	430	50	54±1.5	40	705	47	161	380	270	165	782	870	370	165	180	805	300	35
12	1355	430	50	54±1.5	40	775	47	161	380	270	165	790	1025	370	165	265	875	300	35

规格 Size	尺寸 mm Dimensions in mm									润滑油 Lubrication (L)	重量 Weight (kg)
	输出轴 Output										
	H4SH			H4HH		H4DH					
	d2 1)	G2	l2	D2 2)	G4	D3	D4	G4	G5		
7	120	195	210	115	195	120	120	195	280	25	550
8	130	195	250	125	195	130	130	195	285	27	645
9	140	235	250	135	235	140	145	235	330	48	875
10	160	235	300	150	235	150	155	235	350	50	1010
11	170	270	300	165	270	165	170	270	400	80	1460
12	180	270	300	180	270	180	185	270	405	87	1725

平行轴齿轮箱 Helical Gear Units　　四级传动 Four Stage　　卧式安装 Horizontal
类型H4.H,H4.M　Types H4.H,H4.M　　规格13...22　Sizes 13...22

H4SH H4HH H4DH

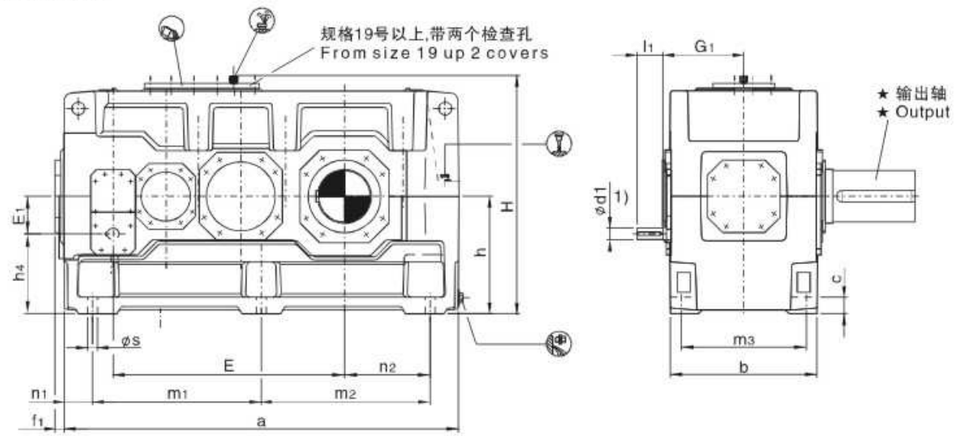

H4HM H4DM

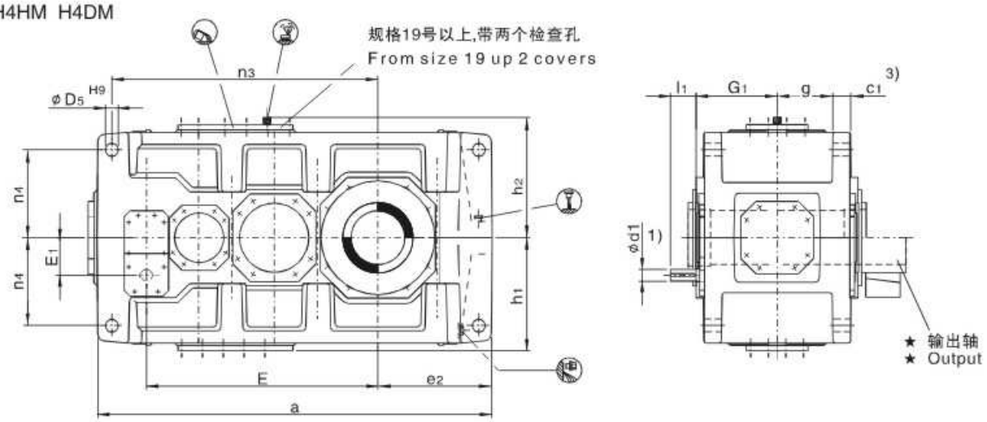

★ 输出轴 Output

H4SH
实心轴
Solid shaft

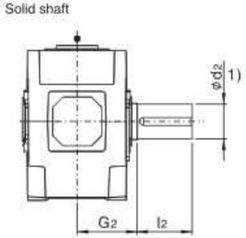

H4HH, H4HM
空心轴
Hollow shaft

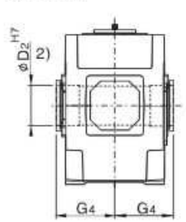

H4DH, H4DM
带胀紧盘的空心轴
Hollow shaft for shrink disk

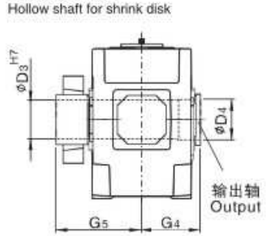

布置形式 Design

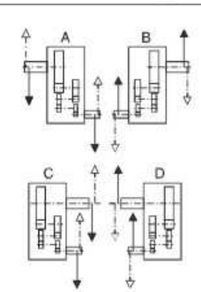

注：1) k6≤Φ50　m6>Φ50
2) 键槽GB/T1095-1979。
3) 扭力支撑位于工作机侧。

Note：1) k6≤Φ50　m6>Φ50
2) Keyway GB/T1095-1979.
3) Torque support on driven machine side.

平行轴齿轮箱 Helical Gear Units　　四级传动 Four Stage　　卧式安装 Horizontal
类型H4.H,H4.M　Types H4.H,H4.M　　规格13...22　Sizes 13...22

规格 Size	尺寸 mm Dimensions in mm												
	输入轴 Input												
	iN=100–180		iN=112–200		iN=125–224		iN=200–355		iN=224–400		iN=250–450		G1
	d1[1]	l1	d1[1]	l1	d1[1]	l1	d1[1]	l1	d1[1]	l1	d1[1]	l1	
13	50	110					38	80					305
14					50	110					38	80	305
15	60	140					50	110					345
16			60	140					50	110			345
17	60	140					50	110					380
18			60	140					50	110			380
19	75	140					60	140					440
20			75	140					60	140			440
21	90	165					70	140					460
22			90	165					70	140			460

规格 Size	尺寸 mm Dimensions in mm										
	齿轮箱 Gear units										
	a	b	c	c1	D5	e2	E	E1	f1	g	h
13	1395	550	60	61±2	48	405	820	130	47	211.5	440
14	1535	550	60	61±2	48	475	890	130	47	211.5	440
15	1680	625	70	72±2	55	485	987	160	56	238	500
16	1770	625	70	72±2	55	530	1033	160	56	238	500
17	1770	690	80	81±2	55	525	1035	160	53	259	550
18	1890	690	80	81±2	55	585	1095	160	53	259	550
19	2030	790	90	91±2	65	590	1190	185	53	299	620
20	2150	790	90	91±2	65	650	1250	185	53	299	620
21	2340	830	100	100±2	75	655	1387	225	62	310	700
22	2450	830	100	100±2	75	710	1442	225	62	310	700

规格 Size	尺寸 mm Dimensions in mm											
	齿轮箱 Gear units											
	h1	h2	h4	H	m1	m2	m3	n1	n2	n3	n4	s
13	450	460	310	900	597.5	597.5	475	100	305	940	340	35
14	450	460	310	900	597.5	737.5	475	100	375	1010	340	35
15	490	500	340	1000	720	720	535	120	365	1135	375	42
16	490	500	340	1000	720	810	535	120	410	1180	375	42
17	555	560	390	1110	750	750	600	135	390	1175	425	42
18	555	560	390	1110	750	870	600	135	450	1235	425	42
19	615	620	435	1240	860	860	690	155	435	1365	475	48
20	615	620	435	1240	860	980	690	155	495	1425	475	48
21	685	690	475	1390	1000	1000	720	170	485	1615	520	56
22	685	690	475	1390	1000	1110	720	170	540	1670	520	56

规格 Size	尺寸 mm Dimensions in mm									润滑油 Lubrication		重量 Weight	
	输出轴 Output												
	H4SH			H4HH	H4HM	H3DH H3DM				H4.H	H4.M	H4.H	H4.M
	d2[1]	G2	l2	D2[2]	G4	D3	D4	G4	G5	(L)	(L)	(kg)	(kg)
13	200	335	350	190	335	190	195	335	480	130	120	2390	2270
14	210	335	350	210	335	210	215	335	480	140	125	2730	2600
15	230	380	410	230	380	230	235	380	550	230	170	3635	3440
16	240	380	410	240	380	240	245	380	550	235	175	3965	3740
17	250	415	410	250	415	250	260	415	600	290	225	4680	4445
18	270	415	470	275	415	280	285	415	600	305	230	5685	4915
19	290	465	470	–	–	285	295	465	670	360	310	6800	6300
20	300	465	500	–	–	310	315	465	670	380	330	8200	7700
21	320	490	500	–	–	330	335	490	715	395	430	9200	8600
22	340	490	550	–	–	340	345	490	725	420	450	9900	9400

直交轴齿轮箱 Bevel-helical Gear Units　二级传动 Two Stage　卧式安装 Horizontal
类型B2.H　Types B2.H　规格1...12　Sizes 1...12

B2SH B2HH B2DH

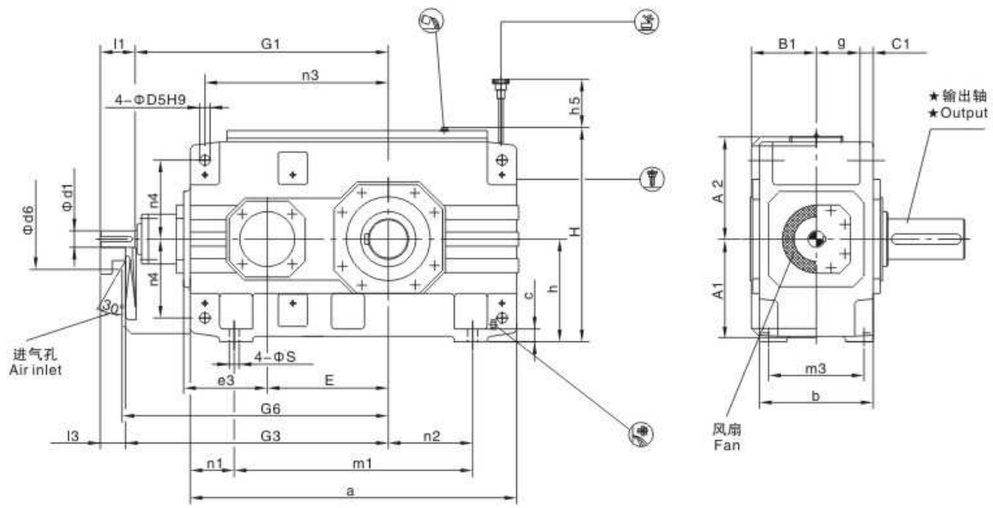

★ 输出轴 Output

B2SH
实心轴
Solid shaft

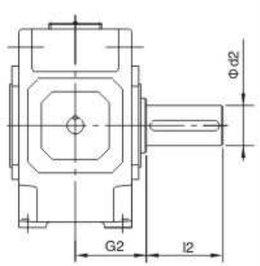

B2HH, B2HM
空心轴
Hollow shaft

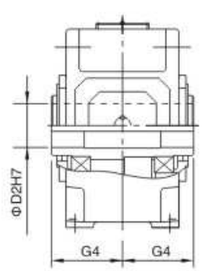

B2DH, B2DM
带胀紧盘的空心轴
Hollow shaft for shrink disk

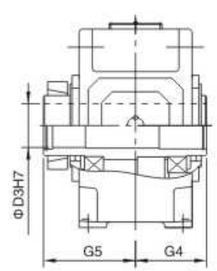

布置形式 Design

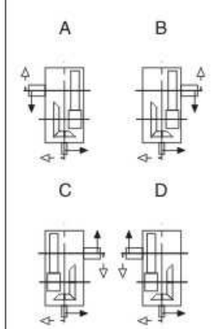

注：1）k6≤Φ50　m6＞Φ50
　　2）扭力支撑位于工作机侧

Note：1）k6≤Φ50　m6＞Φ50
　　2）Torque support on driven machine side

H/B工业齿轮箱 GEAR UNITS

直交轴齿轮箱 Bevel-helical Gear Units　二级传动 Two Stage　卧式安装 Horizontal
类型B2.H　Types B2.H　规格1...12　Sizes 1...12

规格 Size	尺寸 mm Dimensions in mm										
	输入轴 Input										
	iN=5-11.2			iN=6.3-14			iN=12.5-18			G1	G3
	d1[1]	l1	l3	d1[1]	l1	l3	d1[1]	l1	l3		
1	28	55	40				20	50	35	300	315
2	30	70	50				25	60	40	340	360
3	45	100	60				35	80	40	390	410
4	50	100	80							465	485
5	60	110	80							535	565
6				60	110	80				570	600
7	75	135	105							640	670
8				75	135	105				685	715
9	85	165	130							755	790
10				85	165	130				805	840
11	95	165	130							925	960
12				95	165	130				995	1030

规格 Size	尺寸 mm Dimensions in mm											
	齿轮箱 Gear units											
	a	A1	A2	b	B1	c	c1	D5	d6	e3	E	g
1	305	125	130	180	128	18	16±1	12	110	90	90	74
2	355	140	145	205	143	18	20±1	14	110	110	110	82.5
3	405	170	170	225	163	22	24±1	18	120	130	130	88.5
4	505	195	200	270	188	28	30±1	24	150	160	160	105
5	565	220	235	320	215	28	30±1	24	160	185	185	130
6	645	220	235	320	215	28	30±1	24	160	185	220	130
7	690	270	285	380	250	35	36±1	28	210	225	225	154
8	795	270	285	380	250	35	36±1	28	210	225	270	154
9	820	310	325	440	270	40	48±1.5	36	195	265	265	172
10	920	310	325	440	270	40	48±1.5	36	195	265	315	172
11	975	370	385	530	328	50	54±1.5	40	210	320	320	211
12	1130	370	385	530	328	50	54±1.5	40	210	320	390	211

规格 Size	尺寸 mm Dimensions in mm										
	齿轮箱 Gear units										
	G6	h	h5	H	m1	m3	n1	n2	n3	n4	s
1	325	130	80	275	185	155	60	70	160	105	12
2	370	145	80	305	225	180	65	75	195	115	12
3	420	175	90	360	245	195	80	85	235	132.5	15
4	495	200	80	415	295	235	105	85	285	150	19
5	575	230	150	482	355	285	105	100	330	180	19
6	610	230	150	482	435	285	105	145	365	180	19
7	685	280	180	582	450	340	120	130	405	215	24
8	730	280	190	582	555	340	120	190	450	215	24
9	805	320	205	662	530	390	145	155	480	245	28
10	855	320	215	662	630	390	145	205	530	245	28
11	980	380	240	790	645	470	165	180	580	300	35
12	1050	380	250	790	800	470	165	265	650	300	35

规格 Size	尺寸 mm Dimensions in mm									润滑油 Lubrication (L)	重量 Weight (kg)
	输出轴 Output										
	B2SH			B2HH		B2DH					
	d2[1]	G2	l2	D2[2]	G4	D3	D4	G4	G5		
1	45	120	80	–	–	–	–	–	–	2	65
2	55	135	110	55	135	60	60	135	180	4	90
3	65	145	140	65	145	70	70	145	200	6	140
4	80	170	170	80	170	85	85	170	235	10	235
5	100	200	210	95	200	100	100	200	275	16	360
6	110	200	210	105	200	110	110	200	275	19	410
7	120	235	210	115	235	120	120	235	320	31	615
8	130	235	250	125	235	130	130	235	325	34	700
9	140	270	250	135	270	140	145	270	365	48	1000
10	160	270	300	150	270	150	155	270	385	50	1155
11	170	320	300	165	320	165	170	320	450	80	1640
12	180	320	300	180	320	180	185	320	455	95	1910

直交轴齿轮箱 Bevel–helical Gear Units　二级传动 Two Stage　卧式安装 Horizontal
类型B2.H,B2.M　Types B2.H,B2.M　规格13...18　Sizes 13...18

B2SH B2HH B2DH

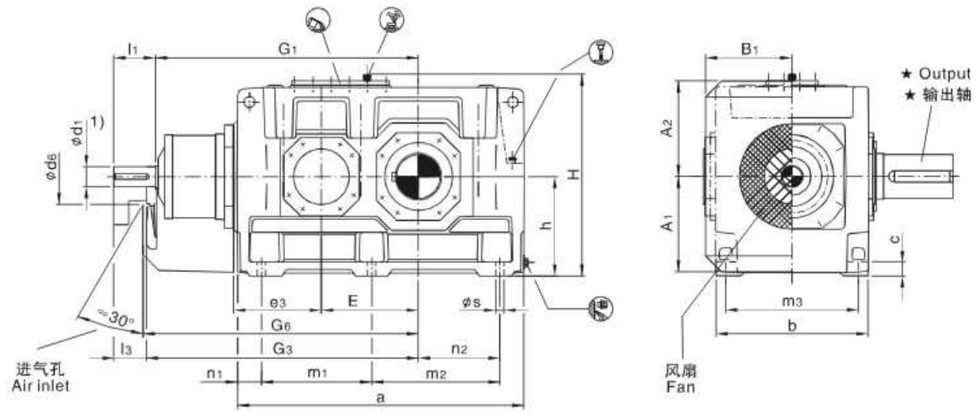

B2HM B2DM

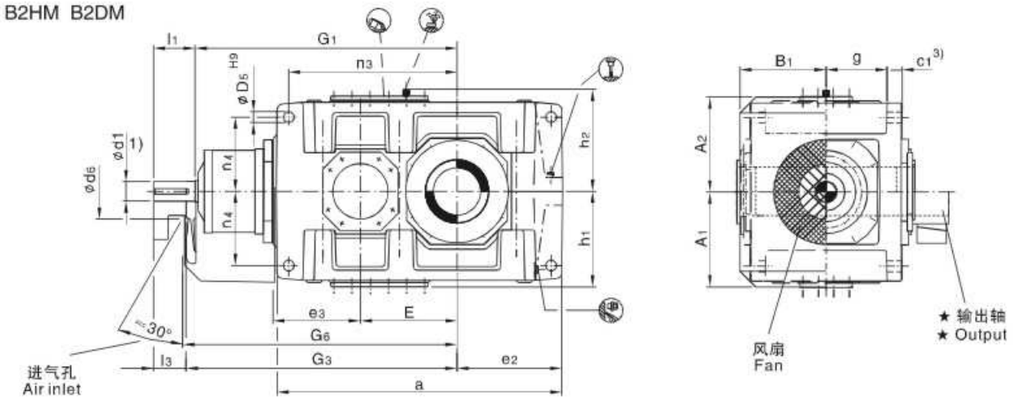

★ 输出轴 Output

B2SH
实心轴
Solid shaft

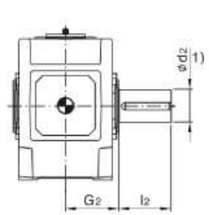

B2HH, B2HM
空心轴
Hollow shaft

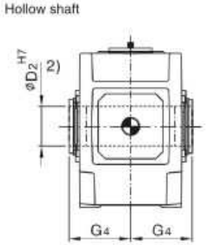

B2DH, B2DM
带胀紧盘的空心轴
Hollow shaft for shrink disk

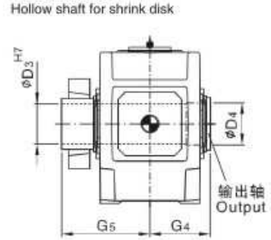

布置形式 Design

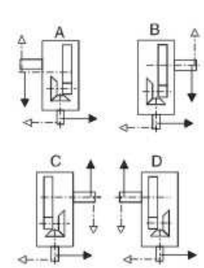

注：1) k6≤Φ50 m6>Φ50
2) 键槽GB/T1095–1979。
3) 扭力支撑位于工作机侧。

Note：1) k6≤Φ50 m6>Φ50
2) Keyway GB/T1095–1979.
3) Torque support on driven machine side.

H/B工业齿轮箱 GEAR UNITS

直交轴齿轮箱 Bevel–helical Gear Units　二级传动 Two Stage　卧式安装 Horizontal
类型B2.H,B2.M　Types B2.H,B2.M　规格13...18　Sizes 13...18

规格 Size	尺寸 mm Dimensions in mm																
	输入轴 Input																
	iN=5–11.2			iN=5.6–11.2			iN=5.6–12.5			iN=6.3–14			iN=7.1–12.5			G1	G3
	d1 1)	l1	l3	d1 1)	l1	l3	d1 1)	l1	l3	d1 1)	l1	l3	d1 1)	l1	l3		
13	115	205	165													1070	1110
14										115	205	165				1140	1180
15	140	245	200													1277	1322
16							140	245	200							1323	1368
17				150	245	200										1435	1480
18													150	245	200	1495	1540

规格 Size	尺寸 mm Dimensions in mm												
	齿轮箱 Gear units												
	a	A1	A2	b	B1	c	c1	d6	D5	e2	e3	E	g
13	1130	430	450	655	375	60	61±2	245	48	405	380	370	264
14	1270	430	450	655	375	60	61±2	245	48	475	380	440	264
15	1350	490	495	765	435	70	72±2	280	55	485	450	442	308
16	1440	490	495	765	435	70	72±2	280	55	530	450	488	308
17	1490	540	555	885	505	80	81±2	380	65	525	510	490	356
18	1610	540	555	885	505	80	81±2	380	65	585	510	550	356

规格 Size	尺寸 mm Dimensions in mm												
	齿轮箱 Gear units												
	G6	h	h1	h2	H	m1	m2	m3	n1	n2	n3	n4	s
13	1130	440	450	460	900	465	465	580	100	305	675	340	35
14	1200	440	450	460	900	465	605	580	100	375	745	340	35
15	1340	500	490	500	1000	555	555	670	120	365	805	375	42
16	1385	500	490	500	1000	555	645	670	120	410	850	375	42
17	1500	550	555	560	1110	610	610	780	135	390	895	420	48
18	1560	550	555	560	1110	610	730	780	135	450	955	420	48

规格 Size	尺寸 mm Dimensions in mm									润滑油 Lubrication		重量 Weight (kg)	
	输出轴 Output									B2.H	B2.M		
	B2SH			B2HH B2HM		B2DH B2DM				轴封 (L) Shaft seal			
	d2 1)	G2	l2	D2 1)	G4	D3	D4	G4	G5				
13	200	390	350	–	–	–	–	–	–	140	120	2450	2350
14	210	390	350	210	390	210	215	390	535	155	130	2825	2725
15	230	460	410	–	–	–	–	–	–	220	180	3990	3795
16	240	460	410	240	450	240	245	450	620	230	190	4345	4160
17	250	540	410	–	–	–	–	–	–	320	260	5620	5320
18	270	540	470	275	510	280	285	510	700	335	275	6150	5860

直交轴齿轮箱 Bevel-helical Gear Units　三级传动 Three Stage　卧式安装 Horizontal
类型B3.H　Types B3.H　规格3...12　Sizes 3...12

B3SH B3HH B3DH

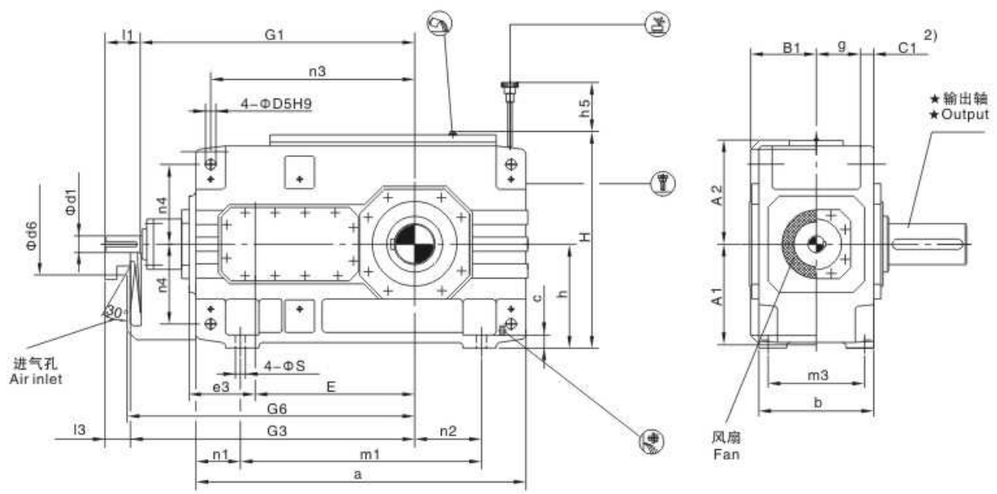

★ 输出轴 Output　　布置形式 Design

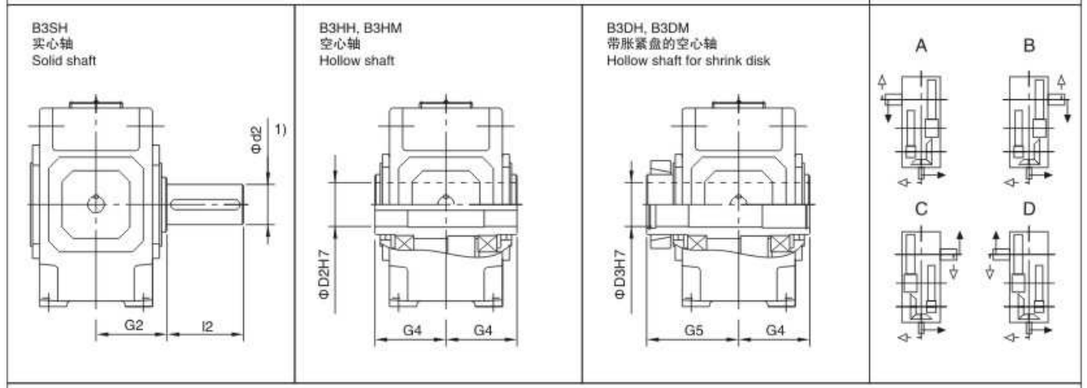

注：1) k6≤Φ50 m6>Φ50
2) 扭力支撑位于工作机侧。

Note：1) k6≤Φ50 m6>Φ50
2)Torque support on driven machine side.

直交轴齿轮箱 Bevel-helical Gear Units　三级传动 Three Stage　卧式安装 Horizontal
类型B3.H　Types B3.H　规格3...12　Sizes 3...12

规格 Size	尺寸 mm Dimensions in mm																
	输入轴 Input																
	iN=12.5-45			iN=16-56			iN=20-45			iN=50-71			iN=63-90			G1	G3
	d1[1]	l1	l3	d1[1]	l1	l3	d1[1]	l1	l3	d1[1]	l1	l3	d1[1]	l1	l3		
3							35	80	60	25	50	30				430	450
4	35	80	60							30	60	40				500	530
5	45	110	80							35	80	50				575	605
6				45	110	80							35	80	50	610	640
7	50	110	90							40	80	60				690	710
8				50	110	90							40	80	60	735	755
9	60	140	110							50	110	80				800	830
10				60	140	110							50	110	80	850	880
11	75	140	110							60	140	110				965	995
12				75	140	110							60	140	110	1035	1065

规格 Size	尺寸 mm Dimensions in mm											
	齿轮箱 Gear units											
	a	A1	A2	b	B1	c	c1	d6	D5	e3	E	g
3	450	170	170	190	128	22	24±1	90	18	90	220	71
4	565	195	200	215	143	28	30±1	110	24	110	270	77.5
5	640	220	235	255	168	28	30±1	130	24	130	315	97.5
6	720	220	235	255	168	28	30±1	130	24	130	350	97.5
7	785	275	275	300	193	35	36±1	165	28	160	385	114
8	890	275	275	300	193	35	36±1	165	28	160	430	114
9	925	315	325	370	231	40	45±1.5	175	36	185	450	140
10	1025	315	325	370	231	40	45±1.5	175	36	185	500	140
11	1105	370	385	430	263	50	54±1.5	190	40	225	545	161
12	1260	370	385	430	263	50	54±1.5	190	40	225	615	161

规格 Size	尺寸 mm Dimensions in mm										
	齿轮箱 Gear units										
	G6	h	h5	H	m1	m3	n1	n2	n3	n4	s
3	455	175	100	360	290	160	80	65	285	132.5	15
4	530	200	100	415	355	180	105	85	345	150	19
5	605	230	130	482	430	220	105	100	405	180	19
6	640	230	130	482	510	220	105	145	440	180	19
7	720	280	170	572	545	260	120	130	500	215	24
8	765	280	160	582	650	260	120	190	545	215	24
9	845	320	175	662	635	320	145	155	585	245	28
10	895	320	175	662	735	320	145	205	635	245	28
11	1010	380	220	782	775	370	165	180	710	300	35
12	1080	380	210	790	930	370	165	265	780	300	35

规格 Size	尺寸 mm Dimensions in mm									润滑油 Lubrication (L)	重量 Weight (kg)
	输出轴 Output										
	B3SH			B3HH		B3DH					
	d2[1]	G2	l2	D2[2]	G4	D3	D4	G4	G5		
3	65	125	140	65	125	70	70	125	180	6	130
4	80	140	170	80	140	85	85	140	205	9	210
5	100	165	210	95	165	100	100	165	240	14	325
6	110	165	210	105	165	110	110	165	240	15	380
7	120	195	210	115	195	120	120	195	280	25	550
8	130	195	250	125	195	130	130	195	285	28	635
9	140	235	250	135	235	140	145	235	330	40	890
10	160	235	300	150	235	150	155	235	350	42	1020
11	170	270	300	165	270	165	170	270	400	66	1455
12	180	270	300	185	270	180	185	270	405	72	1730

直交轴齿轮箱 Bevel–helical Gear Units　三级传动 Three Stage　卧式安装 Horizontal
类型B3.H,B3.M　Types B3.H,B3.M　规格13...22　Sizes 13...22

B3SH B3HH B3DH

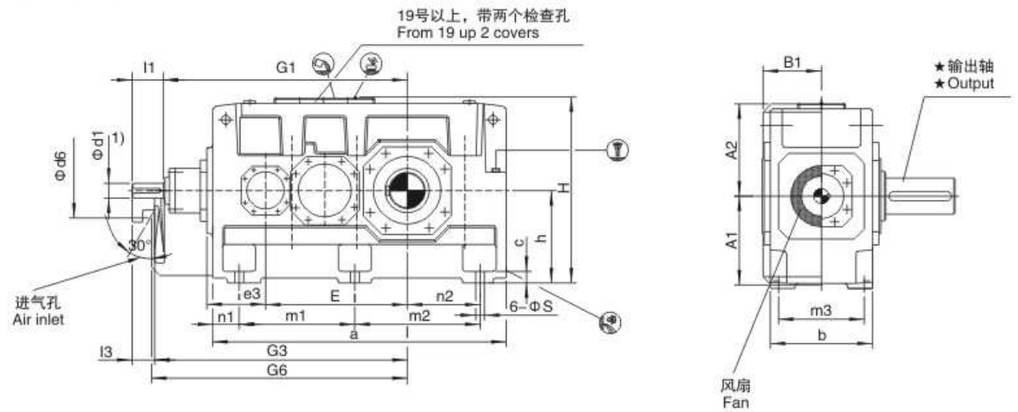

B3HM B3DM

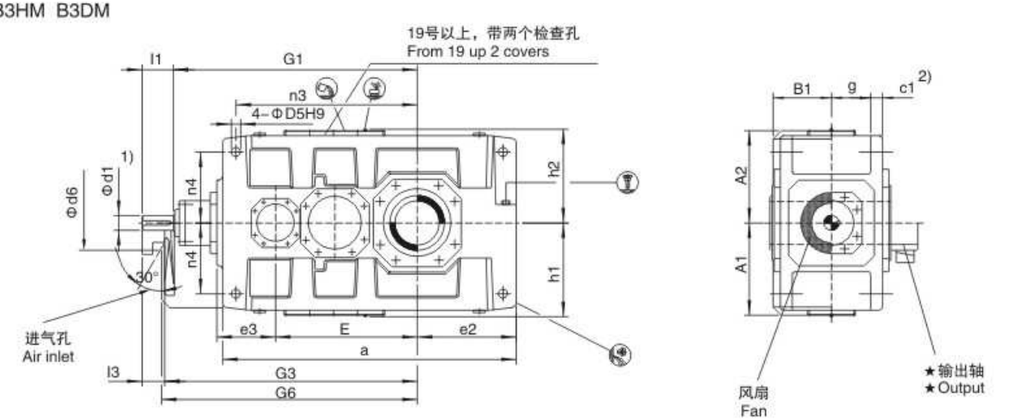

★ 输出轴 Output

B3SH
实心轴
Solid shaft

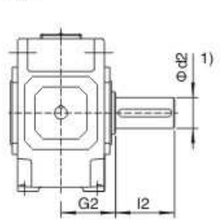

B3HH, B3HM
空心轴
Hollow shaft

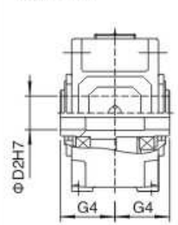

B3DH, B3DM
带胀紧盘的空心轴
Hollow shaft for shrink disk

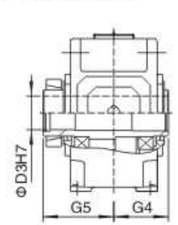

布置形式 Design

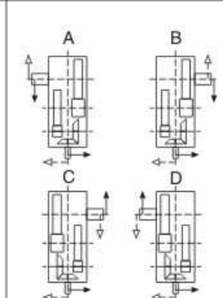

注：1) k6≤Φ50 m6>Φ50
2) 扭力支撑位于工作机侧。

Note：1) k6≤Φ50 m6>Φ50
2) Torque support on driven machine side.

H/B工业齿轮箱 GEAR UNITS

直交轴齿轮箱 Bevel–helical Gear Units　三级传动 Three Stage　卧式安装 Horizontal
类型B3.H,B3.M　Types B3.H,B3.M　规格13...22　Sizes 13...22

规格 Size	尺寸 mm Dimensions in mm																			
	输入轴 Input																			
	iN=12.5–45			iN=14–50			iN=16–56			iN=50–71			iN=56–80			iN=63–90			G1	G3
	d1 1)	l1	l3	d1 1)	l1	l3	d1 1)	l1	l3	d1 1)	l1	l3	d1 1)	l1	l3	d1 1)	l1	l3		
13	85	165	130							70	140	105							1125	1160
14							85	165	130							70	140	105	1195	1203
15	95	165	130							75	140	105							1367	1402
16				95	165	130							75	140	105				1413	1448
17	115	205	165							90	170	130							1560	1600
18				115	205	165							90	170	130				1620	1660
19	140	245	200							110	210	165							1832	1877
20				140	245	200							110	210	165				1892	1937
21	140	245	200							110	210	165							1902	1947
22				140	245	200							110	210	165				1957	2002

规格 Size	尺寸 mm Dimensions in mm												
	齿轮箱 Gear units												
	a	A1	A2	b	B1	c	c1	d6	D5	e2	e3	E	g
13	1290	425	435	550	325	60	61±2	210	48	405	265	635	211.5
14	1430	425	435	550	325	60	61±2	210	48	475	265	705	211.5
15	1550	485	520	625	365	70	72±2	210	55	485	320	762	238
16	1640	485	520	625	365	70	72±2	210	55	530	320	808	238
17	1740	535	570	690	395	80	81±2	230	55	525	370	860	259
18	1860	535	570	690	395	80	81±2	230	55	585	370	920	259
19	2010	610	630	790	448	90	91±2	245	65	590	420	997	299
20	2130	610	630	790	448	90	91±2	245	65	650	420	1057	299
21	2140	690	690	830	473	100	100±2	280	75	655	450	1067	310
22	2250	690	690	830	473	100	100±2	280	75	710	450	1122	310

规格 Size	尺寸 mm Dimensions in mm												
	齿轮箱 Gear units												
	G6	h	h1	h2	H	m1	m2	m3	n1	n2	n3	n4	s
13	1180	440	450	460	900	545	545	475	100	305	835	340	35
14	1250	440	450	460	900	545	685	475	100	375	905	340	35
15	1420	500	490	500	1000	655	655	535	120	365	1005	375	42
16	1470	500	490	500	1000	655	745	535	120	410	1050	375	42
17	1620	550	555	560	1110	735	735	600	135	390	1145	425	42
18	1680	550	555	560	1110	735	855	600	135	450	1205	425	42
19	1900	620	615	620	1240	850	850	690	155	435	1345	475	48
20	1960	620	615	620	1240	850	970	690	155	495	1405	475	48
21	1970	700	685	690	1390	900	900	720	170	485	1400	520	56
22	2025	700	685	690	1390	900	1010	720	170	540	1455	520	56

规格 Size	尺寸 mm Dimensions in mm									润滑油 (L) Lubrication		重量 (kg) Weight	
	输出轴 Output												
	B3SH			B3HH B3HM		B3DH B3DM				B3.H	B3.M	B3.H	B3.M
	d2 1)	G2	l2	D2 2)	G4	D3	D4	G4	G5	(L)	(L)	(kg)	(kg)
13	200	335	350	190	335	190	195	335	480	130	10	2380	2260
14	210	335	350	210	335	210	215	335	480	140	115	2750	2615
15	230	380	410	230	380	230	235	380	550	210	160	3730	3540
16	240	380	410	240	380	240	245	380	550	220	165	3955	3765
17	250	415	410	250	415	250	260	415	600	290	230	4990	4760
18	270	415	470	275	415	280	285	415	600	300	235	5495	5240
19	290	465	470			285	295	465	670	380	360	7000	6500
20	300	465	500			310	315	465	670	440	420	8100	7600
21	320	490	500			330	335	490	715	370	420	9200	8600
22	340	490	550			340	345	490	725	430	490	9900	9400

直交轴齿轮箱 Bevel–helical Gear Units　四级传动 Four Stage　卧式安装 Horizontal
类型B4.H　Types B4.H　规格5...12　Sizes 5...12

B4SH B4HH B4DH

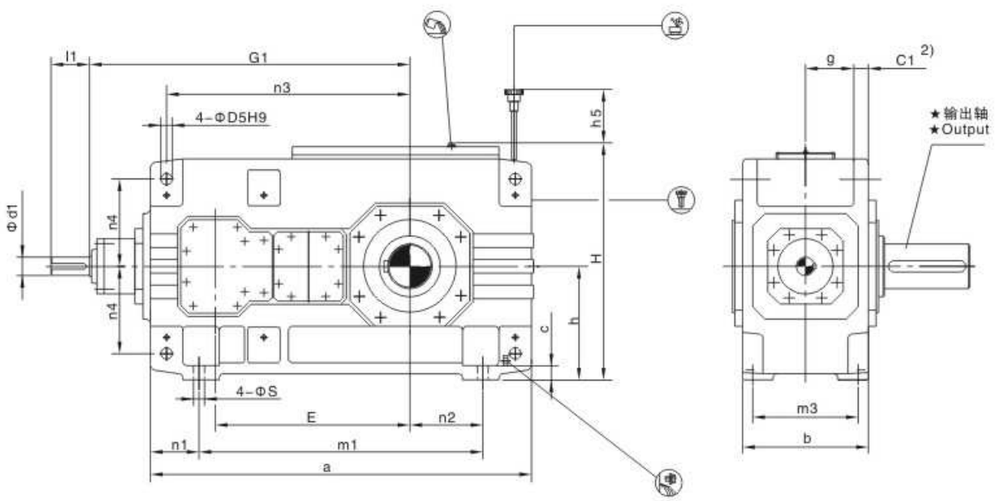

★ 输出轴 Output

B4SH
实心轴
Solid shaft

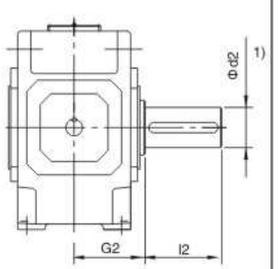

B4HH, B4HM
空心轴
Hollow shaft

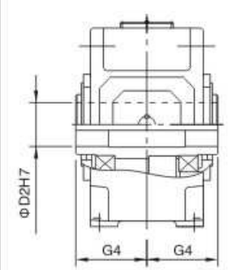

B4DH, B4DM
带胀紧盘的空心轴
Hollow shaft for shrink disk

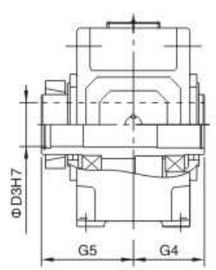

布置形式 Design

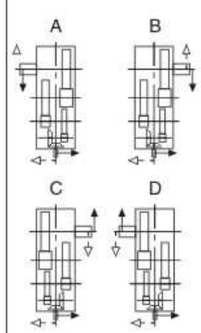

注：1）k6≤Φ50　m6＞Φ50
　　2）扭力支撑位于工作机侧

Note：1）k6≤Φ50　m6＞Φ50
　　2）Torque support on driven machine side

直交轴齿轮箱 Bevel–helical Gear Units　四级传动 Four Stage　卧式安装 Horizontal
类型B4.H　Types B4.H　规格5...12　Sizes 5...12

规格 Size	尺寸 mm Dimensions in mm								
	输入轴 Input								G1
	iN=80–180		iN=100–224		iN=200–315		iN=250–400		
	d1 1)	l1	d1 1)	l1	d1 1)	l1	d1 1)	l1	
5	35	80			25	50			615
6			35	80			25	50	650
7	35	80			30	60			725
8			35	80			30	60	770
9	45	110			35	80			840
10			45	110			35	80	890
11	50	110			40	80			1010
12			50	110			40	80	1080

规格 Size	尺寸 mm Dimensions in mm																
	齿轮箱 Gear units																
	a	b	c	c1	D5	E	g	h	h5	H	m1	m3	n1	n2	n3	n4	s
5	690	255	28	30±1	24	405	97.5	230	100	482	480	220	105	100	455	180	19
6	770	255	28	30±1	24	440	97.5	230	100	482	560	220	105	145	490	180	19
7	845	300	35	36±1	28	495	114	280	140	572	605	260	120	130	560	215	24
8	950	300	35	36±1	28	540	114	280	130	582	710	260	120	190	605	215	24
9	1000	370	40	45±15	36	580	140	320	135	662	710	320	145	155	660	245	28
10	1100	370	40	45±15	36	630	140	320	135	662	810	320	145	205	710	245	28
11	1200	430	50	54±15	40	705	161	380	170	782	870	370	165	180	805	300	35
12	1355	430	50	54±15	40	775	161	380	160	790	1025	370	165	265	875	300	35

规格 Size	尺寸 mm Dimensions in mm									润滑油 Lubrication (L)	重量 Weight (kg)
	输出轴 Output										
	B4SH			B4HH		B4DH					
	d2 1)	G2	l2	D2 2)	G4	D3	D4	G4	G5		
5	100	165	210	95	165	100	100	165	240	16	335
6	110	165	210	105	165	110	110	165	240	18	385
7	120	195	210	115	195	120	120	195	280	30	555
8	130	195	250	125	195	130	130	195	285	33	655
9	140	235	250	135	235	140	145	235	330	48	890
10	160	235	300	150	235	150	155	235	350	50	1025
11	170	270	300	165	270	165	170	270	400	80	1485
12	180	270	300	180	270	180	185	270	405	90	1750

直交轴齿轮箱 Bevel–helical Gear Units　四级传动 Four Stage　卧式安装 Horizontal
类型B4.H,B4.M　Types B4.H,B4.M　规格13...22　Sizes 13...22

B4SH B4HH B4DH

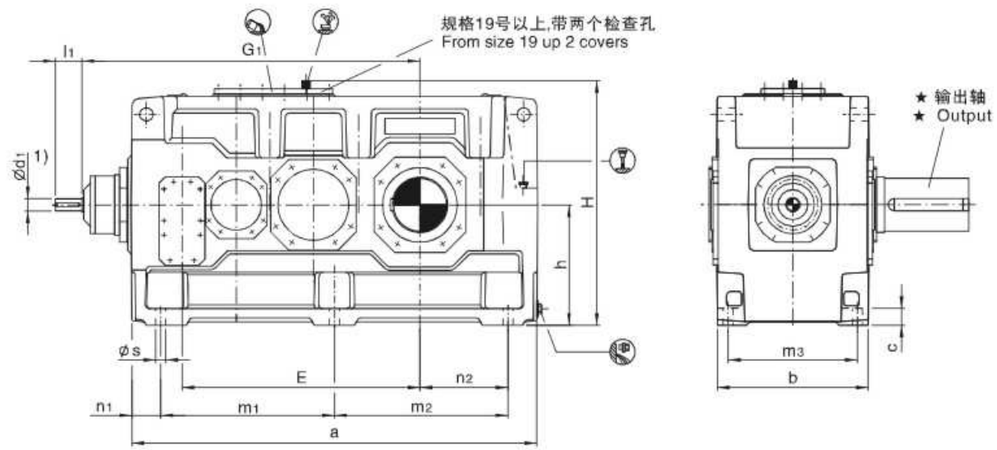

B4HM B4DM

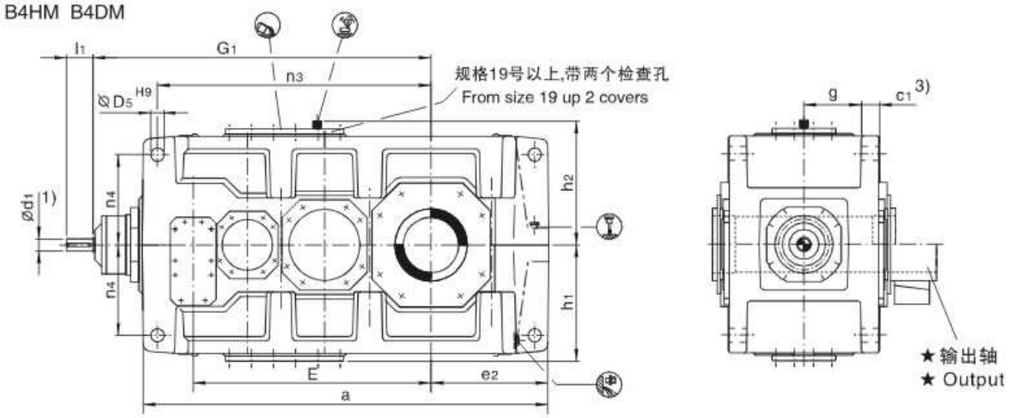

★ 输出轴 Output

B4SH
实心轴
Solid shaft

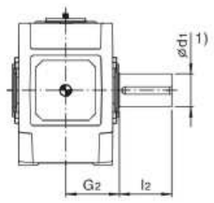

B4HH, B4HM
空心轴
Hollow shaft

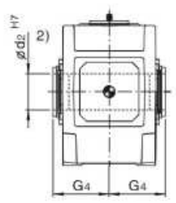

B4DH, B4DM
带胀紧盘的空心轴
Hollow shaft for shrink disk

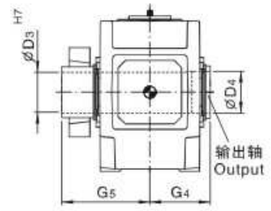

布置形式 Design

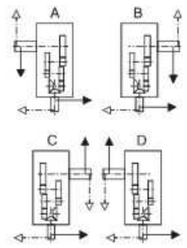

注：1) k6≤Φ50 m6>Φ50
2) 键槽GB/T1095–1979。
3) 扭力支撑位于工作机侧。

Note：1) k6≤Φ50 m6>Φ50
2) Keyway GB/T1095–1979.
3) Torque support on driven machine side.

直交轴齿轮箱 Bevel–helical Gear Units　四级传动 Four Stage　卧式安装 Horizontal
类型B4.H,B4.M　Types B4.H,B4.M　规格13...22　Sizes 13...22

规格 Size	尺寸 mm Dimensions in mm												
	输入轴 Input												G1
	iN=80–180		iN=90–200		iN=100–224		iN=200–315		iN=224–355		iN=250–400		
	d1 1)	l1	d1 1)	l1	d1 1)	l1	d1 1)	l1	d1 1)	l1		l1	
13	60	110					50	100					1170
14					60	110					50	100	1240
15	75	135					60	110					1402
16			75	135					60	110			1448
17	75	135					60	110					1450
18			75	135					60	110			1510
19	85	165					70	140					1680
20			85	165					70	140			1740
21	95	165					75	140					1992
22			95	165					75	140			2047

规格 Size	尺寸 mm Dimensions in mm									
	齿轮箱 Gear units									
	a	b	c	c1	D5	e2	E	g	h	h1
13	1395	550	60	61 ± 2	48	405	820	211.5	440	450
14	1535	550	60	61 ± 2	48	475	890	211.5	440	450
15	1680	625	70	72 ± 2	55	485	987	238	500	490
16	1770	625	70	72 ± 2	55	530	1033	238	500	490
17	1770	690	80	81 ± 2	55	525	1035	259	550	555
18	1890	690	80	81 ± 2	55	585	1095	259	550	555
19	2030	790	90	91 ± 2	65	590	1190	299	620	615
20	2150	790	90	91 ± 2	65	650	1250	299	620	615
21	2340	830	100	100 ± 2	75	655	1387	310	700	685
22	2450	830	100	100 ± 2	75	710	1442	310	700	685

规格 Size	尺寸 mm Dimensions in mm									
	齿轮箱 Gear units									
	h2	H	m1	m2	m3	n1	n2	n3	n4	s
13	460	900	597.5	597.5	475	100	305	940	340	35
14	460	900	597.5	737.5	475	100	375	1010	340	35
15	500	1000	720	720	535	120	365	1135	375	42
16	500	1000	720	810	535	120	410	1180	375	42
17	560	1110	750	750	600	135	390	1175	425	42
18	560	1110	750	870	600	135	450	1235	425	42
19	620	1240	860	860	690	155	435	1365	475	48
20	620	1240	860	980	690	155	495	1425	475	48
21	690	1390	1000	1000	720	170	485	1615	520	56
22	690	1390	1000	1110	720	170	540	1670	520	56

规格 Size	尺寸 mm Dimensions in mm									润滑油 Lubrication (L)		重量 Weight (kg)	
	输出轴 Output												
	B4SH			B4HH B4HM		B4DH B4DM				B4.H	B4.M	B4.H	B4.M
	d2 1)	G2	l2	D2 2)	G4	D3	D4	G4	G5	(L)	(L)	(kg)	(kg)
13	200	335	350	190	335	190	195	335	480	145	120	2395	2280
14	210	335	350	210	335	210	215	335	480	150	125	2735	2605
15	230	380	410	230	380	230	235	380	550	230	170	3630	3435
16	240	380	410	240	380	240	245	380	550	235	175	3985	3765
17	250	415	410	250	415	250	260	415	600	295	230	4695	4460
18	270	415	470	275	415	280	285	415	600	305	235	5200	4930
19	290	465	470	–	–	285	295	465	670	480	440	6800	6300
20	300	465	500	–	–	310	315	465	670	550	510	8200	7700
21	320	490	500	–	–	330	335	490	715	540	590	9200	8600

平行轴齿轮箱 Helical Gear Units　　二级传动 Two Stage　　立式安装 Vertical
类型H2.V　Types H2.V　　规格3...12　Sizes 3...12

H2SV H2HV H2DV
采用浸油润滑 With dip lubrication

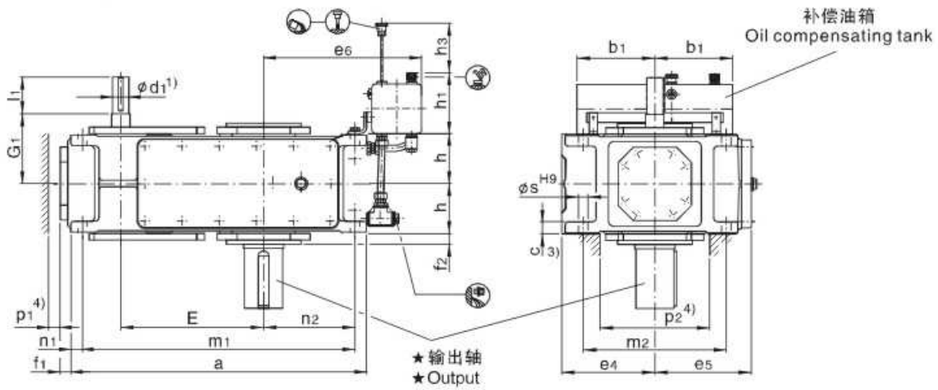

H2SV H2HV H2DV
采用强制润滑 With forced lubrication

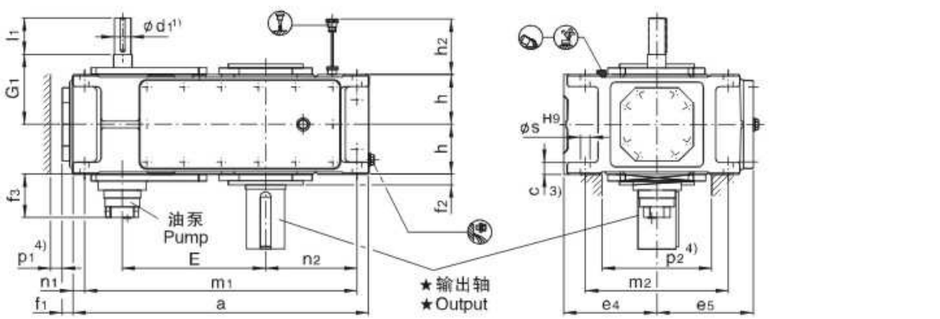

★ 输出轴 Output

H2SV
实心轴
Solid shaft

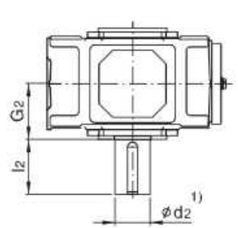

H2HV
空心轴
Hollow shaft

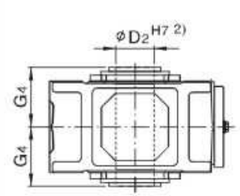

H2DV
带胀紧盘的空心轴
Hollow shaft for shrink disk

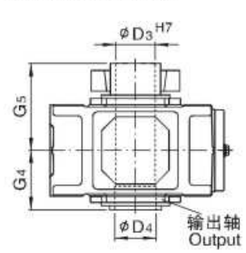

布置形式 A+D 根据用户要求供货
Design A+D on request

布置形式 Design

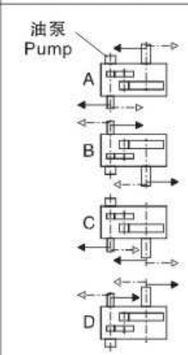

注：1) k6≤Φ50 m6>Φ50
2) 键槽GB/T1095–1979。
3) 扭力支撑位于工作机侧。
4) 有关油泵、油管和护盖的安装空间及确切尺寸，请与我们联系。

Note：1) k6≤Φ50 m6>Φ50
2) Keyway GB/T1095–1979.
3) Torque support on driven machine side
4) Space for pump, pipes and cover, for exact dimension, please refer to us.

平行轴齿轮箱 Helical Gear Units　　二级传动 Two Stage　　立式安装 Vertical
类型H2.V　Types H2.V　　规格3...12　Sizes 3...12

规格 Size	尺寸 mm Dimensions in mm								
	输入轴 Input								
	iN=6.3–11.2		iN=8–14		iN=12.5–22.4		iN=16–28		G1
	d1[1]	l1	d1[1]	l1	d1[1]	l1	d1[1]	l1	
3	45	100			35	80			135
4	50	100			40	80			170
5	50	100			38	80			195
6			50	100			38	80	195
7	60	135			50	110			210
8			60	135			50	110	210
9	75	140			60	140			240
10			75	140			60	140	240
11	90	165			70	140			275
12			90	165			70	140	275

规格 Size	尺寸 mm Dimensions in mm									
	齿轮箱 Gear units									
	a	b1	c	e4	e5	e6	E	f1	f2	f3
3	450	150	24±1	175	185	290	220	28	20	–
4	565	150	30±1	200	215	320	270	28	22	–
5	640	240	30±1	230	252	385	315	38	28	150
6	720	240	30±1	230	252	425	350	38	28	150
7	785	240	36±1	280	292	425	385	42	30	145
8	890	240	36±1	280	302	485	430	42	32	145
9	925	330	45±1.5	320	342	560	450	42	32	135
10	1025	330	45±1.5	320	342	610	500	42	32	135
11	1105	330	54±1.5	380	402	595	545	48	35	145
12	1260	330	54±1.5	380	410	680	615	48	35	145

规格 Size	尺寸 mm Dimensions in mm										
	齿轮箱 Gear units										
	h	h1	h2	h3	m1	m2	n1	n2	p1[4]	p2[4]	s
3	95	165	–	180	410	265	20	125	35	210	18
4	107.5	165	–	180	505	300	30	160	35	220	24
5	127.5	205	190	240	580	360	30	175	35	270	24
6	127.5	205	190	240	660	360	30	220	35	270	24
7	150	205	165	250	715	430	35	215	35	330	28
8	150	205	165	250	820	430	35	275	35	330	28
9	185	275	205	330	845	490	40	260	40	370	36
10	185	275	205	330	945	490	40	310	40	370	36
11	215	275	240	340	1005	600	50	295	50	440	40
12	215	275	240	340	1160	600	50	380	50	440	40

规格 Size	尺寸 mm Dimensions in mm									润滑油 Lubrication		重量 Weight (kg)
	输出轴 Output									浸油润滑 Dip lubrication (L)	强制润滑 Forced lubrication (L)	
	H2SV			H2HV		H2DV						
	d2[1]	G2	l2	D2[2]	G4	D3	D4	G4	G5			
3	65	125	140	65	125	70	70	125	180	14	–	115
4	80	140	170	80	140	85	85	140	205	25	–	190
5	100	165	210	95	165	100	100	165	240	23	10	300
6	110	165	210	105	165	110	110	165	240	27	11	355
7	120	195	210	115	195	120	120	195	280	58	22	505
8	130	195	250	125	195	130	130	195	285	62	25	590
9	140	235	250	135	235	140	145	235	330	100	42	830
10	160	235	300	150	235	150	155	235	350	110	46	960
11	170	270	300	165	270	165	170	270	400	160	60	1335
12	180	270	300	180	270	180	185	270	405	180	70	1615

平行轴齿轮箱 Helical Gear Units　　二级传动 Two Stage　　立式安装 Vertical

类型H2.V　Types H2.V　　规格13...18　Sizes 13...18

H2SV H2HV H2DV
采用强制润滑 With forced lubrication

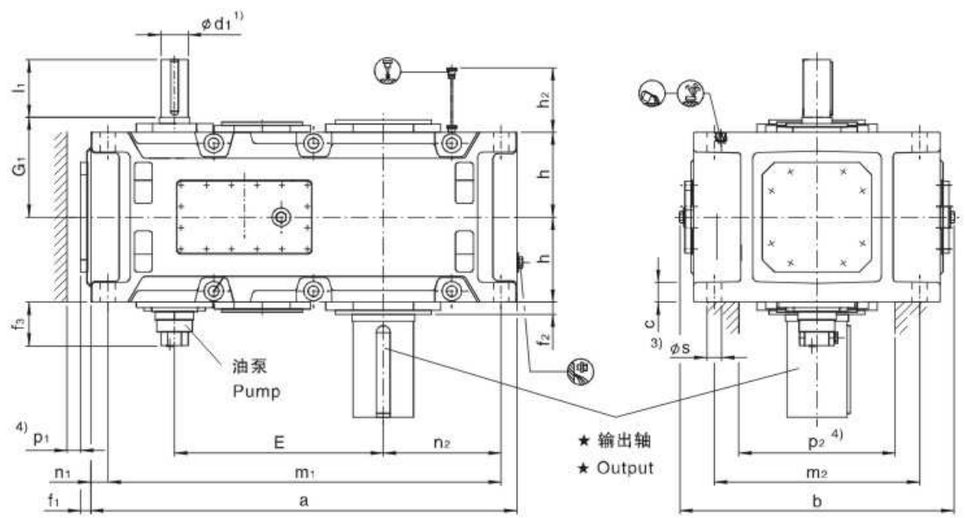

★ 输出轴 Output

H2SV
实心轴
Solid shaft

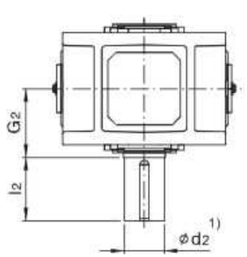

H2HV
空心轴
Hollow shaft

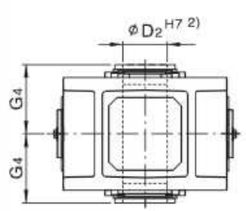

H2DV
带胀紧盘的空心轴
Hollow shaft for shrink disk

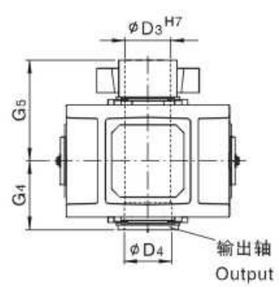

布置形式 A+D 根据用户要求供货
Design A+D on request

布置形式 Design

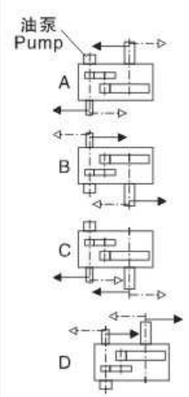

注：1) k6≤Φ50　m6>Φ50
2) 键槽GB/T1095-1979。
3) 扭力支撑位于工作机侧。
4) 有关油泵、油管和护盖的安装空间及确切尺寸，请与我们联系。
5) 规格13和15速比只有iN=6.3-18；规格17：iN=6.3-16

Note：1) k6≤Φ50　m6>Φ50
2) Keyway GB/T1095-1979.
3) Torque support on driven machine side
4) Space for pump, pipes and cover, for exact dimension, please refer to us.
5) Size 13 and 15: only iN=6.3-18, Size 17: only iN=6.3-16

平行轴齿轮箱 Helical Gear Units　　二级传动 Two Stage　　立式安装 Vertical

类型H2.V　Types H2.V　　规格13...18　Sizes 13...18

规格 Size	尺寸 mm Dimensions in mm												
	输入轴 Input												
	iN=6.3-11.2		iN=7.1-12.5		iN=8-14		iN=12.5-20		iN=14-22.4		iN=16-25		G1
	d1 1)	l1	d1 1)	l1	d1 1)	l1	d1 1)	l1	d1 1)	l1	d1 1)	l1	
13	100	205					85	170					330
14					100	205					85	170	330
15	120	210					100	210					365
16			120	210					100	210			365
17	125	245					110	210					420
18			125	245					110	210			420
19						根据用户要求供货 On request							
20													
21													
22													

规格 Size	尺寸 mm Dimensions in mm															
	齿轮箱 Gear units															
	a	b	c	E	f1	f2	f3	h	h2	m1	m2	n1	n2	p1 4)	p2 4)	s
13	1290	900	61±2	635	53	35	130	272.5	300	1195	680	50	360	50	500	48
14	1430	900	61±2	705	53	35	130	272.5	300	1335	680	50	430	50	500	48
15	1550	980	72±2	762	63	42	130	310	340	1435	750	60	430	50	570	55
16	1640	980	72±2	808	63	42	130	310	340	1525	750	60	475	50	570	55
17	1740	1110	81±2	860	60	42	170	340	374	1610	850	70	465	70	630	55
18	1860	1110	81±2	920	60	42	170	340	374	1730	850	70	525	70	630	55
19							根据用户要求供货 On request									
20																
21																
22																

规格 Size	尺寸 mm Dimensions in mm									润滑油 Lubrication (L)	重量 Weight (kg)
	输出轴 Output										
	H2SV			H2HV 5)		H2DV 5)					
	d2 1)	G2	l2	D2 2)	G4	D3	D4	G4	G5		
13	200	335	350	190	335	190	195	335	480	80	1880
14	210	335	350	210	335	210	215	335	480	90	2430
15	230	380	410	230	380	230	235	380	550	140	3240
16	240	380	410	240	380	240	245	380	550	150	3465
17	250	415	410	250	415	250	260	415	600	175	4420
18	270	415	470	275	415	280	285	415	600	185	4870
19					根据用户要求供货 On request						
20											
21											
22											

平行轴齿轮箱 Helical Gear Units
类型H3.V Types H3.V

三级传动 Three Stage
规格5...12 Sizes 5...12

立式安装 Vertical

H3SV H3HV H3DV
采用浸油润滑 With dip lubrication

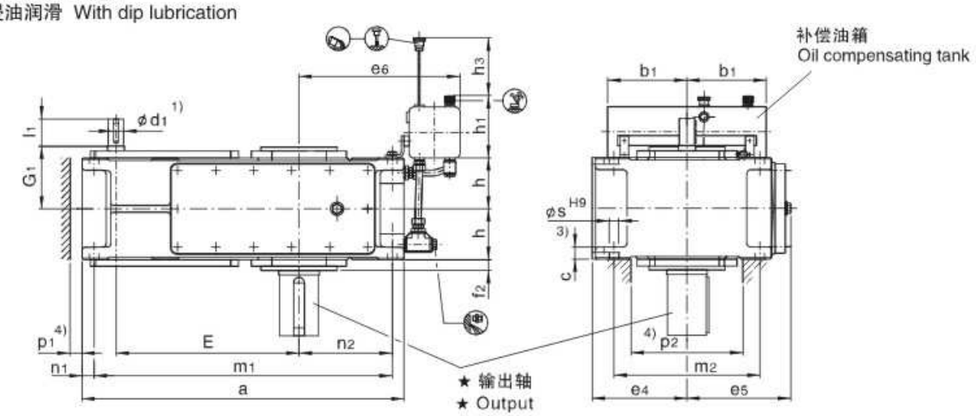

H3SV H3HV H3DV
采用强制润滑 With forced lubrication

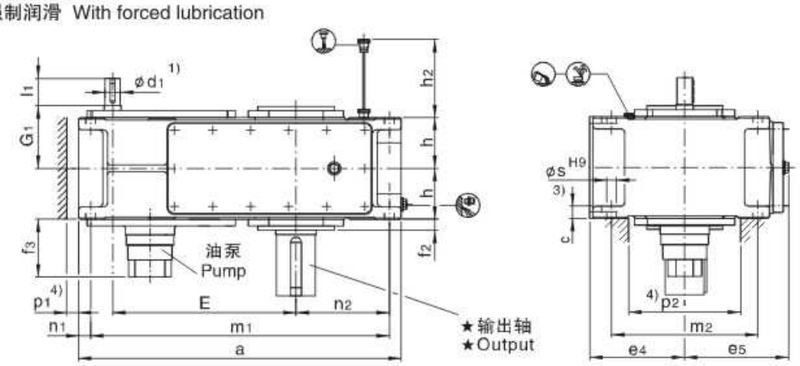

★ 输出轴 Output

H3SV
实心轴
Solid shaft

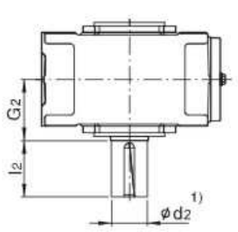

H3HV
空心轴
Hollow shaft

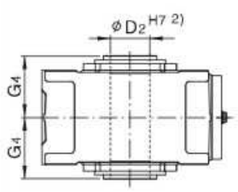

H3DV
带胀紧盘的空心轴
Hollow shaft for shrink disk

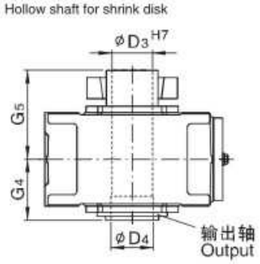

布置形式 A+D 根据用户要求供货
Design A+D on request

布置形式 Design

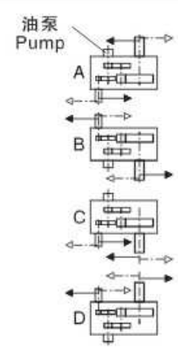

注：1) k6≤Φ50 m6>Φ50
2) 键槽GB/T1095-1979。
3) 扭力支撑位于工作机侧。
4) 有关油泵、油管和护盖的安装空间及确切尺寸，请与我们联系。

Note：1) k6≤Φ50 m6>Φ50
2) Keyway GB/T1095-1979.
3) Torque support on driven machine side
4) Space for pump, pipes and cover, for exact dimension, please refer to us.

平行轴齿轮箱 Helical Gear Units
类型H3.V Types H3.V

三级传动 Three Stage
规格5...12 Sizes 5...12

立式安装 Vertical

规格 Size	尺寸 mm Dimensions in mm												
	输入轴 Input												
	iN=24~45		iN=31.5~56		iN=50~63		iN=63~80		iN=71~90		iN=90~112		G1
	d1[1]	l1	d1[1]	l1	d1[1]	l1	d1[1]	l1	d1[1]	l1	d1[1]	l1	
5	40	80			30	60			24	60			160
6			40	80			30	60			24	60	160
7	45	110			35	80			28	70			185
8			45	110			35	80			28	70	185
9	60	140			45	110			32	90			230
10			60	110			45	110			32	90	230
11	70	140			50	110			42	100			255
12			70	140			50	110			42	100	255

规格 Size	尺寸 mm Dimensions in mm									
	齿轮箱 Gear units									
	a	b1	c	e4	e5	e6	E	f2	f3	h
5	690	240	30±1	230	252	385	405	28	190	127.5
6	770	240	30±1	230	252	425	440	28	190	127.5
7	845	240	36±1	280	292	425	495	30	185	150
8	950	240	36±1	280	312	485	540	32	185	150
9	1000	330	45±1.5	320	342	560	580	32	170	185
10	1100	330	45±1.5	320	342	610	630	32	170	185
11	1200	330	54±1.5	380	402	595	705	35	170	215
12	1355	330	54±1.5	380	410	680	775	35	170	215

规格 Size	尺寸 mm Dimensions in mm									
	齿轮箱 Gear units									
	h1	h2	h3	m1	m2	n1	n2	p1[4]	p2[4]	s
5	205	190	240	630	360	30	175	35	270	24
6	205	190	240	710	360	30	220	35	270	24
7	205	165	250	775	430	35	215	35	330	28
8	205	165	250	880	430	35	275	35	330	28
9	275	205	330	920	490	40	260	40	370	36
10	275	205	330	1020	490	40	310	40	370	36
11	275	240	340	1100	600	50	295	50	440	40
12	275	240	340	1255	600	50	380	50	440	40

规格 Size	尺寸 mm Dimensions in mm									润滑油 Lubrication		重量 Weight (kg)
	输出轴 Outpu									浸油润滑 Dip lubrication (L)	强制润滑 Forced lubrication (L)	
	H3SV			H3HV		H3DV						
	d2[1]	G2	l2	D2[2]	G4	D3	D4	G4	G5			
5	100	165	210	95	165	100	100	165	240	35	13	320
6	110	165	210	105	165	110	110	165	240	37	15	365
7	120	195	210	115	195	120	120	195	280	60	25	540
8	130	195	250	125	195	130	130	195	285	72	30	625
9	140	235	250	135	235	140	145	235	330	100	40	875
10	160	235	300	150	235	150	155	235	350	110	45	1020
11	170	270	300	165	270	165	170	270	400	170	66	1400
12	180	270	300	180	270	180	185	270	405	190	75	1675

平行轴齿轮箱 Helical Gear Units　　三级传动 Three Stage　　立式安装 Vertical

类型H3.V　Types H3.V　　规格13...18　Sizes 13...18

H3SV H3HV H3DV
采用强制润滑 With forced lubrication

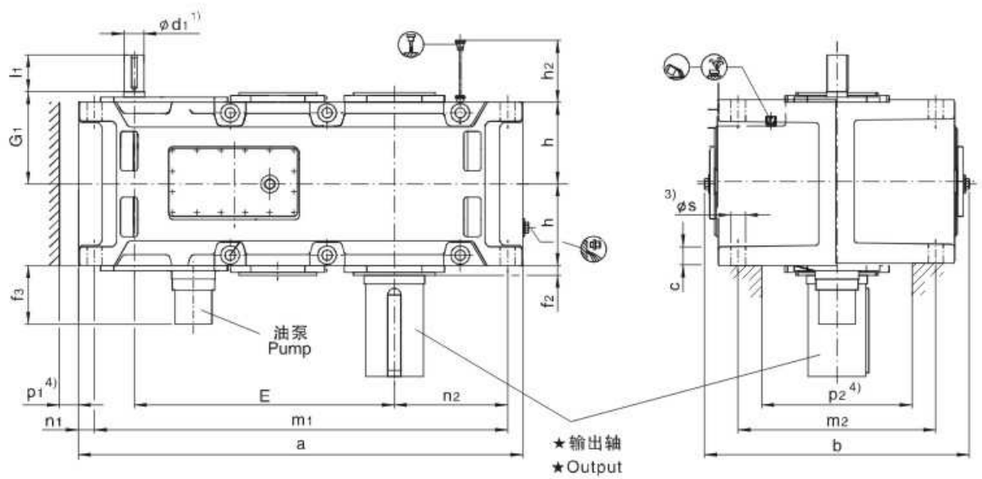

★ 输出轴 Output　　布置形式 Design

H3SV
实心轴
Solid shaft

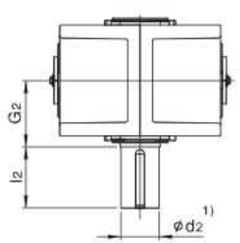

H3HV
空心轴
Hollow shaft

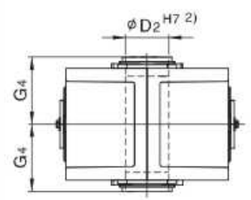

H3DV
带胀紧盘的空心轴
Hollow shaft for shrink disk

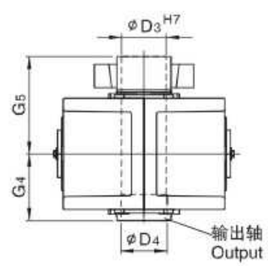

布置形式 A+D 根据用户要求供货
Design A+D on request

油泵
Pump

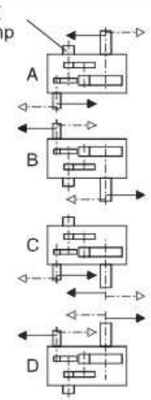

注：1) k6≤Φ50　m6>Φ50
2) 键槽GB/T1095-1979。
3) 扭力支撑位于工作机侧。
4) 有关油泵、油管和护盖的安装空间及确切尺寸，请与我们联系。

Note：1) k6≤Φ50　m6>Φ50
2) Keyway GB/T1095-1979.
3) Torque support on driven machine side
4) Space for pump, pipes and cover, for exact dimension, please refer to us.

平行轴齿轮箱 Helical Gear Units　　三级传动 Three Stage　　立式安装 Vertical

类型H3.V　Types H3.V　　规格13...18　Sizes 13...18

规格 Size	尺寸 mm Dimensions in mm																		
	输入轴 Input																		
	iN=22.4–45		iN=25–50		iN=28–56		iN=50–63		iN=56–71		iN=63–80		iN=71–90		iN=80–100		iN=90–112		G1
	d1 1)	l1	d1 1)	l1	d1 1)	l1	d1 1)	l1	d1 1)	l1	d1 1)	l1	d1 1)	l1	d1 1)	l1	d1 1)	l1	
13	85	160					60	135					50	110					310
14					85	160					60	135					50	110	310
15	100	200					75	140					60	140					350
16			100	200					75	140					60	140			350
17	100	200					75	140					60	140					380
18			100	200					75	140					60	140			380
19						根据用户要求供货 On request													
20																			
21																			
22																			

规格 Size	尺寸 mm Dimensions in mm														
	齿轮箱 Gear units														
	a	b	c	E	f2	f3	h	h2	m1	m2	n1	n2	p1 4)	p2 4)	s
13	1395	900	61±2	820	35	170	272.5	300	1300	680	50	360	50	500	48
14	1535	900	61±2	890	35	170	272.5	300	1440	680	50	430	50	500	48
15	1680	980	72±2	987	42	170	310	340	1565	750	60	430	50	570	55
16	1770	980	72±2	1033	42	170	310	340	1655	750	60	475	50	570	55
17	1770	1110	81±2	1035	42	210	340	374	1640	850	70	465	70	630	55
18	1890	1110	81±2	1095	42	210	340	374	1760	850	70	525	70	630	55
19						根据用户要求供货 On request									
20															
21															
22															

规格 Size	尺寸 mm Dimensions in mm									润滑油 Lubrication (L)	重量 Weight (kg)
	输出轴 Output										
	H3SV			H3HV		H3DV					
	d2 1)	G2	l2	D2 2)	G4	D3	D4	G4	G5		
13	200	335	350	190	335	190	195	335	480	115	2155
14	210	335	350	210	335	210	215	335	480	126	2490
15	230	380	410	230	380	230	235	380	550	180	3260
16	240	380	410	240	380	240	245	380	550	190	3625
17	250	415	410	250	415	250	260	415	600	190	4250
18	270	415	470	275	415	280	285	415	600	200	4740
19					根据用户要求供货 On request						
20											
21											
22											

平行轴齿轮箱 Helical Gear Units　　四级传动 Four Stage　　立式安装 Vertical

类型H4.V　Types H4.V　　规格7...12　Sizes 7...12

H4SV H4HV H4DV
采用浸油润滑 With dip lubrication

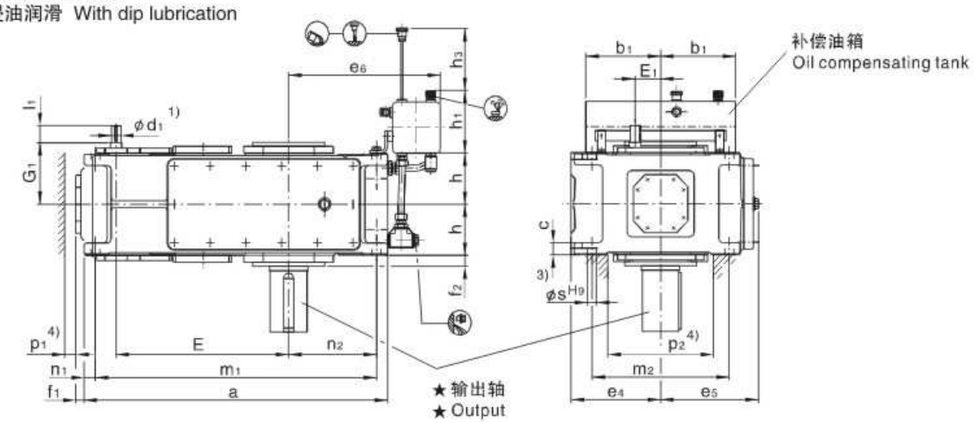

H4SV H4HV H4DV
采用强制润滑 With forced lubrication

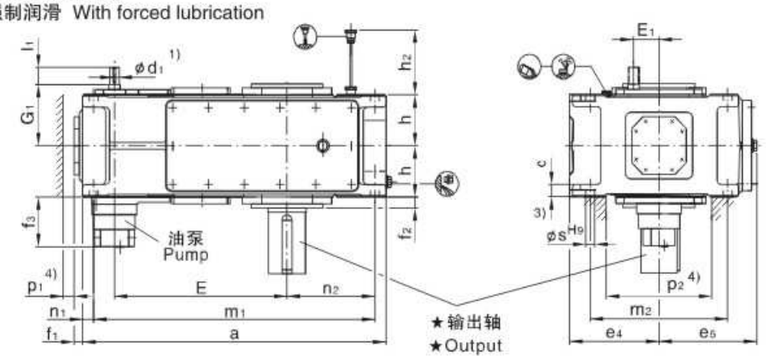

★ 输出轴 Output　　布置形式 Design

H4SV
实心轴
Solid shaft

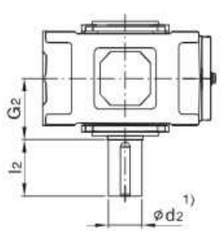

H4HV
空心轴
Hollow shaft

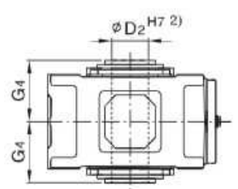

H4DV
带胀紧盘的空心轴
Hollow shaft for shrink disk

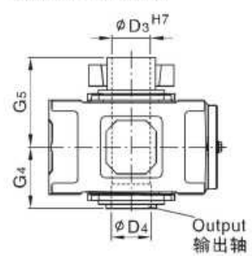

布置形式 A+D 根据用户要求供货
Design A+D on request

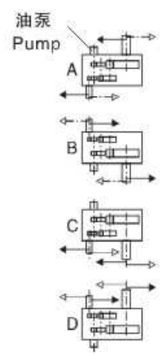

注：1) k6≤Φ50 m6>Φ50
2) 键槽GB/T1095-1979。
3) 扭力支撑位于工作机侧。
4) 有关油泵、油管和护盖的安装空间及确切尺寸，请与我们联系。

Note：1) k6≤Φ50 m6>Φ50
2) Keyway GB/T1095-1979.
3) Torque support on driven machine side
4) Space for pump, pipes and cover, for exact dimension, please refer to us.

平行轴齿轮箱 Helical Gear Units　　四级传动 Four Stage　　立式安装 Vertical

类型H4.V　Types H4.V　　规格7...12　Sizes 7...12

规格 Size	尺寸 mm Dimensions in mm28								
	输入轴 Input								
	iN=100-180		iN=125-224		iN=200-355		iN=250-450		G1
	d1[1]	l1	d1[1]	l1	d1[1]	l1	d1[1]	l1	
7	30	60			24	50			180
8			30	60			24	50	180
9	35	80			28	60			215
10			35	80			28	60	215
11	45	110			32	80			250
12			45	110			32	80	250

规格 Size	尺寸 mm Dimensions in mm										
	齿轮箱 Gear units										
	a	b1	c	e4	e5	e6	E	E1	l1	f2	f3
7	845	240	36±1	280	292	425	495	80	37	30	160
8	950	240	36±1	280	302	485	540	80	37	32	160
9	1000	330	45±1.5	320	342	560	580	90	43	32	170
10	1100	330	45±1.5	320	342	610	630	90	43	32	170
11	1200	330	54±1.5	380	402	595	705	110	47	35	170
12	1355	330	54±1.5	380	410	680	775	110	47	35	170

规格 Size	尺寸 mm Dimensions in mm										
	齿轮箱 Gear units										
	h	h1	h2	h3	m1	m2	n1	n2	p1[4]	p2[4]	s
7	150	205	165	250	775	430	35	215	35	330	28
8	150	205	165	250	880	430	35	275	35	330	28
9	185	275	205	330	920	490	40	260	40	370	36
10	185	275	205	330	1020	490	40	310	40	370	36
11	215	275	240	340	1100	600	50	295	50	440	40
12	215	275	240	340	1255	600	50	380	50	440	40

规格 Size	尺寸 mm Dimensions in mm									润滑油 Lubrication		重量 Weight (kg)
	输出轴 Output									浸油润滑 Dip lubrication (L)	强制润滑 Forced lubrication (L)	
	H4SV			H4HV		H4DV						
	d2[1]	G2	l2	D2[2]	G4	D3	D4	G4	G5			
7	120	195	210	115	195	120	120	195	280	50	20	550
8	130	195	250	125	195	130	130	195	285	60	25	645
9	140	235	250	135	235	140	145	235	330	95	38	875
10	160	235	300	150	235	150	155	235	350	110	45	1010
11	170	270	300	165	270	165	170	270	400	165	65	1460
12	180	270	300	180	270	180	185	270	405	180	75	1725

平行轴齿轮箱 Helical Gear Units　　四级传动 Four Stage　　立式安装 Vertical

类型H4.V　Types H4.V　　规格13...18　Sizes 13...18

H4SV H4HV H4DV
采用强制润滑 With forced lubrication

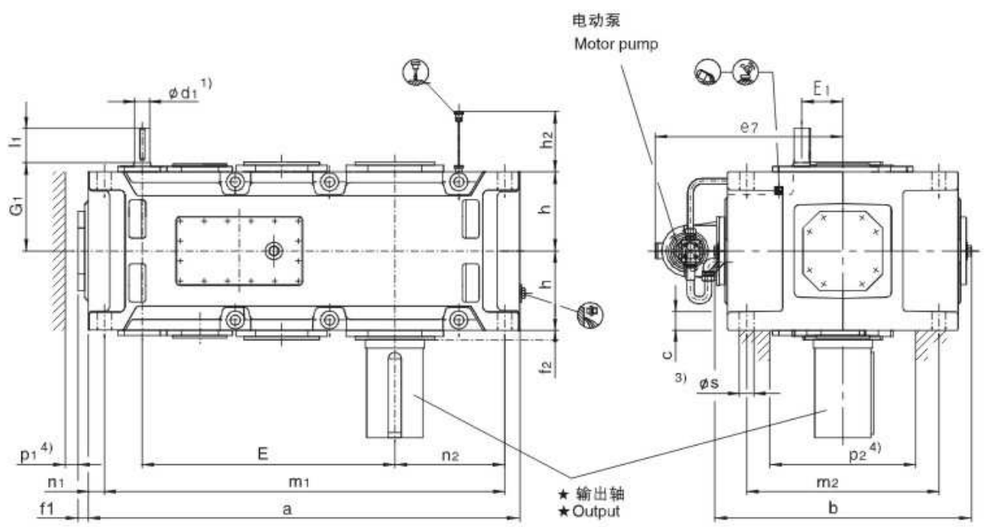

★ 输出轴 Output　　布置形式 Design

H4SV
实心轴
Solid shaft

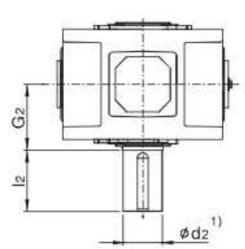

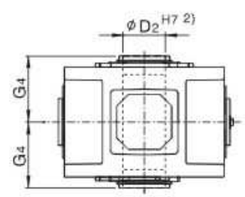

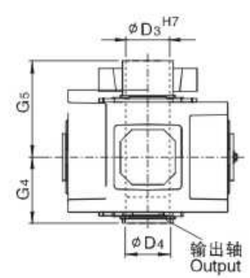

布置形式 A+D 根据用户要求供货
Design A+D on request

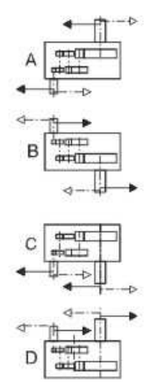

注：1) k6≤Φ50　m6>Φ50
2) 键槽GB/T1095-1979。
3) 扭力支撑位于工作机侧。
4) 有关油泵、油管和护盖的安装空间及确切尺寸，请与我们联系。

Note：1) k6≤Φ50　m6>Φ50
2) Keyway GB/T1095-1979.
3) Torque support on driven machine side
4) Space for pump, pipes and cover, for exact dimension, please refer to us.

平行轴齿轮箱 Helical Gear Units　　四级传动 Four Stage　　立式安装 Vertical

类型H4.V　Types H4.V　　规格13...18　Sizes 13...18

规格 Size	尺寸 mm　Dimensions in mm												
	输入轴 Input												
	iN=100-180		iN=112-200		iN=125-224		iN=200-355		iN=224-400		iN=250-450		G1
	d1 1)	l1	d1 1)	l1	d1 1)	l1	d1 1)	l1	d1 1)	l1	d1 1)	l1	
13	50	110					38	80					305
14					50	110					38	80	305
15	60	140					50	110					345
16			60	140					50	110			345
17	60	140					50	110					380
18			60	140					50	110			380
19						根据用户要求供货 On request							
20													
21													
22													

规格 Size	尺寸 mm　Dimensions in mm																
	齿轮箱 Gear units																
	a	b	c	e7	E	E1	f1	f2	h	h2	m1	m2	n1	n2	p1 4)	p2 4)	s
13	1395	900	61±2	695	820	130	47	35	272.5	300	1300	680	50	360	50	500	48
14	1535	900	61±2	695	890	130	47	35	272.5	300	1440	680	50	430	50	500	48
15	1680	980	72±2	735	987	160	56	42	310	340	1565	750	60	430	50	570	55
16	1770	980	72±2	735	1033	160	56	42	310	340	1655	750	60	475	50	570	55
17	1770	1110	81±2	795	1035	160	53	42	340	374	1640	850	70	465	70	630	55
18	1890	1110	81±2	795	1095	160	53	42	340	374	1760	850	70	525	70	630	55
19								根据用户要求供货 On request									
20																	
21																	
22																	

规格 Size	尺寸 mm　Dimensions in mm									润滑油 Lubrication (L)	重量 Weight (kg)
	输出轴 Output										
	H4SV			H4HV		H4DV					
	d2 1)	G2	l2	D2 2)	G4	D3	D4	G4	G5		
13	200	335	350	190	335	190	195	335	480	95	2270
14	210	335	350	210	335	210	215	335	480	105	2600
15	230	380	410	230	380	230	235	380	550	150	3440
16	240	380	410	240	380	240	245	380	550	160	3740
17	250	415	410	250	415	250	260	415	600	190	4445
18	270	415	470	275	415	280	285	415	600	200	4915
19					根据用户要求供货 On request						
20											
21											
22											

直交轴齿轮箱 Bevel-helical Gear Units　　二级传动 Two Stage　　立式安装 Vertical
类型B2.V　Types B2.V　　规格1...12　Sizes 1...12

B2SV B2HV B2DV
采用浸油润滑 With dip lubrication

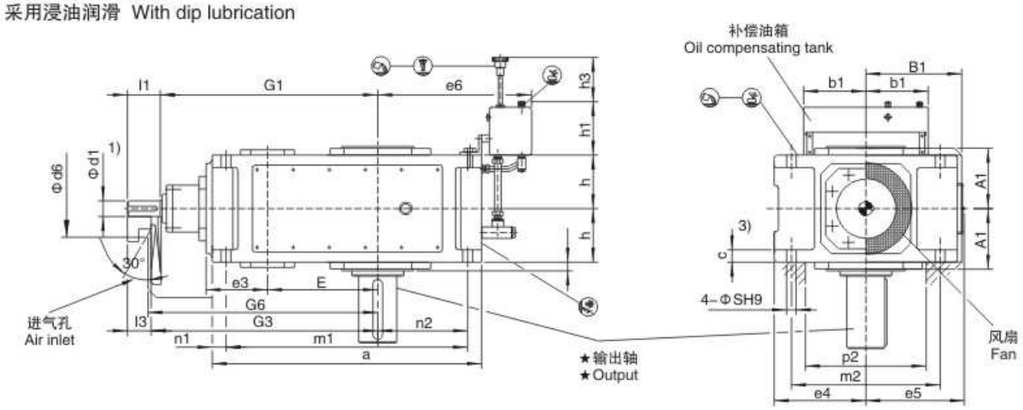

B2SV B2HV B2DV
采用强制润滑 With forced lubrication

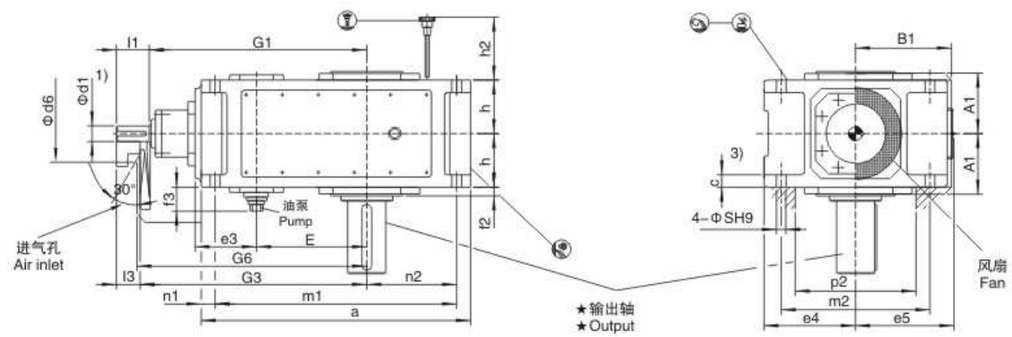

★ 输出轴 Output

B2SV
实心轴
Solid shaft

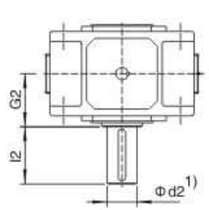

B2HV
空心轴
Hollow shaft

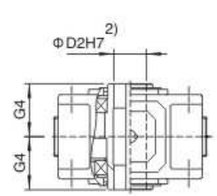

B2DV
带胀紧盘的空心轴
Hollow shaft for shrink disk

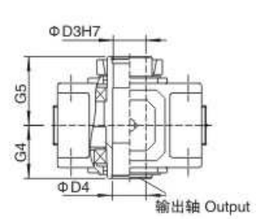

布置形式 A+D 根据用户要求供货
Design A+D on request

布置形式 Design

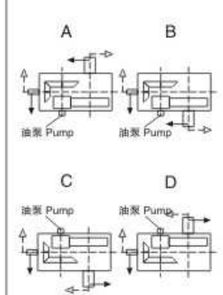

注：1) k6≤Φ50　m6>Φ50
2) 扭力支撑位于工作机侧。
3) 有关油泵、油管和护盖的安装空间及确切尺寸，请与我们联系。

Note：1) k6≤Φ50　m6>Φ50
2) Torque support on driven machine side
3) Space for pump, pipes and cover, for exact dimension, please refer to us.

H/B工业齿轮箱 GEAR UNITS

直交轴齿轮箱 Bevel-helical Gear Units　　二级传动 Two Stage　　立式安装 Vertical
类型B2.V　Types B2.V　　规格1...12　Sizes 1...12

规格 Size	尺寸 mm Dimensions in mm										
	输入轴 Input										
	iN=5-11.2			iN=6.3-14			iN=12.5-18			G1	G3
	d1[1]	l1	l3	d1[1]	l1	l3	d1[1]	l1	l3		
1	28	55	40				20	50	35	300	315
2	30	70	50				25	60	40	340	360
3	45	100	60				35	80	40	390	410
4	50	100	80							465	485
5	60	110	80							535	565
6				60	110	80				570	600
7	75	135	105							640	670
8				75	135	105				685	715
9	85	165	130							755	790
10				85	165	130				805	840
11	95	165	130							925	960
12				95	165	130				995	1030

规格 Size	尺寸 mm Dimensions in mm											
	齿轮箱 Gear units											
	a	A1	b1	B1	c	d6	e3	e4	e5	e6	E	f2
1	305	128	150	130	16±1	100	90	130	145	280	90	22
2	355	143	150	145	20±1	110	110	145	160	285	110	22
3	405	163	150	170	24±1	120	130	175	185	290	130	24
4	505	188	150	200	30±1	150	160	200	215	320	160	26
5	565	215	240	235	30±1	160	185	230	252	385	185	30
6	645	215	240	235	30±1	160	185	230	252	425	220	30
7	690	250	240	285	36±1	210	225	280	302	425	225	32
8	795	250	240	285	36±1	210	225	280	302	485	270	32
9	820	270	330	325	48±1.5	195	265	320	342	560	265	45
10	920	270	330	325	48±1.5	195	265	320	342	610	315	45
11	975	328	330	385	54±1.5	210	320	380	410	595	320	47
12	1130	328	330	385	54±1.5	210	320	380	410	680	390	47

规格 Size	尺寸 mm Dimensions in mm											
	齿轮箱 Gear units											
	f3	G6	h	h1	h2	h3	m1	m2	n1	n2	p2[4]	s
1	–	325	90	165	–	170	275	210	15	115	150	12
2	–	370	102.5	165	–	170	315	315	20	120	170	14
3	–	420	112.5	165	–	180	365	365	20	130	200	18
4	–	495	135	165	–	180	445	300	30	160	220	24
5	190	575	160	205	245	240	505	360	30	175	270	24
6	190	610	160	205	245	240	585	360	30	220	270	24
7	200	685	190	205	220	250	620	430	35	215	330	28
8	200	730	190	205	220	250	725	430	35	275	330	28
9	200	805	220	275	250	330	740	490	40	260	370	36
10	200	855	220	275	250	330	840	490	40	310	370	36
11	200	980	265	275	300	340	875	600	50	295	440	40
12	200	1050	265	275	300	340	1030	600	50	380	440	40

规格 Size	尺寸 mm Dimensions in mm									润滑油 Lubrication		重量 Weight (kg)
	输出轴 Output									浸油润滑 Dip lubrication (L)	强制润滑 Forced lubrication (L)	
	B2SV			B2HV		B2DV						
	d2[1]	G2	l2	D2[2]	G4	D3	D4	G4	G5			
1	45	120	80	–	–	–	–	–	–	7	–	65
2	55	135	110	55	135	60	60	135	180	11	–	90
3	65	145	140	65	145	70	70	145	200	16	–	140
4	80	170	170	80	170	85	85	170	235	28	–	235
5	100	200	210	95	200	100	100	200	275	41	20	360
6	110	200	210	105	200	110	110	200	275	50	23	410
7	120	235	210	115	235	120	120	235	320	75	35	615
8	130	235	250	125	235	130	130	235	325	90	38	700
9	140	270	250	135	270	140	145	270	360	115	53	1000
10	160	270	300	150	270	150	155	270	385	135	60	1155
11	170	320	300	165	320	165	170	320	450	190	86	1640
12	180	320	300	180	320	180	185	320	455	215	95	1910

直交轴齿轮箱 Bevel-helical Gear Units　　二级传动 Two Stage　　立式安装 Vertical
类型B2.V　Types B2.V　　规格13...18　Sizes 13...18

B2SV B2HV B2DV
采用强制润滑 With forced lubrication

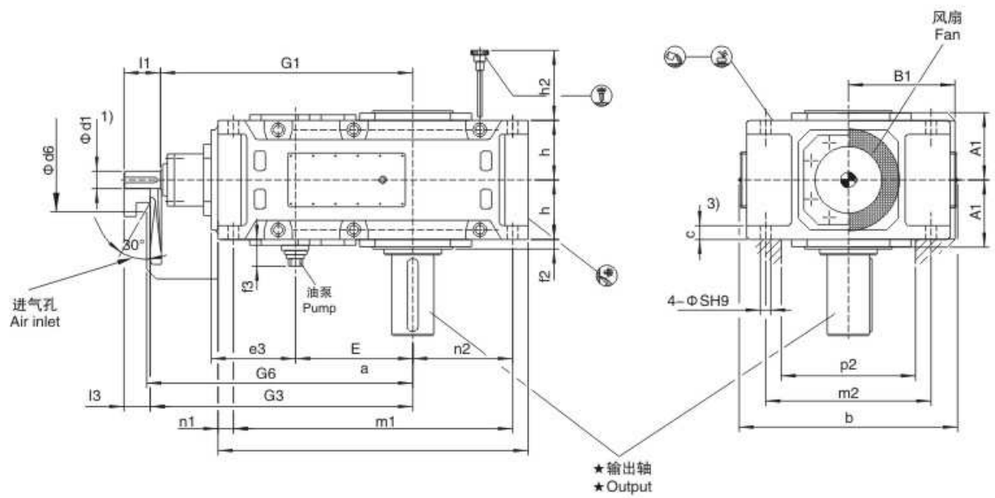

★ 输出轴 Output

B2SV
实心轴
Solid shaft

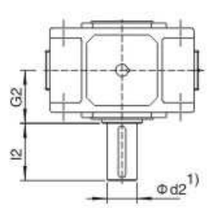

B2HV
空心轴
Hollow shaft

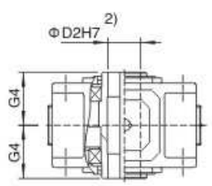

B2DV
带胀紧盘的空心轴
Hollow shaft for shrink disk

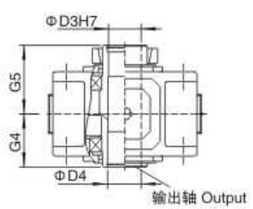

布置形式 A+D 根据用户要求供货
Design A+D on request

布置形式 Design

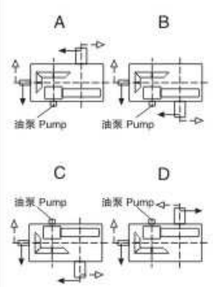

注：1) k6≤Φ50 m6>Φ50
2) 扭力支撑位于工作机侧。
3) 有关油泵、油管和护盖的安装空间及确切尺寸，请与我们联系。

Note：1) k6≤Φ50 m6>Φ50.
2) Torque support on driven machine side
3) Space for pump, pipes and cover, for exact dimension, please refer to us.

直交轴齿轮箱 Bevel-helical Gear Units　　二级传动 Two Stage　　立式安装 Vertical
类型B2.V　Types B2.V　　规格13...18　Sizes 13...18

规格 Size	尺寸 mm Dimensions in mm																
	输入轴 Input																
	iN=5-11.2			iN=5.6-11.2			iN=5.6-12.5			iN=6.3-14			iN=7.1-12.5			G1	G3
	d1[1]	l1	l3	d1[1]	l1	l3	d1[1]	l1	l3	d1[1]	l1	l3	d1[1]	l1	l3		
13	115	205	165													1070	1110
14										115	205	165				1140	1180
15	140	245	200													1277	1322
16							140	245	200							1323	1368
17				150	245	200										1435	1480
18													150	245	200	1495	1540

规格 Size	尺寸 mm Dimensions in mm									
	齿轮箱 Gear units									
	a	A1	b	B1	c	d6	e3	E	f2	f3
13	1130	375	900	450	61±2	245	380	370	38	200
14	1270	375	900	450	61±2	245	380	440	45	200
15	1350	435	980	495	72±2	280	450	442	75	200
16	1440	435	980	495	72±2	280	450	488	75	200
17	1490	505	1110	555	81±2	380	510	490	98	200
18	1610	505	1110	555	81±2	380	510	550	98	200

规格 Size	尺寸 mm Dimensions in mm								
	齿轮箱 Gear units								
	G6	h	h2	m1	m2	n1	n2	p2[4]	s
13	1130	325	350	1035	680	50	360	500	48
14	1200	325	350	1175	680	50	430	500	48
15	1340	380	430	1235	750	60	430	570	55
16	1385	380	430	1325	750	60	475	570	55
17	1500	437.5	480	1360	840	70	465	630	65
18	1560	437.5	480	1480	840	70	525	630	65

规格 Size	尺寸 mm Dimensions in mm									润滑油 Lubrication (L)	重量 Weight (kg)
	输出轴 Output										
	B2SV			B2HV		B2DV					
	d2[1]	G2	l2	D2[2]	G4	D3	D4	G4	G5		
13	200	390	350	–	–	–	–	–	–	100	2350
14	210	390	350	210	390	210	215	390	535	110	2725
15	230	460	410	–	–	–	–	–	–	145	3795
16	240	460	410	240	450	240	245	450	620	160	4160
17	250	540	410	–	–	–	–	–	–	210	5320
18	270	540	470	275	510	280	285	510	700	220	5860

直交轴齿轮箱 Bevel–helical Gear Units　三级传动 Three Stage　立式安装 Vertical
类型B3.V　Types B3.V　规格3...12　Sizes 3...12

B3SV B3HV B3DV
采用浸油润滑 With dip lubrication

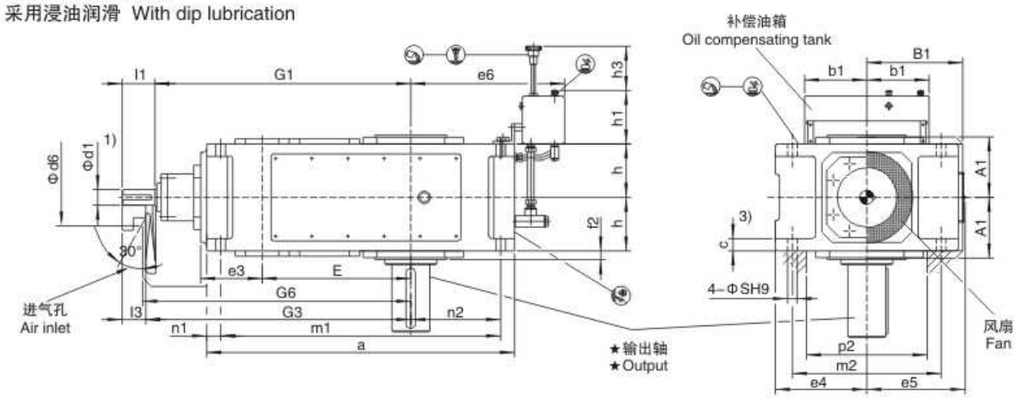

B3SV B3HV B3DV
采用强制润滑 With forced lubrication

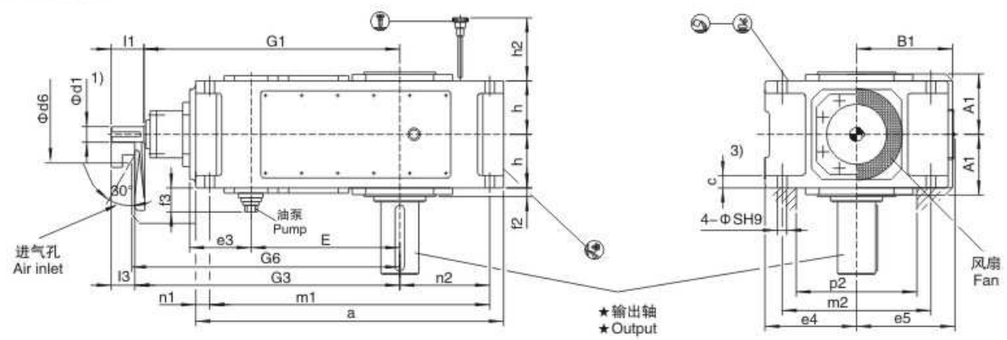

★ 输出轴 Output

B3SV
实心轴
Solid shaft

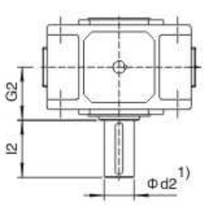

B3HV
空心轴
Hollow shaft

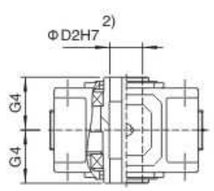

B3DV
带胀紧盘的空心轴
Hollow shaft for shrink disk

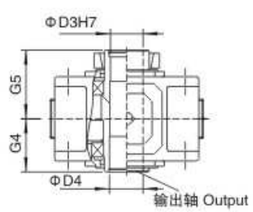

布置形式 A+D 根据用户要求供货
Design A+D on request

布置形式 Design

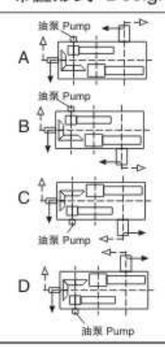

注：1) k6≤Φ50 m6>Φ50
2) 扭力支撑位于工作机侧。
3) 有关油泵、油管和护盖的安装空间及确切尺寸，请与我们联系。

Note：1) k6≤Φ50 m6>Φ50
2) Torque support on driven machine side
3) Space for pump, pipes and cover, for exact dimension, please refer to us.

直交轴齿轮箱 Bevel–helical Gear Units　三级传动 Three Stage　立式安装 Vertical
类型B3.V　Types B3.V　规格3...12　Sizes 3...12

规格 Size	尺寸 mm Dimensions in mm																
	输入轴 Input																
	iN=12.5–45			iN=16–56			iN=20–45			iN=50–71			iN=63–90			G1	G3
	d1[1]	l1	l3	d1[1]	l1	l3	d1[1]	l1	l3	d1[1]	l1	l3	d1[1]	l1	l3		
3							35	80	60	25	50	30				430	450
4	35	80	60							30	60	40				500	530
5	45	110	80							35	80	50				575	605
6				45	110	80							35	80	50	610	640
7	50	110	90							40	80	60				690	710
8				50	110	90							40	80	60	735	755
9	60	140	110							50	110	80				800	830
10				60	140	110							50	110	80	850	880
11	75	140	110							60	140	110				965	995
12				75	140	110							60	140	110	1035	1065

规格 Size	尺寸 mm Dimensions in mm											
	齿轮箱 Gear units											
	a	A1	b1	B1	c	d6	e3	e4	e5	e6	E	f2
3	450	128	150	170	24 ± 1	90	90	175	185	290	220	20
4	565	143	150	200	30 ± 1	110	110	200	215	320	270	22
5	640	168	240	235	30 ± 1	130	130	230	252	385	315	28
6	720	168	240	235	30 ± 1	130	130	230	252	425	350	28
7	785	193	240	275	36 ± 1	165	160	280	292	425	385	30
8	890	193	240	275	36 ± 1	165	160	280	302	485	430	32
9	925	231	330	325	45 ± 1.5	175	185	320	342	560	450	32
10	1025	231	330	325	45 ± 1.5	175	185	320	342	610	500	32
11	1105	263	330	385	54 ± 1.5	190	225	380	402	595	545	35
12	1260	263	330	385	54 ± 1.5	190	225	380	410	680	615	35

规格 Size	尺寸 mm Dimensions in mm											
	齿轮箱 Gear units											
	f3	G6	h	h1	h2	h3	m1	m2	n1	n2	p2[4]	s
3	–	455	95	165	–	180	410	265	20	125	210	18
4	–	530	107.5	165	–	180	505	300	30	160	220	24
5	190	605	127.5	205	180	240	580	360	30	175	270	24
6	190	640	127.5	205	180	240	660	360	30	220	270	24
7	190	720	150	205	165	250	715	430	35	215	330	28
8	190	765	150	205	165	250	820	430	35	275	330	28
9	180	845	185	275	205	330	845	490	40	260	370	36
10	180	895	185	275	205	330	945	490	40	310	370	36
11	180	1010	215	275	240	340	1005	600	50	295	440	40
12	180	1080	215	275	240	340	1160	600	50	380	440	40

规格 Size	尺寸 mm Dimensions in mm									润滑油 Lubrication		重量 Weight (kg)
	输出轴 Output									浸油润滑 Dip lubrication (L)	强制润滑 Forced lubrication (L)	
	B3SV			B3HV		B3DV						
	d2[1]	G2	l2	D2[2]	G4	D3	D4	G4	G5			
3	65	125	140	65	125	70	70	125	180	15	–	130
4	80	140	170	80	140	85	85	140	205	28	–	210
5	100	165	210	95	165	100	100	165	240	32	12	325
6	110	165	210	105	165	110	110	165	240	35	13	380
7	120	195	210	115	195	120	120	195	280	52	22	550
8	130	195	250	125	195	130	130	195	285	67	28	635
9	140	235	250	135	235	140	145	235	330	115	48	890
10	160	235	300	150	235	150	155	235	350	125	52	1020
11	170	270	300	165	270	165	170	270	400	180	75	1455
12	180	270	300	180	270	180	185	270	405	200	85	1730

直交轴齿轮箱 Bevel–helical Gear Units　三级传动 Three Stage　立式安装 Vertical
类型B3.V　Types B3.V　规格13...18　Sizes 13...18

B3SV B3HV B3DV
采用强制润滑 With forced lubrication

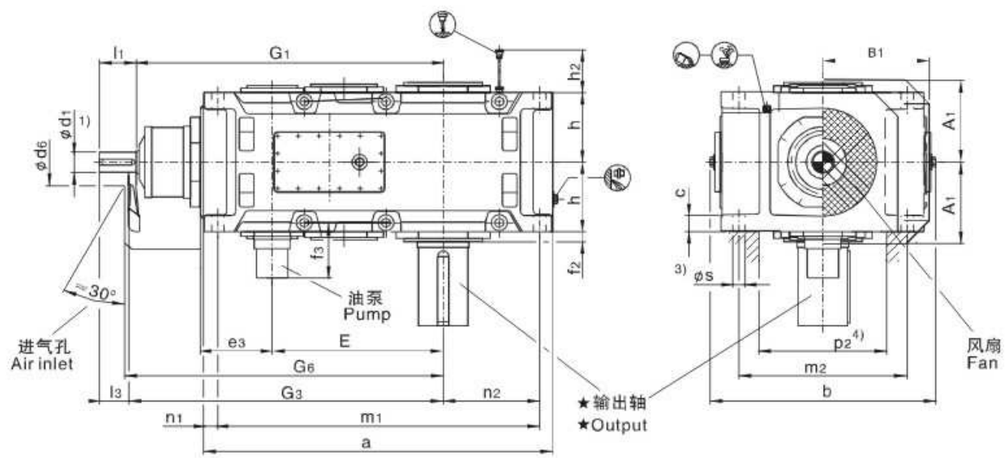

★ 输出轴 Output

B3SV
实心轴
Solid shaft

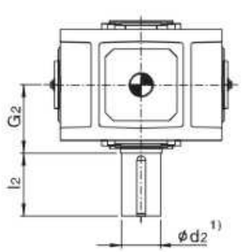

B3HV
空心轴
Hollow shaft

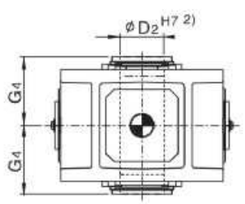

B3DV
带胀紧盘的空心轴
Hollow shaft for shrink disk

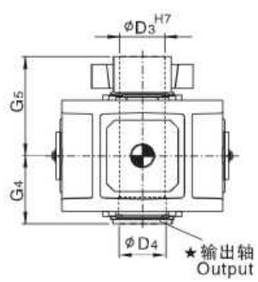

布置形式 A+D 根据用户要求供货
Design A+D on request

布置形式 Design

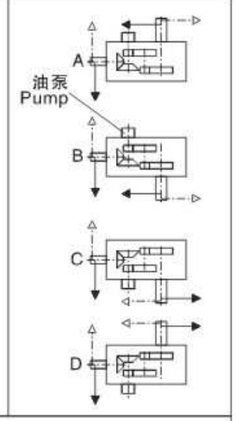

注：1) k6≤Φ50 m6>Φ50
2) 键槽GB/T1095–1979。
3) 扭力支撑位于工作机侧。
4) 有关油泵、油管和护盖的安装空间及确切尺寸，请与我们联系。

Note：1) k6≤Φ50 m6>Φ50
2) Keyway GB/T1095–1979.
3) Torque support on driven machine side
4) Space for pump, pipes and cover, for exact dimension, please refer to us.

H/B工业齿轮箱 GEAR UNITS

直交轴齿轮箱 Bevel–helical Gear Units　三级传动 Three Stage　立式安装 Vertical
类型B3.V　Types B3.V　规格13...18　Sizes 13...18

规格 Size	尺寸 mm Dimensions in mm																			
	输入轴 Input																			
	iN=12.5–45			iN=14–50			iN=16–56			iN=50–71			iN=56–80			iN=63–90			G1	G3
	d1 1)	l1	l3	d1 1)	l1	l3	d1 1)	l1	l3	d1 1)	l1	l3	d1 1)	l1	l3	d1 1)	l1	l3		
13	85	165	130							70	140	105							1125	1160
14							85	165	130							70	140	105	1195	1230
15	95	165	130							75	140	105							1367	1402
16				95	165	130							75	140	105				1413	1448
17	115	205	165							90	170	130							1560	1600
18				115	205	165							90	170	130				1620	1660
19										根据用户要求供货 On request										
20																				
21																				
22																				

规格 Size	尺寸 mm Dimensions in mm									
	齿轮箱 Gear units									
	a	A1	b	B1	c	d6	e3	E	f2	f3
13	1290	325	900	475	61±2	210	265	635	35	170
14	1430	325	900	475	61±2	210	265	705	35	170
15	1550	365	980	520	72±2	210	320	762	42	170
16	1640	365	980	520	72±2	210	320	808	42	170
17	1740	395	1110	570	81±2	230	370	860	42	170
18	1860	395	1110	570	81±2	230	370	920	42	170
19					根据用户要求供货 On request					
20										
21										
22										

规格 Size	尺寸 mm Dimensions in mm								
	齿轮箱 Gear units								
	G6	h	h2	m1	m2	n1	n2	p2 4)	s
13	1180	272.5	300	1195	680	50	360	500	48
14	1250	272.5	300	1335	680	50	430	500	48
15	1420	310	340	1435	750	60	430	570	55
16	1470	310	340	1525	750	60	475	570	55
17	1620	340	380	1610	850	70	465	630	55
18	1680	340	380	1730	850	70	525	630	55
19				根据用户要求供货 On request					
20									
21									
22									

规格 Size	尺寸 mm Dimensions in mm									润滑油 Lubrication (L)	重量 Weight (kg)
	输出轴 Output										
	B3SV			B3HV		B3DV					
	d2 1)	G2	l2	D2 2)	G4	D3	D4	G4	G5		
13	200	335	350	190	335	190	195	335	480	95	2260
14	210	335	350	210	335	210	215	335	480	110	2615
15	230	380	410	230	380	230	235	380	550	165	3540
16	240	380	410	240	380	240	245	380	550	190	3765
17	250	415	410	250	415	250	260	415	600	210	4760
18	270	415	470	275	415	280	285	415	600	240	5240
19						根据用户要求供货 On request					
20											
21											
22											

直交轴齿轮箱 Bevel–helical Gear Units　四级传动 Four Stage　立式安装 Vertical
类型B4.V　Types B4.V　规格5...12　Sizes 5...12

B4SV B4HV B4DV
采用浸油润滑 With dip lubrication

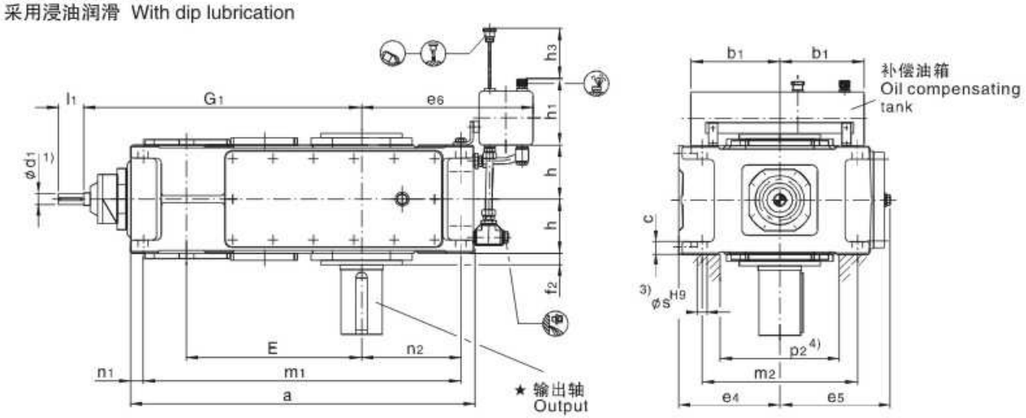

B4SV B4HV B4DV
采用强制润滑 With forced lubrication

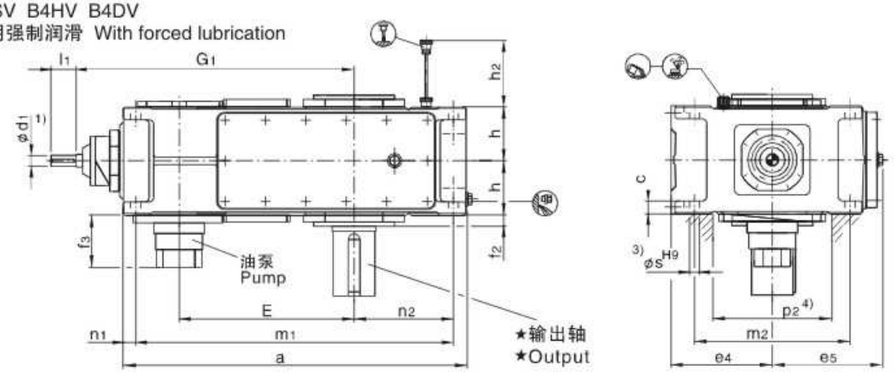

★ 输出轴 Output　　布置形式 Design

B4SV
实心轴
Solid shaft

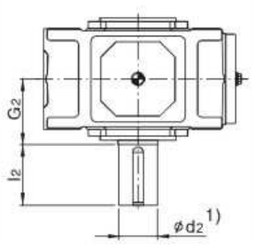

B4HV
空心轴
Hollow shaft

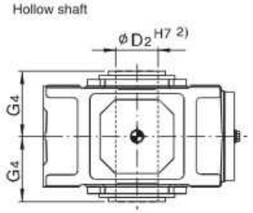

B4DV
带胀紧盘的空心轴
Hollow shaft for shrink disk

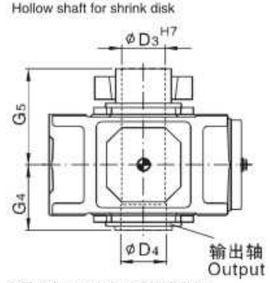

布置形式 A+D 根据用户要求供货
Design A+D on request

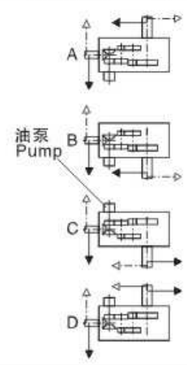

注：1) k6≤Φ50 m6>Φ50
2) 键槽GB/T1095–1979。
3) 扭力支撑位于工作机侧。
4) 有关油泵、油管和护盖的安装空间及确切尺寸，请与我们联系。

Note：1) k6≤Φ50 m6>Φ50
2) Keyway GB/T1095–1979.
3) Torque support on driven machine side
4) Space for pump, pipes and cover, for exact dimension, please refer to us.

直交轴齿轮箱 Bevel–helical Gear Units　四级传动 Four Stage　立式安装 Vertical
类型B4.V　Types B4.V　规格5...12　Sizes 5...12

规格 Size	尺寸 mm Dimensions in mm								
	输入轴 Input								
	iN=80–180		iN=100–224		iN=200–315		iN=250–400		G1
	d1 1)	l1	d1 1)	l1	d1 1)	l1	d1 1)	l1	
5	35	80			25	50			615
6			35	55			25	50	650
7	35	80			30	60			725
8			35	80			30	60	770
9	45	110			35	80			840
10			45	110			35	80	890
11	50	110			40	80			1010
12			50	110			40	80	1080

规格 Size	尺寸 mm Dimensions in mm								
	齿轮箱 Gear units								
	a	b1	c	e4	e5	e6	E	f2	f3
5	690	240	30±1	230	252	385	405	28	200
6	770	240	30±1	230	252	425	440	28	200
7	845	240	36±1	280	292	425	495	30	120
8	950	240	36±1	280	302	485	540	32	120
9	1000	330	45±1.5	320	342	560	580	32	120
10	1100	330	45±1.5	320	342	610	630	32	120
11	1200	330	54±1.5	380	402	595	705	35	130
12	1355	330	54±1.5	380	410	680	775	35	130

规格 Size	尺寸 mm Dimensions in mm									
	齿轮箱 Gear units									
	h	h1	h2	h3	m1	m2	n1	n2	p2 4)	s
5	127.5	205	190	240	630	360	30	175	270	24
6	127.5	205	190	240	710	360	30	220	270	24
7	150	205	165	250	775	430	35	215	330	28
8	150	205	165	250	880	430	35	275	330	28
9	185	275	205	330	920	490	40	260	370	36
10	185	275	205	330	1020	490	40	310	370	36
11	215	275	240	340	1100	600	50	295	440	40
12	215	275	240	340	1255	600	50	380	440	40

规格 Size	尺寸 mm Dimensions in mm									润滑油 Lubrication		重量 Weight (kg)
	输出轴 Output									浸油润滑 Dip lubrication (L)	强制润滑 Forced lubrication (L)	
	B4SV			B4HV		B4DV						
	d2 1)	G2	l2	D2 2)	G4	D3	D4	G4	G5			
5	100	165	210	95	165	100	100	165	240	36	15	335
6	110	165	210	105	165	110	110	165	240	40	16	385
7	120	195	210	115	195	120	120	195	280	60	30	555
8	130	195	250	125	195	130	130	195	285	70	35	655
9	140	235	250	135	235	140	145	235	330	110	60	890
10	160	235	300	150	235	150	155	235	350	130	67	1025
11	170	270	300	165	270	165	170	270	400	180	75	1485
12	180	270	300	180	270	180	185	270	405	195	85	1750

直交轴齿轮箱 Bevel–helical Gear Units　四级传动 Four Stage　立式安装 Vertical
类型B4.V　Types B4.V　规格13...18　Sizes 13...18

B4SV B4HV B4DV
采用浸油润滑 With dip lubrication

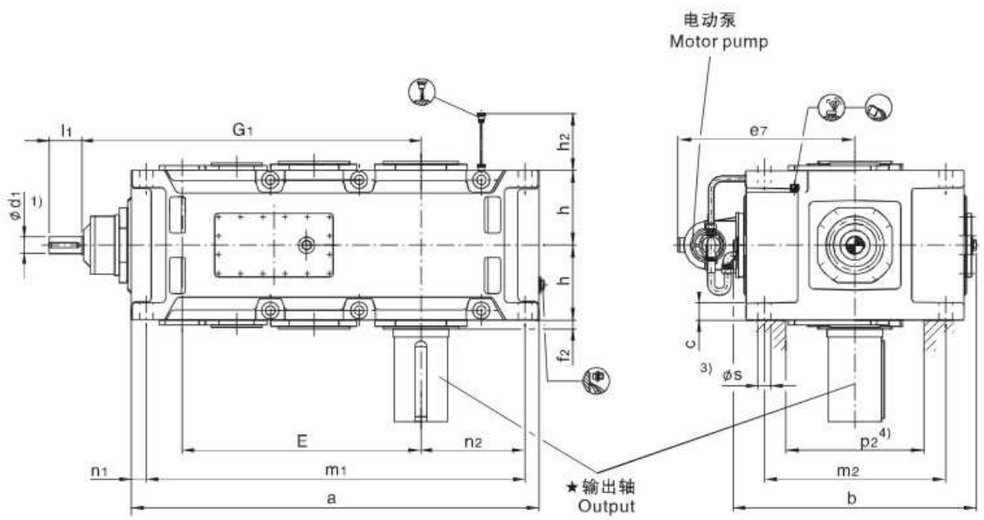

★ 输出轴 Output

B4SV
实心轴
Solid shaft

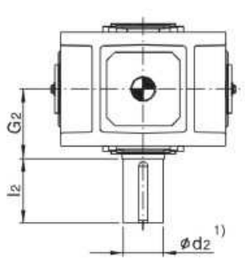

B4HV
空心轴
Hollow shaft

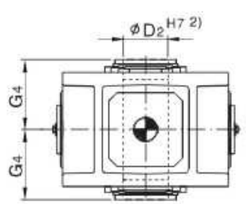

B4DV
带胀紧盘的空心轴
Hollow shaft for shrink disk

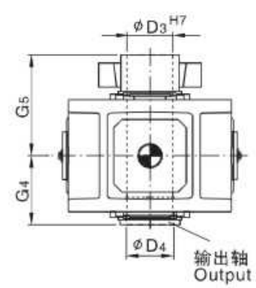

布置形式 A+D 根据用户要求供货
Design A+D on request

布置形式 Design

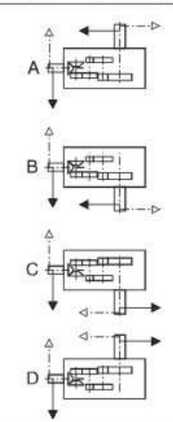

注：1) k6≤Φ50 m6>Φ50
2) 键槽GB/T1095–1979。
3) 扭力支撑位于工作机侧。
4) 有关油泵、油管和护盖的安装空间及确切尺寸，请与我们联系。

Note：1) k6≤Φ50 m6>Φ50
2) Keyway GB/T1095–1979.
3) Torque support on driven machine side
4) Space for pump, pipes and cover, for exact dimension, please refer to us.

直交轴齿轮箱 Bevel–helical Gear Units　四级传动 Four Stage　立式安装 Vertical
类型B4.V　Types B4.V　规格13...18　Sizes 13...18

规格 Size	尺寸 mm Dimensions in mm												
	输入轴 Input												
	iN=80–180		iN=90–200		iN=100–224		iN=200–315		iN=224–355		iN=250–400		G1
	d1 1)	l1	d1 1)	l1	d1 1)	l1	d1 1)	l1	d1 1)	l1	d1 1)	l1	
13	60	110					50	100					1170
14					60	110					50	100	1240
15	75	135					60	110					1402
16			75	135					60	110			1448
17	75	135					60	110					1450
18			75	135					60	110			1510
19						根据用户要求供货 On request							
20													
21													
22													

规格 Size	尺寸 mm Dimensions in mm													
	齿轮箱 Gear units													
	a	b	c	e7	E	f2	h	h2	m1	m2	n1	n2	p2 4)	s
13	1395	900	61±2	695	820	35	272.5	300	1300	680	50	360	500	48
14	1535	900	61±2	695	890	35	272.5	300	1440	680	50	430	500	48
15	1680	980	72±2	735	987	42	310	340	1565	750	60	430	570	55
16	1770	980	72±2	735	1033	42	310	340	1655	750	60	475	570	55
17	1770	1110	81±2	795	1035	42	340	374	1640	850	70	465	630	55
18	1890	1110	81±2	795	1095	42	340	374	1760	850	70	525	630	55
19							根据用户要求供货 On request							
20														
21														
22														

规格 Size	尺寸 mm Dimensions in mm									润滑油 Lubrication (L)	重量 Weight (kg)
	输出轴 Output										
	B4SV			B4HV		B4DV					
	d2 1)	G2	l2	D2 2)	G4	D3	D4	G4	G5		
13	200	335	350	190	335	190	195	335	480	130	2280
14	210	335	350	210	335	210	215	335	480	150	2605
15	230	380	410	230	380	230	235	380	550	200	3435
16	240	380	410	240	380	240	245	380	550	235	3765
17	250	415	410	250	415	250	260	415	600	215	4460
18	270	415	470	275	415	280	285	415	600	250	4930
19						根据用户要求供货 On request					
20											
21											
22											

齿轮箱 Gear Units
直交轴带辅助传动齿轮箱选型图表
Bevel–helical with assistant drive gear units for map–table of choice

B3.FSH B3.FHH B3.FDH

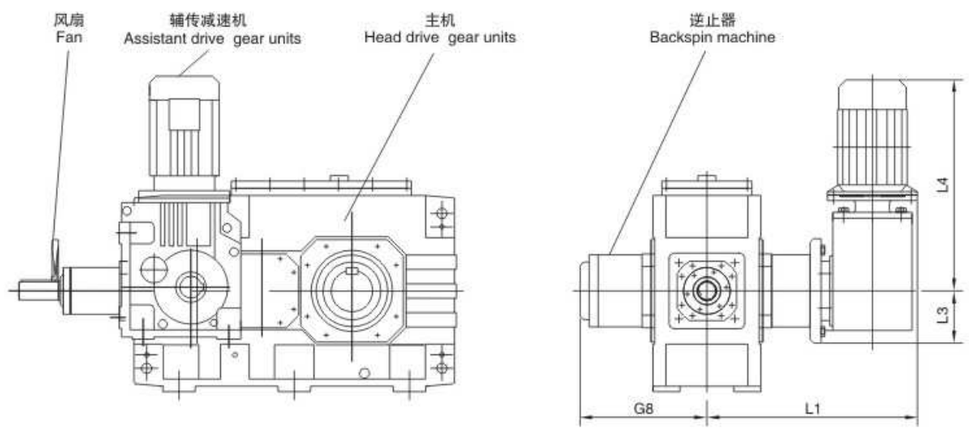

辅助传动减速机参数 Assistant drive gear units parameter						外形尺寸 Out dimensions				
型号 Type	输入转速 Input speed (r/min)	输出转速 Out speed (r/min)	输出转矩 Out troque (kNm)	辅助传动减速机型号 Assistant drive gear units type	电机 Motor (kw)	G8	L1	L3	L4	重量 Weight (kg)
4	1450	3.1	3.2	KF67–90S–4P	1.1	275	470	125	435	280
5	1450	3.1	3.2	KF67–90S–4P	1.1	295	490	125	435	395
6	1450	2.5	4.0	KF67–90S–4P	1.1	295	490	125	435	450
7	1450	3.1	6.3	KF77–100L1–4P	2.2	356	600	125	583	663
8	1450	2.5	7.9	KF77–100L1–4P	2.2	356	600	125	583	748
9	1450	2.3	11.8	KF87–100L2–4P	3	388	700	175	680	1050
10	1450	1.8	14.8	KF87–100L2–4P	3	388	700	175	680	1180
11	1450	2.3	11.6	KF87–100L2–4P	3	438	700	175	680	1615
12	1450	1.8	14.7	KF87–100L2–4P	3	438	700	175	680	1890

布置形式 Design

A1 B3.FSH

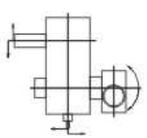

A2 B3.FHH

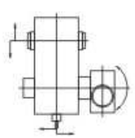

A3 B3.FDH

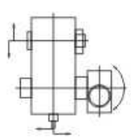

B1 B3.FSH

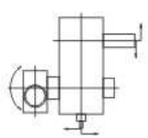

B2 B3.FHH

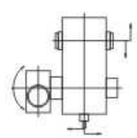

B3 B3.FDH

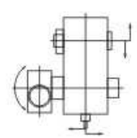

B3SH

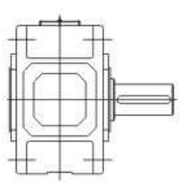

B3HH

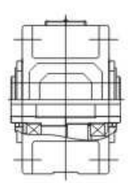

B3DH

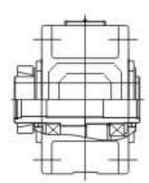

注：B3.F…中的F–带辅助传动

Note：B3.F…middle F–with assistant drive

齿轮箱 Gear Units
C型轴端中心孔，符合GB145–1985标准
Centre holes, form cin shaft ends GB145–1985

C型中心孔 From C
锥孔，带一段直孔和护锥沉孔 Tapped hole, with straight running face and counterbore

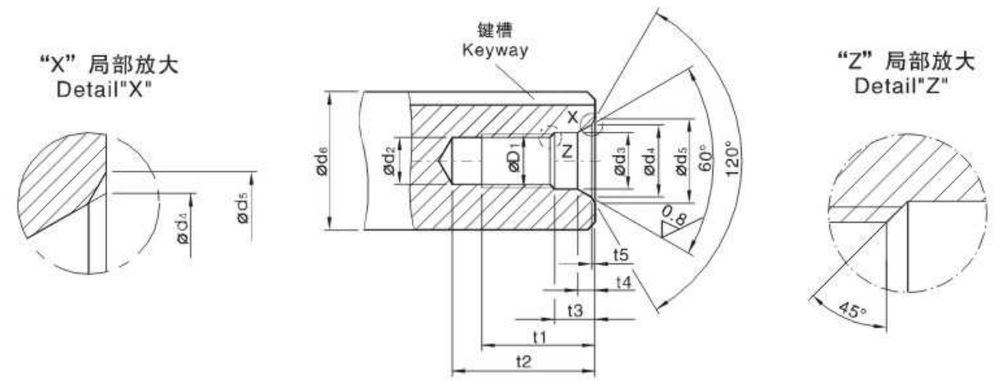

推荐尺寸 Recommended diameters d6[1]		C型 Fromc											
大于 above	至 to	C中心孔 C_ Centering	d1	d2	d3	d4	d5	t1	t2		t3	t4	t5
								+2	min.	max.	+1	≈	≈
mm			mm										
16	21	C 6	M6	5	6.4	9.6	10.5	16	20	22	5	2.8	0.4
21	24	C 8	M8	6.8	8.4	12.2	13.2	19	25	28	6	3.3	0.4
24	30	C 10	M10	8.5	10.5	14.9	16.3	22	30	34	7.5	3.8	0.6
30	38	C 12	M12	10.2	13	18.1	19.8	28	37	42	9.5	4.4	0.7
38	50	C 16	M16	14	17	23	25.3	36	45	50	12	5.2	1
50	85	C 20	M20	17.5	21	28.4	31.3	42	53	59	15	6.4	1.3
85	130	C 24	M24	21	25	34.2	38	50	63	68	18	8	1.6
130*	225*	C 30	M30*	26.5	31	44	48	60	77	83	17	11	1.9
225*	320*	C 36	M36*	32	37	55	60	74	93	99	22	15	2.3
220*	500*	C 42	M42*	37.5	43	65	71	84	105	111	26	19	2.7

1）工件加工后最终尺寸
*）不是根据GB145–1985确定的尺寸

1）Diameter of the finished work piece
*）Dimensions not acc. to GB145–1985

齿轮箱 Gear Units
平键和键槽 Parallel keys keyways

选择ISO配合精度 Selection of ISO fits

选择 ISO 配合精度 Selection of ISO fits				
选择 ISO 配合精度 Selection of ISO fits	轴 Shaft d		轴公差 Shaft tolerance	孔公差 Bore tolerance
	大于 Above mm	至 To mm		
轴公差根据公司标准确定 Shaft tolerance acc. To company standard		50	k6	H7
	50		m6	

对于重载工件条件，如带载反向回转，建议采用比较紧密的配合，轮毂键槽宽度亦应选择ISO P9公差级别。
For heavy-duty operating conditions, e.g. reversing under load, it is recommended that a tighter fit and for the hub keyway width the ISO P9 tolerance is selected.

平键 parallel keys

平键紧固方式，采用无锥度联接。
Drive type fastening without taper action

平键和键槽根据GB / T1095-1979标准确
Parallel key and keyway acc. to GB/T1095-1979

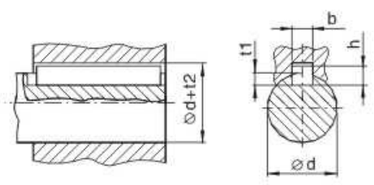

1) 重载工作条件下轮毂平键键槽宽度b的公差带应按ISO JS9或ISO P9确定。
1) The tolerance zone for the hub keyway width b for parallel keys is ISO JS9,or ISO P9 for heavy-duty operating conditions.

直径 Diameter d		宽度 1) Width1) b 1) mm	高度 Height h mm	轴键槽深度 Depth of key-way inshaft t1 mm	轮毂槽深度 Depth of key-way inhub d+t2 GB/T1095-1979 mm
大于 Above mm	至 To mm				
17	22	6	6	3.5	d+2.8
22	30	8	7	4	d+3.3
30	38	10	8	5	d+3.3
38	44	12	8	5	d+3.3
44	50	14	9	5.5	d+3.8
50	58	16	10	6	d+4.3
58	65	18	11	7	d+4.4
65	75	20	12	7.5	d+4.9
75	85	22	14	9	d+5.4
85	95	25	14	9	d+5.4
95	110	28	16	10	d+6.4
110	130	32	18	11	d+7.4
130	150	36	20	12	d+8.4
150	170	40	22	13	d+9.4
170	200	45	25	15	d+10.4
200	230	50	28	17	d+11.4
230	260	56	32	20	d+12.4
260	290	63	32	20	d+12.4
290	330	70	36	22	d+14.4
330	380	80	40	25	d+15.4
380	440	90	45	28	d+17.4

齿轮箱 Gear Units　　带胀紧盘联接的空心轴 Hollow Shaft For Shrink Disk
类型H2,H3,H4,B3,B4 Type H2,H3,H4,B3,B4　　规格3...22 Sizes 3...22

X=要求预留的力矩扳手空间
X=Space required for torque wrench

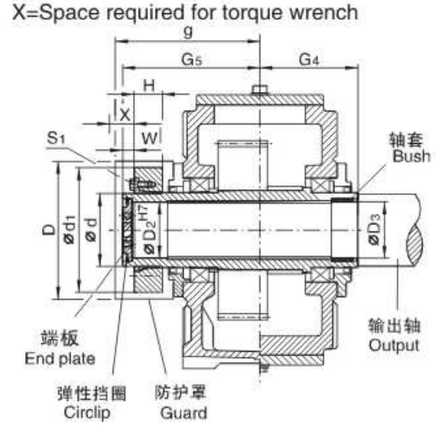

用于胀紧盘联接的工作机驱动轴。
工作机表面不得沾有机油或润滑脂。
Driven machine shaft for shrink disk connection. Driven machine shaft must be free of oil or grease.

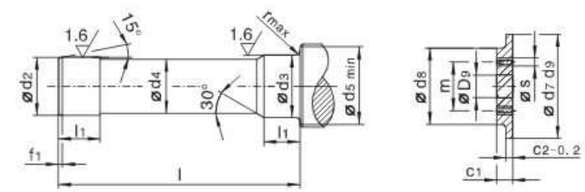

工作驱动轴的C型中孔(通孔)由GBl45—1985确定。
Driven machine shaft with centre hole form C (tapped hole) acc. to GB145-1985

类型H2, H3, H4, B3, B4 Type H2, H3, H4, B3, B4

齿轮箱规格 Gear units size	工作机驱动轴[1] Driven machine shaft								端板 End plate								弹性挡圈 Ring Circlip	空心轴 Hollow shaft				胀紧盘[1] Shrink disk					螺钉 Screw
	d_2	d_3	d_4	d_5	f_1	l	l_1	r	c_1	c_2	d_7	d_8	D_9	m	s	数量 Qty.	GB89/ 3.2-86	D_2	D_3	G_4	G_5	类型	d	d_1	H	W	S_1
	mm																	mm									
3	70 g_6	70 g_6	69.5	80	4	286	38	2	17	7	75	55	22	40	M8	2	75×2.5	70	70	125	180	90-32	90	155	38	20	M10
4	85 g_6	85 h_6	84.5	95	4	326	48	2	17	7	90	70	22	50	M8	2	90×3	85	85	140	205	110-32	110	185	49	20	M12
5	100 g_6	100h_6	99.5	114	4	383	53	2	20	8	105	80	26	55	M10	2	105×4	100	100	165	240	125-32	125	215	53	20	M12
6	110 g_6	110h_6	109.5	124	5	383	58	3	20	8	115	85	26	60	M10	2	115×4	110	110	165	240	140-32	140	230	58	20	M14
7	120 g_6	120h_6	119.5	134	5	453	68	3	20	8	125	90	26	65	M12	2	125×4	120	120	195	280	155-32	155	263	62	23	M14
8	130 g_6	130h_6	129.5	145	5	458	73	3	20	8	135	100	26	70	M12	2	135×4	130	130	195	285	165-32	165	290	68	23	M16
9	140 g_6	145m_6	139.5	160	6	539	82	4	23	10	150	110	33	80	M12	2	150×4	140	145	235	330	175-32	175	300	68	28	M16
10	150 g_6	155m_6	149.5	170	6	559	92	4	23	10	160	120	33	90	M12	2	160×4	150	155	235	350	200-32	200	340	85	28	M16
11	165 f_6	170m_6	164.5	185	7	644	112	4	23	10	175	130	33	90	M12	2	175×4	165	170	270	400	220-32	220	370	103	30	M20
12	180 f_6	185m_6	179.5	200	7	649	122	4	23	10	190	140	33	100	M16	2	190×4	180	185	270	405	240-32	240	405	107	30	M20
13	190 f_6	195m_6	189.5	213	7	789	137	5	23	10	200	150	33	110	M16	2	200×4	190	195	335	480	260-32	260	430	119	30	M20
14	210 f_6	215m_6	209.5	233	8	784	147	5	28	14	220	170	33	130	M16	2	220×5	210	215	335	480	280-32	280	460	132	30	M20
15	230 f_6	235m_6	229.5	253	8	899	157	5	28	14	240	180	39	140	M16	2	240×5	230	235	380	550	300-32	300	485	140	35	M24
16	240 f_6	245m_6	239.5	263	8	899	157	5	28	14	250	190	39	150	M20	2	250×5	240	245	380	550	320-32	320	520	140	35	M24
17	250 f_6	260m_6	249.5	278	8	982	177	5	30	14	265	200	39	150	M20	2	265×5	250	260	415	600	340-32	340	570	155	35	M24
18	280 f_6	285m_6	279.5	306	9	982	177	5	30	14	290	210	39	160	M20	2	290×5	280	285	415	600	360-32	360	590	162	35	M24
19	285 f_6	295m_6	284.5	316	9	1100	187	5	32	15	300	220	39	170	M24	2	300×5	285	295	465	670	380-32	380	640	166	40	M27
20	310 f_6	315m_6	309.5	336	9	1100	187	5	32	15	320	230	39	180	M24	2	320×6	310	315	465	670	390-32	390	650	166	40	M27
21	330 f_6	335m_6	329	358	9	1160	205	5	40	20	340	250	45	190	M24	2	340×6	330	335	490	715	420-32	420	670	186	45	M27
22	340 f_6	345m_6	339	368	9	1170	215	5	40	20	350	260	45	200	M24	2	350×6	340	345	490	725	440-32	440	720	194	45	M27

1) 胀紧盘不在我们的供货范围之内。如有需要的话，请另行订货。
Shrink disk does not belong to our scope of supply. Please order separately, if required.
2) 工作机驱动轴材质：60或强度更高的钢。根据用户要求，胀紧盘可布置在工作机侧。工作机驱动轴尺寸函索即复。
Material of driver machine shaft: 60 or higher strength. Shrink disk on machine side on request. Shrink disk is supplied as loose item. Dimensions of machine shaft on request.

齿轮箱 Gear Units　　带胀紧盘联接的空心轴 Hollow Shaft For Shrink Disk
类型B2 Type B2　　规格2...18 Sizes 2...18

X=要求预留的力矩扳手空间
X=Space required for torque wrench

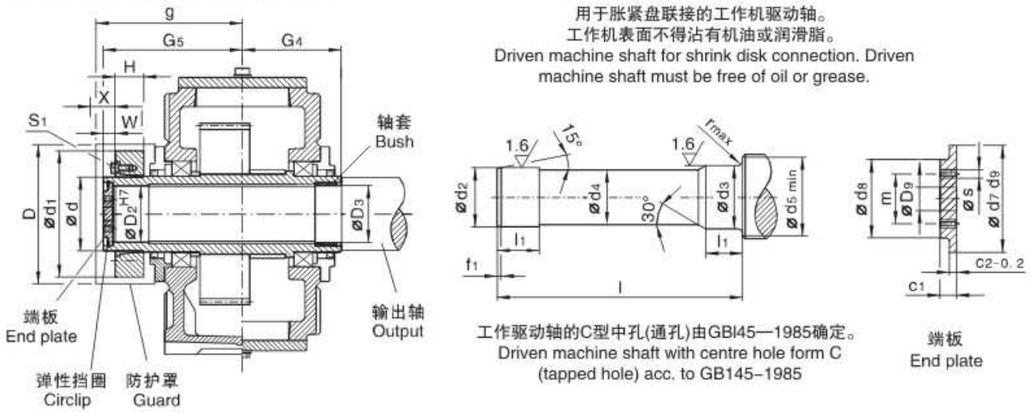

类型B2 Type B2																															
齿轮箱规格 Gear units size	工作机驱动轴[2] Driven machine shaft								端板 End plate								弹性挡圈 Ring Circlip	空心轴 Hollow shaft				胀紧盘[1] Shrink disk						螺钉 Screw	防护罩 Guard	
	d_2	d_3	d_4	d_5	f_1	l	l_1	r	c_1	c_2	d_7	d_8	d_9	m	s	数量 Qty.	GB89/3.2–86	D_2	D_3	G_4	G_5	类型 Type	d	d1	H	W	S_1	D	g
	mm																mm														
2	60 g_6	60 g_6	59.5	70	3	300	36	2	13	6	65	47	22	35	M6	2	65×2.5	60	60	135	180	80–32	80	141	31	16	M10	180	200
3	70g_6	70 h_6	69.5	80	4	326	38	2	17	7	75	55	22	40	M8	2	75×2.5	70	70	145	200	90–32	90	155	38	20	M10	200	220
4	85g_6	85h_6	84.5	95	4	386	48	2	17	7	90	70	22	50	M8	2	90×3	85	85	170	235	110–32	110	185	49	20	M12	235	250
5	100g_6	100h_6	99.5	114	5	453	53	2	20	8	105	80	26	55	M10	2	105×4	100	100	200	275	125–32	125	215	53	20	M12	275	285
6	110g_6	110h_6	109.5	124	5	453	58	3	20	8	115	85	26	60	M10	2	15×4	110	110	200	275	140–32	140	230	58	20	M14	285	285
7	120g_6	120h_6	119.5	134	5	533	68	3	20	8	125	90	26	65	M12	2	125×4	120	120	235	320	155–32	155	263	62	23	M14	330	335
8	130g_6	130h_6	129.5	145	6	538	73	3	20	8	135	100	26	70	M12	2	135×4	130	130	235	325	165–32	165	290	68	23	M16	340	340
9	140g_6	145m_6	139.5	160	6	609	82	4	23	10	150	110	33	80	M12	2	150×4	140	145	270	365	175–32	175	300	68	28	M16	360	380
10	150g_6	155m_6	149.5	170	6	629	92	4	23	10	160	120	33	90	M12	2	160×4	150	155	270	385	200–32	200	340	85	28	M16	395	400
11	165f_6	170m_6	164.5	185	7	744	112	4	23	10	175	130	33	90	M12	2	175×4	165	170	320	450	220–32	220	370	103	30	M20	435	470
12	180f_6	185m_6	179.5	200	7	749	122	4	23	10	190	140	33	100	M16	2	190×4	180	185	320	455	240–32	240	405	107	30	M20	450	470
14	210f_6	215m_6	209.5	233	8	894	147	5	28	14	220	170	33	130	M16	2	220×5	210	215	390	535	280–32	280	460	132	30	M20	525	555
16	240f_6	245m_6	239.5	263	8	1039	157	5	28	14	250	190	39	150	M20	2	250×5	240	245	450	620	320–32	320	520	140	35	M24	595	645
18	280f_6	285m_6	279.5	306	9	1177	177	5	30	14	290	210	39	160	M20	2	290×5	280	285	510	700	360–32	360	590	162	35	M24	635	725

1) 胀紧盘不在我们的供货范围之内。如有需要的话，请另行订货。
Shrink disk does not belong to our scope of supply. Please order separately, if required.
2) 工作机驱动轴材质：60或强度更高的钢。根据用户要求，胀紧盘可布置在工作机侧。工作机驱动轴尺寸函索即复。
Material of driver machine shaft: 60 or higher strength. Shrink disk on machine side on request. Shrink disk is supplied as loose item.
Dimensions of machine shaft on request.

齿轮箱 Gear Units　　带平键联接的空心轴 Hollow Shafts for Parallel Key Connections
类型H2,H3,H4,B3,B4 Type H2,H3,H4,B3,B4　　规格2...18 Sizes 2...18

规格2...18 Sizes 2...18

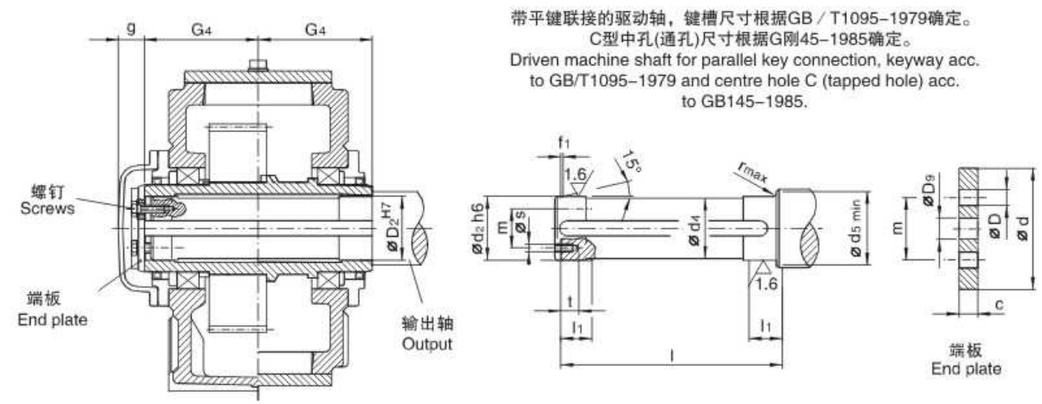

类型H2，H3，H4，B3，B4 Type H2，H3，H4，B3，B4																				
齿轮箱规格 Gear units size	工作机驱动轴[1] Driven machine shaft									端板 End plate					螺钉 Screw		空心轴 Hollow shaft		
	d_2	d_4	d_5	f_1	l	l_1	r	s	t	c	D	D_9	d	m	数量 Qty.	数量 Qty.	D_2	G_4	g
	mm																mm		
3	65	64.5	73	4	248	30	1.2	M10	18	8	11	18	78	45	M10×25	2	65	125	35
4	80	79.5	88	4	278	35	1.2	M10	18	10	11	22	100	60	M10×25	2	80	140	35
5	95	94.5	105	5	328	40	1.6	M10	18	10	11	26	120	70	M10×25	2	95	165	40
6	105	104.5	116	5	328	45	1.6	M10	18	10	11	26	120	70	M10×25	2	105	165	40
7	115	114.5	126	5	388	50	1.6	M12	20	12	13.5	26	140	80	M12×30	2	115	195	40
8	125	124.5	136	6	388	55	2.5	M12	20	12	13.5	26	150	85	M12×30	2	125	195	40
9	135	134.5	147	6	467	60	2.5	M12	20	12	13.5	33	160	90	M12×30	2	135	235	45
10	150	149.5	162	6	467	65	2.5	M12	20	12	13.5	33	185	110	M12×30	2	150	235	45
11	165	164.5	177	7	537	70	2.5	M16	28	15	17.5	33	195	120	M16×40	2	165	270	45
12	180	179.5	192	7	537	75	2.5	M16	28	15	17.5	33	220	130	M16×40	2	180	270	45
13	190	189.5	206	7	667	80	3	M16	28	18	17.5	33	230	140	M16×40	2	190	335	45
14	210	209.5	226	8	667	85	3	M16	28	18	17.5	33	250	160	M16×40	2	210	335	45
15	230	229.5	248	8	756	100	3	M20	38	25	22	39	270	180	M20×55	4	230	380	60
16	240	239.5	258	8	756	100	3	M20	38	25	22	39	280	180	M20×55	4	240	380	60
17	250	249.5	270	8	826	110	4	M20	38	25	22	39	300	190	M20×55	4	250	415	60
18	275	274.5	295	9	826	120	4	M20	38	25	22	39	330	210	M20×55	4	275	415	60

1) 工作机驱动轴材质：60或强度更高的钢。平键不在我们的供货范围之内。如果需要的话，请另行订货。
Material of driven machine shaft: 60 or higher strength. Parallel key does not belong to our scope of supply.
Please order separately, if required.

齿轮箱 Gear Units　　带胀平键联接的空心轴 Hollow Shafts for Parallel Key Connections
类型B2 Type B2　　规格2...18 Sizes 2...18

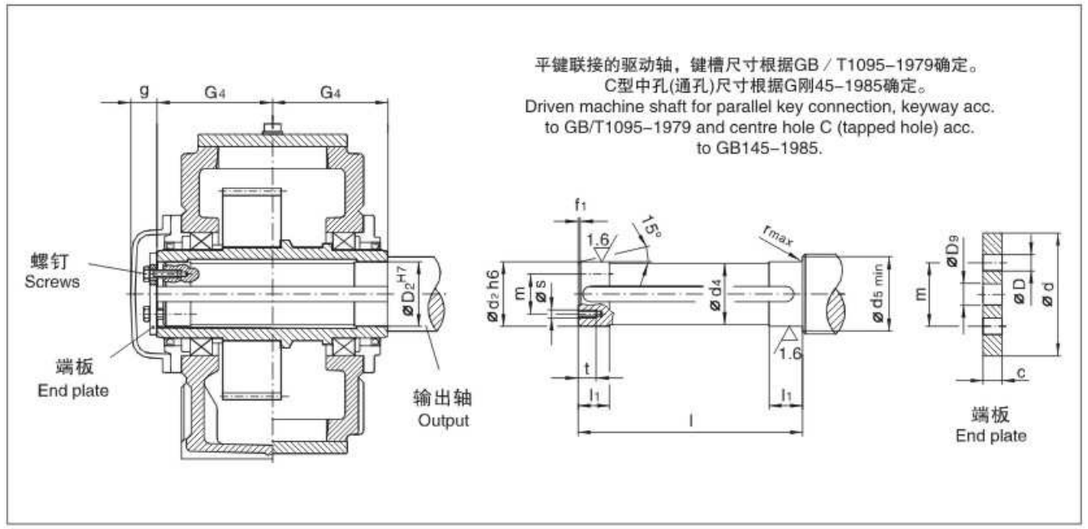

齿轮箱规格 Gear units size	类型B2 Type B2																	
	工作机驱动轴[1] Driven machine shaft									端板 End plate					螺钉 Screw		空心轴 Hollow shaft		
	d_2	d_4	d_5	f_1	l	l_1	r	s	t	c	D	D_9	d	m	规格 Size	数量 Qty.	D_3	G_4	g
	mm																mm		
2	55	54.5	63	3	268	30	1.2	M8	15	8	9	18	70	40	M8×20	2	55	135	35
3	65	64.5	73	4	288	30	1.2	M10	18	8	11	18	78	45	M10×25	2	65	145	35
4	80	79.5	88	4	338	35	1.2	M10	18	10	11	22	100	60	M10×25	2	80	170	35
5	95	94.5	105	5	398	40	1.6	M10	18	10	11	26	120	70	M10×25	2	95	200	40
6	105	104.5	116	5	398	45	1.6	M10	18	10	11	26	120	70	M10×25	2	105	200	40
7	115	114.5	126	5	468	50	1.6	M12	20	12	13.5	26	140	80	M12×30	2	115	235	40
8	125	124.5	136	6	468	55	2.5	M12	20	12	13.5	26	150	85	M12×30	2	125	235	40
9	135	134.5	147	6	537	60	2.5	M12	20	12	13.5	33	160	90	M12×30	2	135	270	45
10	150	149.5	162	6	537	65	2.5	M12	20	12	13.5	33	185	110	M12×30	2	150	270	45
11	165	164.5	177	7	637	70	2.5	M16	28	15	17.5	33	195	120	M16×40	2	165	320	45
12	180	179.5	192	7	637	75	2.5	M16	28	15	17.5	33	220	130	M16×40	2	180	320	45
14	210	209.5	226	8	777	85	3	M16	28	18	17.5	33	250	160	M16×40	2	210	390	45
16	240	239.5	258	8	896	100	3	M20	38	25	22	39	280	180	M20×55	4	240	450	60
18	275	274.5	295	9	1016	120	4	M20	38	25	22	39	330	210	M20×55	4	275	510	60

1) 工作机驱动轴材质：60或强度更高的钢。平键不在我们的供货范围之内。如果需要的话，请另行订货。
Material of driven machine shaft: 60 or higher strength. Parallel key does not belong to our scope of supply. Please order separately, if required.

齿轮箱 Gear Units　　冷却盘管 Cooling Coils　　卧式安装 Horizontal
类型H..H,H..M,B..H,B..M Type H..H,H..M,B..H,B..M　　规格1...22 Sizes 1...22

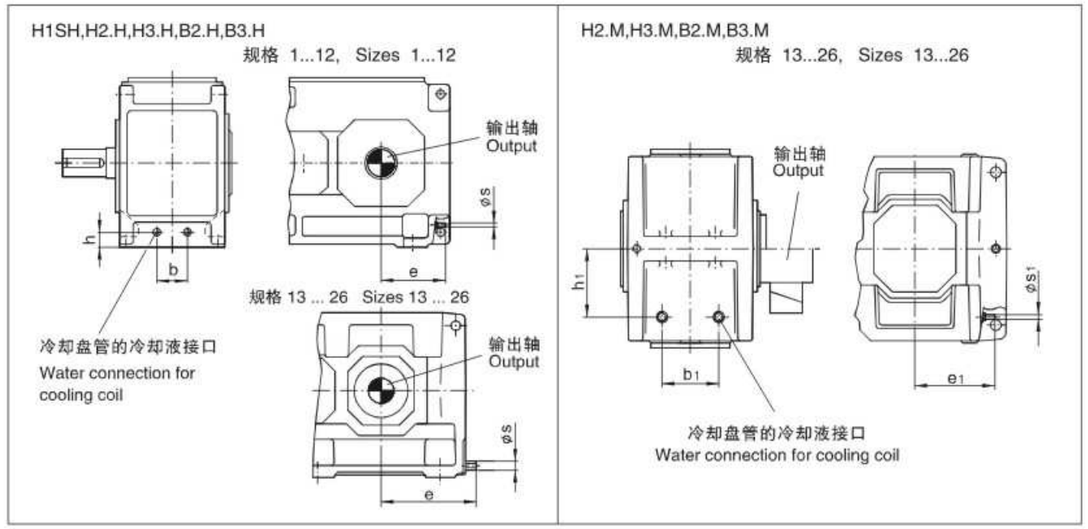

规格 Size	类型H1SH Type H1SH					类型H2.H/B3.H Type H2.H/B3.H					类型H3.H Type H3.H					类型B2.H Type B2.H				
	b mm	e mm	h mm	s	1)	b mm	e mm	h mm	s	1)	b mm	e mm	h mm	s	1)	b mm	e mm	h mm	s	1)
1	30	150	45	G1/4	4	–	–	–	–	–	–	–	–	–	–	64	125	40	G1/4	4
2	–	–	–	–	–	–	–	–	–	–	–	–	–	–	–	78	130	40	G1/4	4
3	48	205	74	G1/2	4	34	130	55	G1/2	4	–	–	–	–	–	58	140	52	G1/4	4
4	–	–	–	–	–	34	155	60	G1/2	4	–	–	–	–	–	74	160	54	G1/2	4
5	88	270	90	G1/2	4	68	170	64	G1/2	4	70	175	60	G1/2	4	130	175	62	G1/2	8
6	–	–	–	–	–	70	215	68	G1/2	4	70	220	69	G1/2	4	120	220	68	G1/2	4
7	124	310	135	G1/2	4	100	210	83	G1/2	4	80	210	83	G1/2	4	140	210	80	G1/2	8
8	–	–	–	–	–	100	270	83	G1/2	4	80	270	83	G1/2	4	140	270	80	G1/2	4
9	116	365	110	G1/2	8	140	245	110	G1/2	8	150	245	107	G1/2	4	232	245	110	G1/2	8
10	–	–	–	–	–	100	295	95	G1/2	8	90	295	95	G1/2	4	150	295	90	G1/2	8
11	146	425	130	G1/2	8	110	275	95	G1/2	8	200	275	115	G1/2	8	312	275	115	G1/2	8
12	–	–	–	–	–	200	360	109	G1/2	8	200	360	115	G1/2	8	300	360	115	G1/2	8
13	152	480	150	G1/2	8	252	455	116	G1/2	8	252	460	116	G1/2	8	324	460	116	G1/2	8
14	–	–	–	–	–	252	525	116	G1/2	8	252	530	116	G1/2	8	324	530	116	G1/2	8
15	172	560	130	G1/2	8	290	535	119	G1/2	8	290	540	119	G1/2	8	396	540	119	G1/2	8
16	–	–	–	–	–	290	580	119	G1/2	8	290	585	119	G1/2	8	396	585	119	G1/2	8
17	202	600	145	G1/2	8	340	575	134	G1/2	8	300	580	134	G1/2	8	468	580	134	G1/2	8
18	–	–	–	–	–	340	635	134	G1/2	8	300	640	134	G1/2	8	468	640	134	G1/2	8
19	根据用户要求供货 On request					根据用户要求供货 On request					根据用户要求供货 On request					–				
20~22																				

规格 Size	类型H2.M/B3 Type H2.M/B3					类型H3.M Type H3.M					类型B2.M Type B2.M				
	b1 mm	e1 mm	h1 mm	s1	1)	b1 mm	e1 mm	h1 mm	s1	1)	b1 mm	e1 mm	h1 mm	s1	1)
13	252	335	300	G1/2	8	252	335	300	G1/2	8	324	335	300	G1/2	8
14	252	405	300	G1/2	8	252	405	300	G1/2	8	324	405	300	G1/2	8
15	290	395	335	G1/2	8	290	395	340	G1/2	8	396	390	345	G1/2	8
16	290	440	335	G1/2	8	290	440	340	G1/2	8	396	435	345	G1/2	8
17	340	425	380	G1/2	8	300	425	380	G1/2	8	324	425	395	G1/2	8
18	340	485	380	G1/2	8	300	485	380	G1/2	8	324	485	395	G1/2	8
19~22	根据用户要求供货 On request					根据用户要求供货 On request					–				

1) 冷却液需要量(L／mm)
Required cooling water quantity (L/min)

冷却盘管适用于淡水、海水和半咸水。
Cooling coil suitable for fresh, sea and brackish.

齿轮箱 Gear Units　冷却盘管 Cooling Coils　立式安装 Vertica
类型H..V,B..V Type H..V,B..V　规格1...22 Sizes 1...22

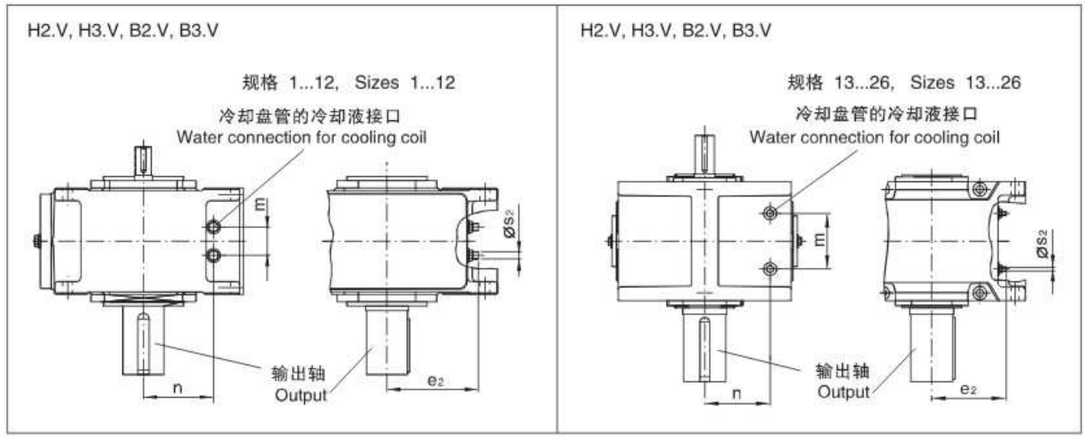

规格 Size	类型H2.V/B/.V Type H2.V/B3.V					类型H3.V Type H3.V					类型B2.V Type B2.V				
	m mm	n mm	e2 mm	s2	1)	m mm	n mm	e2 mm	s2	1)	m mm	n mm	e2 mm	s2	1)
1	–	–	–	–	–	–	–	–	–	–	64	90	125	G1/4	4
2	–	–	–	–	–	–	–	–	–	–	78	105	130	G1/4	4
3	34	120	130	G1/2	4	–	–	–	–	–	58	123	140	G1/2	4
4	34	140	155	G1/2	4	–	–	–	–	–	74	146	160	G1/2	4
5	68	166	170	G1/2	4	70	170	175	G1/2	4	130	168	175	G1/2	8
6	70	162	215	G1/2	4	70	161	220	G1/2	4	120	162	220	G1/2	4
7	100	197	210	G1/2	4	80	197	210	G1/2	4	140	200	210	G1/2	8
8	100	197	270	G1/2	4	80	197	270	G1/2	4	140	200	270	G1/2	4
9	140	210	245	G1/2	8	150	213	245	G1/2	4	232	210	245	G1/2	8
10	100	225	295	G1/2	8	90	225	295	G1/2	4	150	230	295	G1/2	8
11	110	285	275	G1/2	8	200	265	275	G1/2	8	312	265	275	G1/2	8
12	200	271	360	G1/2	8	200	265	360	G1/2	8	300	265	360	G1/2	8
13	252	300	335	G1/2	8	252	300	335	G1/2	8	324	300	335	G1/2	8
14	252	300	405	G1/2	8	252	300	405	G1/2	8	324	300	405	G1/2	8
15	290	335	395	G1/2	8	290	340	395	G1/2	8	396	345	390	G1/2	8
16	290	335	440	G1/2	8	290	340	440	G1/2	8	396	345	435	G1/2	8
17	340	380	425	G1/2	8	300	380	425	G1/2	8	324	395	425	G1/2	8
18	340	380	485	G1/2	8	300	380	485	G1/2	8	324	395	485	G1/2	8
19–22	根据用户要求供货 On request					根据用户要求供货 On request					–				

类型 Types	规格 Size	浸油润滑 Dip lubrication				电动泵强制润滑 Forced lubrication with motor pump				电动泵强制润滑 Forced lubrication with motor pump			
		适用布置形式 For design				适用布置形式 For design				适用布置形式 For design			
		A	B	C	D	A	B	C	D	A	B	C	D
H2.V	4	×	×	×	×	–	–	–	–				
	5–12	×	×	×	×	–	×	–	×				
	13–18	–	–	–	–	–	×	–	×				
H3.V	5–12	×	×	×	×	–	×	–	×		根据用户要求供货 On request		
	13–18	–	–	–	–	–	×	–	×				
B2.V	4	×	×	×	×	–	–	–	–				
	5–12	×	×	×	×	×	×	–	–				
	13–18	–	–	–	–	×	×	–	–				
B3.V	4	×	×	×	×	–	–	–	–				
	5–12	×	×	×	×	–	–	×	×				
	13–18	–	–	–	–	–	–	×	×				

X=可供货　X = Possible variants

1) 冷却液需要量 (L / mm)　Required cooling water quantity (L/min)
冷却盘管适用于淡水、海水和半咸水。Cooling coil suitable for fresh, sea and brackish.

齿轮箱 Gear Units　润滑油供给方式可选方案 Oil Supply for　立式安装 Vertical
类型H2...H4,B2...B4 Type H2...H4,B2...B4　规格1...18 Sizes 1...18

各种润滑油供给方式 Oil supply variants
立式安装齿轮箱所用的各种润滑油供给方式列于表1
Oil supply variants for vertical gear units can be derived from table 1.

表1 Table 1

类型 Types	规格 Size	浸油润滑 Dip lubrication	法兰泵强制润滑 Forced lubrication flanged on pump	电动泵强制润滑 Forced lubrication motor pump
H2.V	4	×	–	–
	5...12	×	×	–
	13...18	–	×	–
H3.V	5...12	×	×	×
	13...18	–	×	×
H4.V	5...12	×	×	×
	13...18	–	–	×
B2.V	4	×	–	–
	5...12	×	×	×
	13...18	–	×	×
B3.V	4	×	–	–
	5...12	×	×	×
	13...18	–	×	×
B4.V	5...12	×	×	×
	13...18	–	–	×

X=可供货　X = Possible variants

1) 采用实心轴、带储油管的齿轮箱所用的各种润滑油供给方式见108页表14。
1) For possible variants for gear units with solid shaft and oil retaining tube, see page108, table 14.

推荐供油方式 Prefer redorder:
规格6号(含)以下各型：浸油润滑，规格7号以上各型：强制润滑
up to size 6–dip lubrication from size 7 up. forced lubrication

对各种润滑油供给方式的说明 Notes on the individual oil supply variants

浸油润滑 Dip lubrication
当用浸油润滑时，所用需要润滑的零部件均需浸在润滑油液中。
附带的补偿油箱用于储藏涨溢的油液。
选择依据参见102页。
In case of dip lubrication, all parts to be lubricated are lying in the oil.
an oil compensating tank has been fitted for oil ex–pansion.
criteria for selection, see page 102.

强制润滑 Forced lubrication:
当采用强制润滑时，所有未浸在润滑油液中的零部件均通过一个法兰联接油泵或单独的电动油泵进行飞溅润滑。
选择依据参见103–107页。
In case of forced lubrication, all parts which are not lying in oil are splash lubricated by means of a flanged–on pump or by a separate motor pump. Criteria for selection, see pages 103–107.

齿轮箱 Gear Units　浸油润滑方式 Dip Lubrication for　立式安装 Vertical
类型H2...H4,B2...B4 Type H2...H4,B2...B4　规格1...12 Sizes 1...12

当选用浸油润滑方式时，应满足下列要求：a)最大输入转速N1，参见表2；b)允许油温参见表3。
For the design with dip lubrication the following criteria have to be observed:
a)Maximum input speed n1 ,See table 2. b)Permissible oil temperatures, see table 3.

表2 Table 2

规格 Size	类型 Type											
	H2.V		H3.V		H4.V		B2.V		B3.V		B4.V	
	iN	n1 max	iN	n1 max	iN	n1 max	iN	n1 max	iN	n1 max	iN	n1 max
1	–	–	–	–	–	–	5–6.3 7.1–8 9–18	1200 1500 1800	–	–	–	–
2	–	–	–	–	–	–	5–5.6 6.3–8 9–10 11.2–18	1000 1200 1500 1800	–	–	–	–
3	6.3–7.1 8–10 11.2–224	1200 1500 1800	–	–	–	–	5–7.1 8–9 10–12.5 14–18	1000 1200 1500 1800	20–71	1800	–	–
4	6.3–10 11.2–12.5 14–22.4	1200 1500 1800	–	–	–	–	5–5.6 6.3–7.1 8–9 10–11.2	750 900 1000 1200	12.5–71	1800	–	–
5	6.3–9 10–12.5 14–16 18–22.4	1000 1200 1500 1800	25–90	1800	–	–	6.3–7.1 8–9 10–11.2	750 900 1000	12.5–71	1800	80–315	1800
6	8–11.2 12.5–16 18–20 22.4–28	1000 1200 1500 1800	31.5–112	1800	–	–	9 10–11.2 12.5–14	750 900 1000	16–90	1800	100–400	1800
7	6.3–7.1 8–9 10–11.2 12.5–16 18–22.4	750 900 1000 1200 1500	25–90	1800	100–355	1800	9–10 11.2	750 900	12.5–25 28–71	1500 1800	80–315	1800
8	8–9 10–11.2 12.5–14 16–20 22.4–28	750 900 1000 1200 1500	31.5–112	1800	125–450	1800	11.2–12.5 14	750 900	16–31.5 35.5–90	1500 1800	100–400	1800
9	6.3–7.1 8–10 11.2–224	1200 1500 1800	25–90	1800	100–355	1800	5–5.6 6.3–7.1 8–10 11.2	900 1000 1200 1500	12.5–71	1800	80–315	1800
10	8–9 10–12.5 14–28	1200 1500 1800	31.5–112	1800	125–450	1800	6.3–7.1 8–9 10–12.5 14	900 1000 1200 1500	16–90	1800	100–400	1800
11	6.3–7.1 8–10 11.2–12.5 14–22.4	1000 1200 1500 1800	25–90	1800	100–355	1800	5.6–6.3 7.1–8 9–10 11.2	750 900 1000 1200	12.5–22.4 25–71	1500 1800	80–315	1800
12	8–9 10–12.5 14–16 18–28	1000 1200 1500 1800	31.5–112	1800	125–450	1800	7.1–8 9–10 11.2–12.5 14	750 900 1000 1200	16–28 31.5–90	1500 1800	100–400	1800

n1和iN值不在表2所列范围内的齿轮箱必须采用强制润滑方式。
Gear units with nl and iN which are not listed in table 2 must be designed for forced lubrication

表3 Table 3

40℃以下的ISO–VG粘度 mm^2/s (cst) Viscosity ISO–VG at 40 ℃ in mm^2/s(cst)	浸油允许极限温度，℃ Permissible temperature limit in~C for dip lubrication	
	矿物油 Mineral oil	合成油 Synthetic oil
VG 220	–15	–25
VG 320	–12	–25
VG 460	–9	–25

平行轴齿轮箱 Helical Gear Units　强制润滑方式 Forced Lubrication for
立式安装 Vertical　类型H2...H4 Type H2...H4　规格5...18 Sizes 5...18

表4 Table 4

40℃以下的ISO—VG粘度 mm^2/s (cst) Viscosity ISO – VG at 40 ℃ in mm^2/s(cst)	强制润滑允许极限温度℃ Permissible temperature limit in ℃ forced feed lubrication			
	矿物油 Mineral oil		合成油 Synthetic oil	
	最低 min	最高 max	最低 min	最高 max
VG 220	10	80	0	90
VG 320	15	90	5	100
VG 460	20	95	10	105

强制润滑：
当使用强制润滑时，工作粘度不得超过1800cSt。最低工作粘度不得小于25cSt。当油温低于表4所列的数值时，必须提供浸油润滑方式，或者对润滑油进行加热。

Forced lubrication :
In case of forced lubrication, the operating Viscosity 1800 cSt must not be exceeded during starting. A minimum operating viscosity of 25 cSt must be ensured. If the temperatures are below the values as listed in table4, dip Lubrication has to be provided or the oil must be heated.

表5 Table 5

立式安装平行轴齿轮箱采用法兰泵
Assignment of flanged–on pumps to vertical helical gear units

类型 Types	n1 1/min	齿轮箱规格 Gear units size		法兰泵规格 Flanged–on pumps size	齿轮箱规格 Gear units size			法兰泵规格 Flanged–on pumps size
		5,7,9,11	6,8,10,12		13,15,17	14	16,18	
		速比 Ratio iN			速比 Ratio iN			
H2.V[1]	750–1800	6.3–22.4	8–28	KSW1	6.3–22.4	8–28–	7.1–25	KSW2
H3.V[1]	1201–1800	25–35.5	31.5–45	KSW2	22.4–35.5	28–45	25–40	KSW3
		40–71	50–90	KSW3	40–71	50–90	45–80	KSW4
		80–90	100–112	*	80–90	100–112	90–100	*
	901–1200	25–50	31.5–63	KSW3	22.4–25	28–31.5	25–28	KSW3
		56–90	71–112	*	28–45	35.5–56	31.5–50	KSW4
					50–90	63–112	56–100	*
	750–900	25–35.5	315–45	KSW3	22.4–35.5	28–45	25–40	KSW4
		40–90	50–112	*	40–90	50–112	45–100	*
H4.V[1]	1201–1800	100–180	125–224	KSW3	100–355	125–450	112–400	*
		200–335	250–450	*				
	901–1200	100–125	125–160	KSW3				
		140–335	180–450	*				
	750–900	100–335	125–450	*				

*= 所需电动泵，参见表7
*= Motor pump require,see table 7.

1）布置形式B.D
Design B.D

平行轴齿轮箱 Helical Gear Units　强制润滑方式 Forced Lubrication for 立式安装 Vertical　类型H2...H4 Type H2...H4　规格5...18 Sizes 5...18

表6 Table 6

立式安装平行轴齿轮箱采用法兰泵
Assignment of flanged-on pumps to vertical helical gear units

类型 Types	n1 r/min	齿轮箱规格 Gear units size		法兰泵规格 Flanged-on pumps size	齿轮箱规格 Gear units size			法兰泵规格 Flanged-on pumps size
		5,7,9,11	6,8,10,12		13,15,17	14	16,18	
		速比 Ratio iN			速比 Ratio iN			
H2.V[1]	750-1800	6.3-22.4	8-28	KSW1	6.3-22.4	8-28	7.1-25	KSW2
H3.V[1]	1201-1800	25-40	31.5-50	KSW2	22.4-50	28-63	25-56	KSW3
		45-90	56-112	KSW3	56-90	71-112	63-90	KSW4
							100	*
	901-1200	25-56	31.5-71	KSW3	22.4-31.5	28-40	25-35.5	KSW3
		63-90	80-112	*	35.5-56	45-71	40-63	KSW4
					63-90	80-112	71-100	*
	750-900	25-45	31.5-56	KSW3	22.4-25	28-31.5	25-28	KSW3
		50-90	63-112	*	28-45	35.5-56	31.5-50	KSW4
					50-90	63-112	56-100	*
H4.V[1]	1201-1800	100-224	125-280	KSW3	100-355	125-450	112-400	*
		250-355	315-450	*				
	901-1200	100-140	125-180	KSW3				
		160-355	200-450	*				
	750-900	100-112	125-140	KSW3				
		125-335	160-450	*				

*= 所需电动泵，参见表7
*= Motor pump require,see table 7.

1）布置形式A,C　Design A,C

表7 Table 7

立式安装平行轴齿轮箱采用法兰泵
Assignment of flanged-on pumps to vertical helical gear units

类型 Types	规格 Sizes	布置方式 Design	油泵 Pump
H2.V	5...18	A/B/C/D	1)
H3.V	5...18	A/C	SF 2/8
	5...12	B/D	SF 2/8
	13...18		SF 2/13
H4.V	7...12	A/C	SF 2/8
	13...18		SF 2/13
	7...18	B/D	SF 2/13

1）只提供法兰泵 Flanged-on pump only

直交轴齿轮箱 Bevel-helical Gear Units　强制润滑方式 Forced Lubrication for 立式安装 Vertical　类型B2...B4 Type B2...B4　规格5...18 Sizes 5...18

表8 Table 8

40℃以下的ISO—VG粘度 mm²/s (cst) Viscosity ISO – VG at 40 ℃ in mm²/s(cst)	强制润滑允许极限温度℃ Permissible temperature limit in ℃ forced feed lubrication			
	矿物油 Mineral oil		合成油 Synthetic oil	
	最低 min	最高 max	最低 min	最高 max
VG 220	10	80	0	90
VG 320	15	90	5	100
VG 460	20	95	10	105

强制润滑：
当使用强制润滑时，工作粘度不得超过1800cSt。最低工作粘度不得小于25cSt。当油温低于表8所列的数值时，必须提供浸油润滑方式，或者对润滑油进行加热。

Forced lubrication :
In case of forced lubrication, the operating Viscosity 1800 cSt must not be exceeded during starting. A minimum operating viscosity of 25 cSt must be ensured. If the temperatures are below the values as listed in table8, dip Lubrication has to be provided or the oil must be heated.

表9 Table 9

立式安装平行轴齿轮箱采用法兰泵
Assignment of flanged-on pumps to vertical helical gear units

类型 Types	n1 1/min	齿轮箱规格 Gear units size		法兰泵规格 Flanged-on pump size	齿轮箱规格 Gear units size			法兰泵规格 Flanged-on pump size
		5,7,9,11	6,8,10,12		13,15,17	14	16,18	
		速比 Ratio iN			速比 Ratio iN			
B2.V[1]	1201-1800	5-6.3	6.3-8	KSW1	5-8	6.3-10	5.6-9	KSW2
		7.1-11.2	9-14	KSW2	9-11.2	11.2-14	10-12.5	KSW3
	901-1200	5-8	6.3-10	KSW2	5	63	56	KSW2
		9-11.2	11.2-14	KSW3	5.6-11.2	7.1-14	6.3-12.5	KSW3
	750-900	5-6.3	6.3-8	KSW2	5-10	6.3-12.5	5.6-11.2	KSW3
		7.1-10	9-12.5	KSW3	112	14	125	*
		112	14	*				
B3.V[2]	1201-1800	12.5-35.5	16-45	KSW2	12.5-35.5	16-45	14-40	KSW3
		40-71	50-90	KSW3	40-71	50-90	45-80	KSW4
	901-1200	12.5-25	16-31.5	KSW2	12.5-25	16-31.5	14-28	KSW3
		28-50	35.5-63	KSW3	28-50	35.5-63	31.5-56	KSW4
		56-71	71-90	*	56-71	71-90	63-80	*
	750-900	12.5-35.5	16-45	KSW3	12.5-35.5	16-45	14-40	KSW4
		40-71	50-90	*	40-71	50-90	45-80	*
B4.V[1]	1201-1800	80-125	100-160	KSW2	80-315	100-400	90-355	*
		140-250	180-315	KSW3				
		280-315	355-400	*				
	901-1200	80-180	100-224	KSW3				
		200-315	250-400	*				
	750-900	80-125	100-160	KSW3				
		140-315	180-400	*				

*= 所需电动泵，参见表11
*= Motort pump requie,see table 11.

1）布置形式A,B　Design A,B
2）布置形式C,D　Design C,D

直交轴齿轮箱 Bevel–helical Gear Units　　强制润滑方式 Forced Lubrication for
立式安装 Vertical　　类型B2...B4 Type B2...B4　　规格5...18 Sizes 5...18

表10 Table 10

立式安装平行轴齿轮箱采用法兰泵
Assignment of flanged–on pumps to vertical helical gear units

类型 Types	n1 1/min	齿轮箱规格 Gear units size		法兰泵规格 Flanged–on pump size	齿轮箱规格 Gear units size			法兰泵规格 Flanged–on pump size
		5,7,9,11	6,8,10,12		13,15,17	14	16,18	
		速比 Ratio iN			速比 Ratio iN			
B2.V[1]	1201–1800	5.6–6.3	6.3–8	KSW1	5–6.3	6.3–8	5.6–7.1	KSW2
		7.1–11.2	9–14	KSW2	7.1–11.2	9–14	8–12.5	KSW3
	901–1200	5–8	6.3–10	KSW2	5–10	6.3–12.5	5.6–11.2	KSW3
		9–11.2	11.2–14	KSW3	11.2	14	12.5	*
	750–900	5–6.3	6.3–8	KSW2	5–7.1	6.3–9	5.6–8	KSW3
		7.1–10	9–12.5	KSW3	8–11.2	10–14	9–12.5	*
		11.2	14	*				
B3.V[2]	1201–1800	12.5–35.5	16–45	KSW2	12.5–22.4	16–28	14–25	KSW2
		40–71	50–90	KSW3	25–40	31.5–63	28–56	KSW3
					56–71	71–90	63–80	KSW4
	901–1200	12.5–25	16–31.5	KSW2	12.5–35.5	16–45	14–40	KSW3
		28–50	35.5–63	KSW3	40–56	50–71	45–63	KSW4
		56–71	71–90	*	63–71	80–90	71–80	*
	750–900	12.5–35.5	16–45	KSW3	12.5–25	16–31.5	14–28	KSW3
		40–71	50–90	*	28–40	35.5–50	31.5–45	KSW4
					45–71	56–90	50–80	*
B4.V[1]	1201–1800	80–100	100–224	KSW3	80–315	100–400	90–355	*
		200–315	250–400					
	901–1200	80–125	100–160	KSW3				
		140–315	180–400	*				
	750–900	80–90	100–112	KSW3				
		100–315	125–400	*				

*= 所需电动泵，参见表11
*= Motort pump requie,see table 11.

1）布置形式C,D　　Design C,D
2）布置形式A,B　　Design A,B

表11 Table 11

立式安装直交齿轮箱机采用法兰泵
Assignment of flanged–on pumps to vertical bevel–helical gear units

类型 Types	规格 Size	布置方式 Design	油泵 Pump
B2.V	5...12	A/B	SF 2/5
	13...18		SF 2/8
	5...18	C/D	SF 2/8
B3.V	5...12	A/B	SF 2/8
	13...18		SF 2/13
	5...12	C/D	SF 2/8
	13...18		SF 2/13
B4.V	5...12	A/B	SF 2/8
	13...18		SF 2/13
	5...12	C/D	SF 2/8
	13...18		SF 2/13

齿轮箱 Gear Units　　电动泵强制润滑方式 Mounted Motor Pumps　　立式安装 Vertica
类型H3,H4,B2,B3,B4 Type H3,H4,B2,B3,B4　　规格5...18 Sizes 5...18

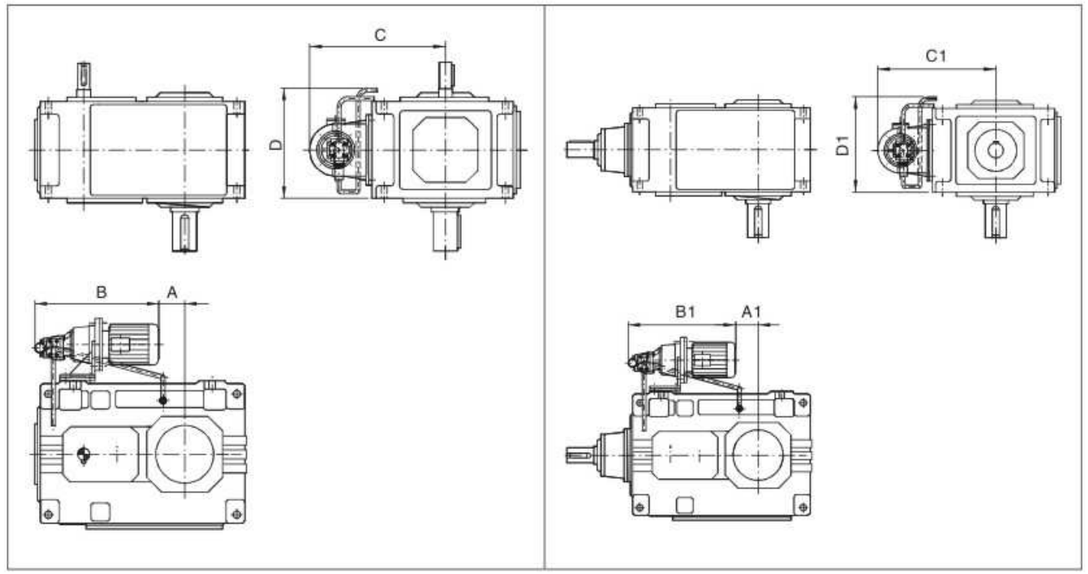

表12 Table 12

安装尺寸 mounting dimensions on mm

类型 Tyoes	规格 Size	布置形式 Design	A	B	C	D
H3.V	5/6	A/B/C/D	–30/5	560	480	385
	7/8	A/B/C/D	55/100	585	550	430
	9/10	A/B/C/D	140/190	610	565	500
	11/12	A/B/C/D	375/445	530	625	560
	13/14	A/C	155/225	880	670	700
	13/14	B/D	100/170	935	670	700
	15/16	A/C	275/320	965	710	770
	15/16	B/D	220/265	1020	710	770
	17/18	A/C	250/310	1040	770	835
	17/18	B/D	195/255	1095	770	835
H4.V	7/8	A/C	55/100	600	550	430
	7/8	B/D	0/45	680	550	430
	9/10	A/C	140/190	625	565	500
	9/10	B/D	85/135	705	565	500
	11/12	A/C	375/445	550	625	560
	11/12	B/D	320/390	635	625	560
	13/14	A/B/C/D	135/205	910	670	700
	15/16	A/B/C/D	255/300	1000	710	775
	17/18	A/B/C/D	230/290	1070	775	835

表13 Table 13

安装尺寸 mounting dimensions on mm

类型 Tyoes	规格 Size	布置形式 Design	A1	B1	C1	D1
B2.V	5/6	A/B/C/D	–160/–125	480	470	415
	7/8	A/B/C/D	5/50	480	525	510
	9/10	A/B/C/D	60/110	480	565	570
	11/12	A/B/C/D	150/220	480	625	660
	13/14	A/B/C/D	–70/0	755	670	805
	15/16	A/B/C/D	15/60	780	710	910
	17/18	A/B/C/D	–5/55	890	775	1025
B3.V	5/6	A/B/C/D	–85/–50	480	480	365
	7/8	A/B/C/D	–5/40	480	550	430
	9/10	A/B/C/D	65/115	480	565	500
	11/12	A/B/C/D	280/350	480	625	560
	13/14	A/B/C/D	35/105	810	670	700
	15/16	A/B/C/D	120/165	875	710	775
	17/18	A/B/C/D	165/225	970	775	835
B4.V	5/6	A/B/C/D	–35/0	480	480	385
	7/8	A/B/C/D	55/100	480	550	430
	9/10	A/B/C/D	140/190	615	565	500
	11/12	A/B/C/D	375/445	530	625	560
	13/14	A/B/C/D	135/205	905	670	700
	15/16	A/B/C/D	255/300	990	710	775
	17/18	A/B/C/D	230/290	1065	775	835

齿轮箱 Gear Units
采用实心轴、带有储油管的齿轮箱的润滑油供给方式
Oil Supply for Gear Units With Solid Shaft and Oil Retaining
立式安装 Vertical　　类型H2...H4, B2...B4　　规格5...18

表14 Table 14

可选润滑油供给方式 possible oil supply variants			
类型 Types	规格 Size	布置形式 Design	
		B	C
H2SV	5–6	O [1]	–
	7–12	O [2]	–
	13–18	O [3]	–
H3SV	5–7	O	–
	7–12	O	–
	13–18	O	–
B2SV	5–6	–	O
	7–12	–	O
	13–18	–	O
B3SV	5–6	–	O
	7–12	–	O
	13–18	–	O
B4SV	5–6	–	O
	7–12	–	O
	13–18	–	O

– = 布置形式不允许 Design not possible
O = 可选强制润滑 Forced lubrication possible
1) 对于规格5号齿轮箱，仅适用于速比i≤16　For size 5 only possible up to i≤16
2) 对于规格7号齿轮箱，仅适用于速比i≤16　For size 7 only possible up to i≤16
对于规格11号齿轮箱，仅适用于速比i≤18　For size 11 only possible up to i≤18
3) 对于规格13号齿轮箱，仅适用于速比i≤18　For size 13 only possible up to i≤18
对于规格17号齿轮箱，仅适用于速比i≤16 For size 17 only possible up to i≤16

齿轮箱 Gear Units　　电机法兰联接 Motor Mounting With Flanges
类型H2,H3,H4　Type H2,H3,H4

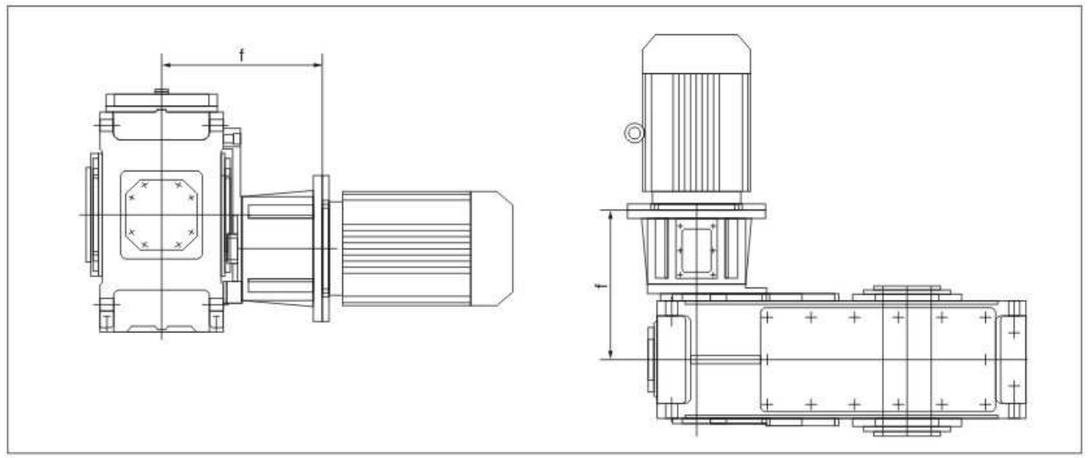

H2..		
电机功率 Motor Power	规格Size	
	4	5/6
	f	mm
11–15kW	403	
18.5–22kW	403	428
30kW	405	430
37–45kW	442	467
55kW		467

H4..						
电机功率 Motor Power	规格Size					
	7/8	9		10		11/12
	f			mm		
		齿轮轴 1；传动比 iN/Ratio iN				
		≥3.15	≤2.8	≥3.15	≤2.8	
2.2–4kW	318					
5.5–7.5kW	341	379		384		
11–15kW	383	421	430	426	435	493
18.5–22kW		421	430	426	435	493
30kW			432		437	495
37–45kW			469		474	532
55kW						532

H3									
电机功率 Motor Power	规格 / Size								
	7/8		9		10		11/12		
	ff					mm			
	齿轮轴 1；传动比 iN/Ratio iN								
	≥3.15	≤2.8	–0.85	≤2.8	–0.85	≤2.8	≥4.5	–0.85	≤2.8
			≥4.5		≥4.5				
11–15kW	388		463	508	468	513			
18.5–22kW	388	413	463	508	468	513			
30kW	390	415	465	510	470	515			
37–45kW	427	452	502	547	507	552	507	532	577
55kW	427	452	502	547	507	552	507	532	577
75–90kW			502	547	507	552	507	532	577

*标准电机安装尺寸参见第109页。Fitting dimensions for standard motors see page 109.

齿轮箱 Gear Units　　钟形罩法兰联接 Motor mounting with bell housing flanges
类型B2,B3,B4　Type B2,B3,B4

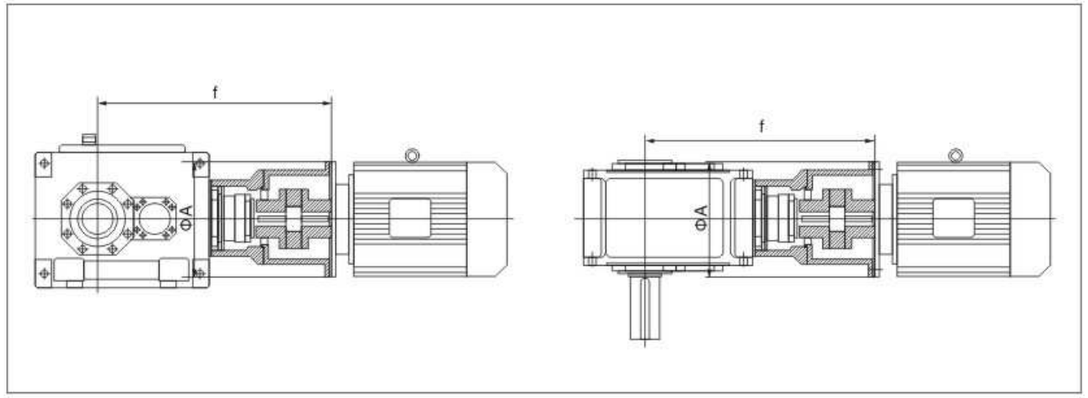

电机功率 Motor Powe	B2.. 规格 / size 4 f	4 A	5 f	6 A	6 f	7 f	7 A	8 f
	mm							
11–15kW	708	350						
18.5–22kW	708	350						
30kW	710	400	790	400	825			
37–45kW			827	450	862	957	450	1002
55kW						957	550	1002
75–90kW						957	550	1002

电机功率 Motor Powe	B3.. 规格 / size 4 f	4 A	5 f	6 A	6 f	7 f	7 A	8 f	9 f	9 A	10 f	11 f	11 A	12 f
	mm													
2.2–4kW	648	250												
5.5–7.5kW	671	300	756	350	791									
11–15kW	713	350	788	350	823	933	400	978						
18.5–22kW	713	350	788	350	823	933	400	978	1053	420	1103			
30kW	715	400	780	400	825	935	400	980	1055	420	1105	1240	400	1310
37–45kW			827	450	862	972	450	1017	1092	450	1142	1277	450	1347
55kW						972	550	1017	1092	550	1142	1277	550	1347
75–90kW						972	550	1017	1092	550	1142	1277	550	1347

电机功率 Motor Powe	B4.. 规格 / size 5 f	5 A	6 f	6 f	7 A	7 f	8 f	9 f	10 A	10 f	11 f	12 A	12 f	13 f	13 A	14 f	15 f	16 A	17 f	17 f	18 A	18 f
	mm																					
2.2–4kW	753	250	780	873	250	918		350														
5.5–7.5kW	776	330	811	896	300	941	1021	350	1071													
11–15kW	818	350	853	938	350	983	1053	350	1003	1253	400	1323										
18.5–22kW	818	350	853	938	350	983	1053	400	1103	1253	400	1323	1423	420	1493							
30kW				940	400	985	1055	450	1105	1255	400	1325	1423	420	1493	1682	400	1728	1730	400	1790
37–45kW							1092		1142	1292	450	1362	1462	450	1532	1719	450	1765	1767	450	1827
55kW										1292	550	1362	1462	550	1532	1719	550	1765	1767	550	1827
75–90kW										1292	550	1362	1462	550	1532	1719	550	1765	1767	550	1827

*标准电机安装尺寸参见第111页。Fitting dimensions for standard motors see page 111.

标准普通电机的参数及安装尺寸
Standard and or dinary motor parameter and mounting dimension

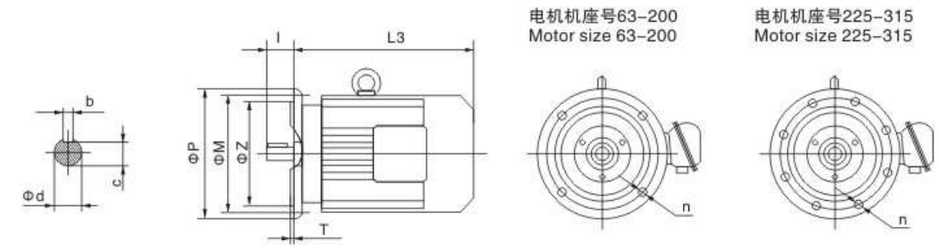

电机机座号 Motor size	4级 Class 4 P1 (kW)	4级 n1 (r/min)	6级 Class 6 P1 (kW)	6级 n1 (r/min)	8级 Class 8 P1 (kW)	8级 n1 (r/min)	L3 Y2	L3 B	L3 E	L3 V	安装尺寸 Mounting dimensions M	N	P	n	T	d	l	b	c	M(kg) Y (铝壳) Aluminium housing	Y2	B	E	V
63	0.12	1390					202	270	328		115	95j6	140	4×Φ10	3	11j6	23	4	8.5	5.5	13			11
	0.18	1390																		6	13.5	15		12
71	0.25	1390	0.18	850			225	285	345		130	110j6	160	4×Φ10	3.5	14j6	30	5	11	6.5	14	16	12	14
	0.37	1390	0.25	850																7.5	14.5	16	13	15
80	0.55	1390	0.37	885	0.18	645	255	290	350	310	165	130j6	200	4×Φ12	3.5	19j6	40	6	15.5	10	15	31	20	16
	0.75	1390	0.55	885	0.25	645														11	16	32	21	17
90S	1.1	1400	0.75	910	0.37	670	270	310	370	320	165	130j6	200	4×Φ12	3.5	24j6	50	8	20	16	23	35	27	23
90L	1.5	1400	1.1	910	0.55	670	295	335	395	345	165	130j6	200	4×Φ12	3.5	24j6	50	8	20	20	25	39	31	28
100	2.2	1420	1.5	920	0.75	680	325	370	420	370	215	180j6	250	4×Φ15	4	28j6	60	8	24		33	49	41	36
	3	1420			1.1	680															35	53	44	36
112M	4	1440	2.2	940	1.5	690	340	400	450	390	215	180j6	250	4×Φ15	4	28j6	60	8	24		41	67	60	43
132S	5.5	1440	3	960	2.2	710	390	430	505	450	265	230j6	300	4×Φ15	4	38k6	80	10	33		65	93	85	63
132M	7.5	1460	4	960	3	710	430	470	545	490	265	230j6	300	4×Φ15	4	38k6	80	10	33		76	105	98	75
			5.5	960																				
160M	11	1460	7.5	960	4	720	505	545	610	550	300	250h6	350	4×Φ19	5	42k6	110	12	37		118	150	143	116
					5.5	720																		
160L	15	1460	11	960	7.5	720	560	585	655	595	300	250h6	350	4×Φ19	5	42k6	110	12	37		132	169	165	136
180M	18.5	1470					590	620	715	740	300	250h6	350	4×Φ19	5	48k6	110	14	42.5		164	205	203	169
180L	22	1470	15	970	11	730	630	640	765	790	300	250h6	350	4×Φ19	5	48k6	110	14	42.5		182	222	216	183
200	30	1470	18.5	970	15	730	660	695	790	850	350	300h6	400	4×Φ19	5	55k6	110	16	49		245	300	296	236
			22	970																				
225S	37	1480			18.5	730	675	705	860	910	400	350h6	450	8×Φ19	5	60m6	140	18	53		258	360	370	291
225M	45	1480	30	980	22	730	705	730	890	940	400	350h6	450	8×Φ19	5	60m6	140	18	53		290	390	405	327
250	55	1480	37	980	30	730	770	795		1060	500	450h6	550	8×Φ19	5	65m6	140	18	58		388	530	498	393
280S	75	1480	45	980	37	730	845	870		1160	500	450h6	500	8×Φ19	5	75m6	140	20	67.5		510	660	633	520
280M	90	1485	55	980	45	740	895	920		1260	500	450h6	550	8×Φ19	5	75m6	140	20	67.5		606	785	723	610
315S	110	1485	75	980	55	740	1100	1100		1330	600	550h6	660	8×Φ19	6	80m6	170	22	71		910	1000	1150	950
315M	132	1485	90	985	75	740	1180	1180		1380	600	550h6	660	8×Φ19	6	80m6	170	22	71		1000	1100	1230	1030
315L	160	1485	110	985	90	740	1270	1270		1450	600	550h6	660	8×Φ24	6	80m6	170	22	71		1055	1100	1320	1100
	200	1485	132	985	110	740															1128	1160	1420	1200

注：由于结构需要及生产厂家不同，有时参数会有所变化，此表仅供参考，准确尺寸请来电垂询。
Note:Sometimes the parameters may be changed with the different structures and manufacturers, this table is only for reference, please refer to us for the exact dimensions.

目录
Contents

P系列行星齿轮减速机
P series planetary gearbox

产品概述/型号表示方法
Product Summary and Designation of Types

产品概述 Product summary

1) 采用模块化设计，可根据客户要求进行变化组合。
2) 箱体采用球墨铸铁，大大提高了箱体的刚性及抗震性。
3) 箱体内的太阳轮行星轮，内齿圈及螺旋锥齿轮均采用可控气氛渗碳火处理，得到高硬耐磨表面，热处理后全部磨齿，降低了噪音，提高了整机的效率及使用寿命。
4) 输入方式：同心轴输入，斜齿轮输入，锥齿轮-斜齿轮输入，锥齿轮输入。
5) 输出方式：内花键式，空心轴收缩盘式，外花键式，实心轴平键。
6) 安装形式：水平安装，垂直安装，扭力臂安装。
7) P系列产品有9-34型规格，行星传动级数有2级和3级，速比为25-4000，和CR、K、R系列组合可得到更大速比。

1) Adopt the module design; its match could vary from the customers' requirement.
2) The casting house could adopt the cast-iron QT, it could enhance the house rigidity and anti-shake.
3) The sun planetary gear inside the house, inner gear cycle, and screw-cone gear could adopt the controllable gas gear could gas gear could gasfire treatment way to get the high Hard wear – resistant surface, after it, getting the grind gear to lower the noise, and enhance the efficiency and life expectancy of whole unit.
4) Input mode: the concentric shaft input, helical gear input; cone-helical gear input, cone-gear input.
5) Output mode: inner spline, hollow shaft shrink, outer spline, solid shaft with the even key.
6) Assembly mode: Horizontal, vertical, toque arm.
7) P series product covers 9-34 type specification, the planetary gear has 2 and 3 stage, ratio range 25-4000 gear match with CR、K、 R series matched units could get the bigger ratio.

型号规格表示方法 Type formula

P 3 N A 18-140 / -Y / - F/ - 45 - B5 - 99

- P：P系列行星齿轮减速机 P series planetary gearbox
- 3：行星齿轮传动级数(2或3级) Planetary stage (2 or 3 stage)
- N：N、S、L、K；N 标准型(同心输入) S 斜齿轮级 L 锥齿轮级 K 锥齿-斜齿轮级；N: Standard (concentric input) S: Helical class L: Cone-gear K: Cone-helical gea
- A：A、B、C、D；A 带收缩盘空心输出轴 B 带平键的实心输出轴 C 带渐开线花键空心轴 D 带渐开线花键实心轴；A: With shrink disk hollow output shaft B: With even key solid output shaft C: With involute spline solid shaft D: With involute spline solid shaft.
- 18：机座号 Type No
- 140：公称减速比 Nominal ratio
- -Y：电机代号与级数 4级时不标明 Motor code and stages, and 4 stage is not mark.
- -F：法兰代号 Flange mode
- -45：电机功率 Motor power
- -B5：附件代号 Accessory code
- -99：安装方位 Assembly mode

选型及举例
Selection Table and Example

序号	说明	代号	参数计算							
1	被驱动设备系数	f1	查10页f1表							
2	原动机系数	f2	原动机系数							f2
			电机，液压马达，汽轮机							1.0
			4-6缸活塞发动机，周期变化1;100至1:200							1.25
			1-3缸活塞发动机，周期变化1:100							1.5
3	齿轮箱许用输入转速	N1	≤1500							
4	确定减速比	i	i=n1/n2							
5	确定齿轮箱类型选择传动效率	η	type	η	type	η				
			P2N	94%	P3N	92%				
			P2L	93%	P3S	91%				
			P2S	93%	P3K	89%				
			P2K	91%						
6	以被驱动设备所需的扭矩或功率，确定齿轮箱的输入功率	P1	P1=T2·n1/(9550·i·η)或P1=P2/η							
7	根据计数，查传动能力表，确定齿轮箱规格	T_{2N} P_{1N}	T2N≥T2·f1·f2或P1N≥P1·f1·f2 如果不满足条件：3.33·P1≥P1N，请向我们咨询。							
8	峰值扭矩校核*	T_A	P1N≥T_A·n1·f3/9550	f3	每小时峰值负荷次数					
					1-5	6-30	31-100	>100		
				单向载荷	0.5	0.65	0.7	0.85		
				交变载荷	0.7	0.95	1.10	1.25		
9	输出轴的径向力轴向力校核	Fr, Fa	查9页P系列Fr表							
10	计算功率利用率确定其系数	f_{14}	功率利用率 =P1/P1N·100% 确定其系数f14.	功率利用率	30%	40%	50%	60%	70%	80%	90%	100%
				F14	0.66	0.77	0.83	0.90	0.90	0.95	1.0	1.0
11	热容量校核	P_G	P1≤PG=PG1·f4·f14 若不能满足上式，则齿轮箱需外加补足冷却装置（根据工况要求，可采用冷却水冷却油，风冷等形式）	环境温度系数f4								
				环境温度	每小时工作周期(ED)百分比%							
					100	80	60	40	20			
				10℃	1.14	1.20	1.32	1.54	2.04			
				20℃	1.00	1.36	1.16	1.35	1.79			
				30℃	0.87	0.93	1.00	1.18	1.56			
				40℃	0.71	0.75	0.82	0.96	1.27			
				50℃	0.55	0.58	0.64	0.74	0.98			
12	确定润滑方式		V1, V3, V11, V31安装方位为浸油润滑; B51强制润滑; 其他安装方位为飞溅润滑为油泵							
13	根据输入，输出方式，安装方位等确定具体型号所需附件									

*峰值扭矩：最大负载扭矩，是指启动，制动或最大脉动载荷所引起的最大扭矩。（一般工况条件下峰值扭矩为启动或制动时的最大扭矩）

选型及举例
Selection Table and Example

No	Statements	Code	Parameters calculation
1	Coefficient of driven machine	f1	10 page and table f1
2	Prime motor coefficient	f2	Prime motor coefficient: f2 Motor, hydraulic motor, turbine: 1.0 4–6 jar piston engine, cycle change 1:100 to 1:200: 1.25 1–3 jar piston engine, cycle change 1:100: 1.5
3	Gear permissible coefficient	N1	≤1500
4	Gear ratio	i	i=n1/n2
5	Confirm the gear units type And select transmission efficiency	η	type / η / type / η P2N 94% P3N 92% P2L 93% P3S 91% P2S 93% P3K 89% P2K 91%
6	Select the gear units input power according To the driving machine torque	P1	P1=T2 · n1/(9550 · i · η) or P1=P2/η
7	According to the counts, Match the transmission capacity table. Then select the type,	T_{2N} P_{1N}	T2N≥T2 · f1 · f2 or P1N≥P1 · f1 · f2 If the conditions are not satisfied: 3.33 · P1≥P1N, please contact us.
8	Peak torque calibration*	T_A	P1N≥T_A · n1 · f3/9550 f3 — Peak load times per hour: 1–5 / 6–30 / 31–100 / >100 Single load. 0.5 / 0.65 / 0.7 / 0.85 Alternate load 0.7 / 0.95 / 1.10 / 1.25
9	Output shaft radial force, and axial calibration	Fr, Fa	Check 9 page P series Fr table.
10	Calculate the power usage rate and confirm the factor	f_{14}	Power usage rate =P1/P1N · 100% Determine the coefficient: f14 Power usage rate: 30% 40% 50% 60% 70% 80% 90% 100% F14: 0.66 0.77 0.83 0.90 0.90 0.95 1.0 1.0
11	Thermal capacity calibration	P_G	P1≤PG=PG1 · f4 · f14 Gearbox need to add the oil cooling, select the water cooling, oil cooling, and wind cooling form according to service facto F4 environment Environment temperature / Work cycle percentage per hour: 100 / 80 / 60 / 40 / 20 10℃: 1.14 1.20 1.32 1.54 2.04 20℃: 1.00 1.36 1.16 1.35 1.79 30℃: 0.87 0.93 1.00 1.18 1.56 40℃: 0.71 0.75 0.82 0.96 1.27 50℃: 0.55 0.58 0.64 0.74 0.98
12	Fabrication mode		V1, V3, V11, V31 assembly mode is oil–soaked fabrication. B51 forced fabrication, other mode is splash fabrication, oil pump.
13	Select the matched type accessory according to the input, output mode, and assembly mode.		

* Peak torque the maximum load torque, is the maximum torque when it starts, brakes, and maximum impulses.

选型举例
Selection Example

输送设备，输入转速为1000r/min，最大起动扭矩为2000N · m，输出转速为12.5r/min，输出扭矩为68000N · m，每天工作12h，负载持续率为60%，环境温度为0~20℃，大车间安装，风速约为5m/s，海拔高度为1000m以下，水平式法兰安装，偏心平行轴输入、输出、双轴型、实心轴普通平键输出。

Output equipment, input speed is 1000r/min, the maximum start torque is 2000N.m, the output speed 12.5r/min, output torque is 68000N.m, 12h per day, load efficiency is 60%, the environment temperature is 0~20 Celsius degree, big working room, wind speed is 5m/s, the height is below 100m, horizontal assembly, concentric parallel shaft input, output double shaft, the solid shaft common even output

解答:
f1=1.5
f2=1
n1=1000
i=1000/12.5=80

根据速比及输入，输出轴要求可选P2S型
η=0.93
P1=T2 · n 1(9500 · i · n)
=68000 × 1000/(9550 × 80 × 0.93)=95.7kW
T2N≥T2 × f1 × f2=68000N · m × 1.5 × 1=102kM · m
P1N≥P1 × f1 × f2=96.7 × 1.5 x i=143.55kW
初选P2SB14–80–B5–99
其P1N=153KW PG1=94KW iex=78. 827

校核:
3.33 × P2≥P1N
3.33 × 95.7=318.681KW > P1N满足要求。

峰值扭矩校核:
P1N=153KW≥TA · N1 · f3/9550
=2000 × 1000 × 0.5/9550=104.71kW满足要求。

热容量校核:
公称功率利用率=P1/P1N=95.7/153=0.625=62.5%
查P系列选型表得f14=0.9f4=1.16
PG1 × f4 × f14=94 × 1.16 × 0.9=100.32KW > P1
因此无须外加辅助冷却装置就可满足设备要求。
根据设备要求，安装方位为B5

润滑方式:
飞溅润滑

选定型号为: P2SB14–80–B5–99

Answer:
f1=1.5
f2=1
n1=1000
i=1000/12.5=80

According to the ratio, input and output shaft requirement, select the P2S
η=0.93
P1=T2 · n 1(9500 · i · n)
=68000 × 1000/(9550 × 80 × 0.93)=95.7kW
T2N≥T2 × f1 × f2=68000N · m × 1.5 × 1=102kM · m
P1N≥P1 × f1 × f2=96.7 × 1.5 x i=143.55kW
First select: P2SB14–80–B5–99
P1N=153KW PG1=94KW iex=78. 827

Calibration: 3.33 × P2≥P1N
3.33 × 95.7=318.681KW > P1N It meets the requirement.

Peak load calibration:
P1N=153KW≥TA · N1 · f3/9550
=2000 × 1000 × 0.5/9550=104.71kW. It meets the requirement.

Thermal calibration:
Nominal power usage rate=P1/P1N=95.7/153=0.625=62.5%
Check P series table: f14=0.9f4=1.16
PG1 × f4 × f14=94 × 1.16 × 0.9=100.32KW > P1
So it is not necessary to add the oil cooling , it could meet the requirement.
Select the B5 assembly mode

Fabrication mode: Splash fabrication.

So the final type: P2SB14–80–B5–99

符号说明
Symbol Description

ED=每小时工作周期，以百分比表示，如ED=60%
f1=被驱动设备系数
f2=原动机系数
f3=峰值扭矩系数
f4=环境温度系数
f14=设备功率利用率
PG1=不带辅助冷却装置的齿轮箱热容量
Fr2=允许径向力
P1N=减速机额定许用输入功率
TA=峰值扭矩，或者启动，制动时的最大扭矩

ED=working period for per hour, For example, ED=60%
f1=driven coefficient on equipment
f2=Prime mover coefficient
f3= peak torque coefficient
f4=ambient temperature coefficient
f14=device power utilization
PG1=gearbox heat capacity
Fr2=Allowable radial force
P1N= Rated allowable input power of gearbox
TA=Peak torque or the max torque when starting or braking

五、P系列Fr2(N)表 P series Fr2(N) table

N1 (r/min)	n_{2N}	i_N	Fr2(N)													
			9	10	11	12	13	14	16	17	18	19-20	21-22	23-24	25-26	27-28
1405	58.0	25	9538	23353	32518	42407	34737	41183	72297	64454	69713	70477	99136	99347	123583	126071
	51.8	28	9905	24252	33770	44039	36075	42768	75080	66935	72396	73190	102952	103171	128341	130925
	46.0	31.5	10302	25223	35122	45803	37519	44481	78086	69616	75295	76121	107075	107302	133480	136167
	40.8	35.5	10720	26249	36550	47665	39044	46289	81261	72446	78356	79215	111428	111665	138907	141703
	36.3	40	11155	27314	38033	49599	40629	48167	84559	75386	81536	82430	115950	116196	144544	147454
	32.2	45	11602	28408	39556	51585	42256	50096	87945	78404	84801	85731	120593	120849	150332	153358
	29.0	50	12017	29423	40970	53429	43766	51887	91088	81207	87832	88795	124903	125169	155705	258840
	25.9	56	12479	30556	42547	55486	45451	53884	94595	84333	91214	92214	129712	129988	161700	164955
	23.0	63	12979	31779	44251	57708	47271	56042	98383	87710	94866	95906	134906	135193	168175	171560
	20.4	71	13507	33071	46050	60054	49193	58320	102382	91276	98723	99805	140390	140689	175011	178534
	18.1	80	14055	34413	47919	62491	51189	60687	106537	94980	102729	103856	146088	146398	182114	185780
	16.1	90	14618	35791	49838	64993	53239	63117	110803	98783	106843	108014	151937	152260	189406	193219
	14.5	100	15140	37071	51619	67316	55142	65373	114764	102314	110662	111875	157368	157703	196176	200125
	12.9	112	15723	38498	53606	69908	57265	67890	119182	106253	114922	116182	163427	163774	203729	207830
	11.6	125	16309	39933	55605	72514	59400	70421	123626	110215	119207	120514	169520	169880	211325	215578
	10.4	140	16937	41471	57746	75306	61687	73132	128385	114458	123796	125153	176046	176420	219460	223878

备注: 各规格更低的输出转速按以上最大的Fr2值。
Remark: Much lower output speed of different specification is based on the max Fr2.

被驱动设备系列f1
Driven Coefficient on Equipment f1

被驱动设备系数				f1			
工作机	日带载运行时间(小时) 0. 5	>0. 5-10	>10	工作机	日带载运行时间(小时) 0. 5	>0. 5-10	>10
污水处理				**输送机械**			
浓缩器(中心转动)	-	-	1.2	斗式输送机	-	1.4	1.5
压滤器	1.0	1.3	1.5	绞车	1.4	1.6	1.6
絮凝器	0.8	1.0	1.3	卷扬机	-	1.5	1.8
曝气机	-	1.8	2.0	皮带输送机≤150KW	1.0	1.2	1.3
搂集设备	1.0	1.2	1.3	皮带输送机≥150KW	1.1	1.3	1.4
纵向,回转组合式接集装置	1.0	1.3	1.5	货用电梯*	-	1.2	1.5
浓缩器	-	1.1	1.3	客用电梯*	-	1.5	1.8
螺杆泵	-	1.3	1.5	刮板式输送机	-	1.2	1.5
水轮机	-	-	2.0	自动扶梯	1.0	1.2	1.4
泵				轨道行走机构	-	1.5	-
离心泵	1.0	1.2	1.3	**变频装置**	-	1.8	2.0
溶积式泵				**往复式压缩机**	-	1.8	1.9
1个活塞	1.3	1.4	1.8				
>1个活塞	1.2	1.4	1.5				
挖泥机				**起重机械****			
斗式运输机	-	1.6	1.6	回转机构*	1.0	1.4	1.8
倾卸装置	-	1.3	1.5	俯仰机构	1.0	1.1	1.4
Cartepillar行走机构	1.2	1.6	1.8	行走机构	1.1	1.6	2.0
斗式挖掘机				提升机构	1.0	1.1	1.4
用于捡拾	-	1.7	1.7	转臂式起重机	1.0	1.2	1.6
用于粗料	-	2.2	2.2	**冷却塔**			
切碎机	-	2.2	2.2	冷却塔风扇	-	-	2.0
行走机构*	-	2.4	1.8	风机(轴流和离心式)	-	1.4	1.5
弯板机	-	1.0	1.0	**食品工业**			
化学工业				蔗糖生产			
挤压机	-	-	1.6	甘蔗切碎机	-	-	1.7
调浆机	-	1.8	1.8	甘蔗碾磨机	-	-	1.7
橡胶砑光机	-	1.5	1.5	甜菜糖生产			
冷却圆筒	-	1.3	1.4	甜菜绞碎机	-	-	1.2
混料机,用于				榨取机,机械致冷机,蒸煮机	-	-	1.4
均匀介质	1.0	1.3	1.4	甜菜清洗机			
非均匀介质	1.4	1.6	1.7	甜菜切碎机	-	-	1.5
搅拌机,用于				**造纸机械**			
密度均匀介质	1.0	1.3	1.5	各种类型***	-	1.8	2.0
不均匀介质	1.2	1.4	1.6	碎浆机驱动装置			
不均匀气体吸收	1.4	1.6	1.8	**离心式压缩机**	-	1.4	1.5
烘炉	1.0	1.3	1.5				
离心机	1.0	1.2	1.3				
金属加工设备				**索道缆车**			
翻板机	1.0	1.0	1.2	运货索道	-	1.3	1.4
推钢机	1.0	1.2	1.2	往返系统空中索道	-	1.6	1.8
绕线机	-	1.6	1.6	T型杆升降机	-	1.3	1.4
冷床横移架	-	1.5	1.5	连续索道	-	1.4	1.6
辊式矫直机	-	1.6	1.6	**水泥工业**			
辊道				混泥土搅拌器	-	1.5	1.5
连续式	-	1.5	1.5	破碎机*	-	1.2	1.4
间歇式	-	2.0	2.0	回转窑	-	-	2.0
可逆式扎管机	-	1.8	1.8	管式磨机	-	-	2.0
剪切机				选粉机	-	1.6	1.6
连续式*	-	1.5	1.5	辊压机	-	-	2.0
曲柄式*	1.0	1.0	1.0				
连铸机驱动装置	-	1.4	1.4				
轧机							
可逆式开坯机	-	2.5	2.5				
可逆式板坯轧机	-	2.5	2.5				
可逆式线材轧机	-	1.8	1.8				
可逆式中厚板轧机	-	2.0	2.0				
辊缝调节驱动装置	-	1.8	1.8				
	0.9	1.0	-				

1. 工作机额定功率P2的确定:
   *)按最大的扭矩确定额定功率
   **)可交载荷准确得分类.
   ***)检验热容量是绝对必要的
2. 所列各项系数均为经验值,使用这些系数的前提条件是,所述机械设备符合通常的设计规范和载荷条件.如遇特殊情况,请及时与我们取得联系.
3. 对于那些为列入此表的工作机械,请与我们联系.

被驱动设备系列f1
Driven Coefficient on Equipment f1

Driven coefficient on equipment							f1
Working machine	Day running time With load(hours) 0. 5	>0. 5-10	>10	Working machine	Day running time With load(hours) 0. 5	>0. 5-10	>10
Sewage treatment machinery				**Transportation**			
Thickener(rotation in center)	-	-	1.2	Bucket conveyor	-	1.4	1.5
Filter Press	1.0	1.3	1.5	Winch	1.4	1.6	1.6
Flocculator	0.8	1.0	1.3	conveyors Hoist	-	1.5	1.8
Aerator	-	1.8	2.0	conveyors≥150kw	1.0	1.2	1.3
Raking equipment	1.0	1.2	1.3	Freight elevator*	1.1	1.3	1.4
Combined longitudinal and rotary rakes	1.0	1.3	1.5	Passenger elevator*	-	1.2	1.5
Thickener	-	1.1	1.3	Scraper conveyor	-	1.5	1.8
Screw pump	-	1.3	1.5	Esalator	-	1.2	1.5
Turbine	-	-	2.0	Track running gear	1.0	1.2	1.4
Pump					-	1.5	-
Centrfugal pump	1.0	1.2	1.3	**Frequency devices**	-	1.8	2.0
Dissolved integrand pump							
A piston	1.3	1.4	1.8	**Reciprocating compressors**	-	1.8	1.9
> A piston	1.2	1.4	1.5				
Dredge				**Lifting machinery****			
Bucket conveyor	-	1.6	1.6	Slewing mechanism*	1.0	1.4	1.8
dump device	-	1.3	1.5	Tilt mechanism	1.0	1.1	1.4
Cartepillar Walking structure	1.2	1.6	1.8	Walking structure	1.1	1.6	2.0
Bucket excavator				Lifting structure	1.0	1.1	1.4
For picking	-	1.7	1.7	Jib crane	1.0	1.2	1.6
For coarse material	-	2.2	2.2	**Cooling tower**			
Shredder	-	2.2	2.2	Cooling tower fan	-	-	2.0
Walking structure*	-	2.4	1.8	Fans (Axial and Centrifugal)	-	1.4	1.5
Plate bending machine	-	1.0	1.0	**Food Industry**			
				Sugar industry			
Chemical Industry				Sugarcane shredder	-	-	1.7
Extruder	-	-	1.6	Sugarcane grinders	-	-	1.7
paste mixer	-	1.8	1.8	Beet sugar production			
Rubber-ray machine	-	1.5	1.5	Beet pulpier	-	-	1.2
Cooling cylinder	-	1.3	1.4	Squeeze Machine, Mechanical actuator			
Mixer				Cold machine, cooking machine	-	-	1.4
For Homogeneous medium	1.0	1.3	1.4	Beet washing machine			
Inhomogeneous media	1.4	1.6	1.7	Beet shredder	-	-	1.5
Blender							
For Homogeneous medium density	1.0	1.3	1.5	**Paper Machinery**			
Inhomogeneous medium	1.2	1.4	1.6	All types***	-	1.8	2.0
Uneven gas absorption	1.4	1.6	1.8	The pulpier driver device			
Ovens	1.0	1.3	1.5				
Centrifuge	1.0	1.2	1.3	**Centrifugal Compressor**	-	1.4	1.5
Metal processing equipment				**Funicular**			
A replica machine	1.0	1.0	1.2	Freight cableway	-	1.3	1.4
Pusher	1.0	1.2	1.2	Back and forth system cableway	-	1.6	1.8
Winding machine	-	1.6	1.6	T-bar lift	-	1.3	1.4
Cooling bed traverse frame	-	1.5	1.5	Continuous cableway	-	1.4	1.6
Roller leveler	-	1.6	1.6				
Roller							
Continuous	-	1.5	1.5				
Gap-type	-	2.0	2.0				
Reversible pipe rolling mill	-	1.8	1.8	**Cement Industry**			
Shears							
Continuous*	-	1.5	1.5	Concrete agitator	-	1.5	1.5
Crank type*	1.0	1.0	1.0	Crusher*	-	1.2	1.4
The Continuous Casting chicken drive device	-	1.4	1.4	Rotary kiln	-	-	2.0
Mill	-	2.5	2.5	Tube mill	-	-	2.0
Reversible open-Pei machine	-	2.5	2.5	Made powder machine	-	1.6	1.6
The reversible plate Pei mill	-	1.8	1.8	Roller press	-	-	2.0
Reversible wire rod mill	-	2.0	2.0				
Reversing plate mill	-	1.8	1.8				
Roll gap adjustment drive	0.9	1.0	-				

1. The confirmation of rated power of working machine-P2:
*) According to max torque to confirm the rated power;
**) According to Cross-load to classify;
***) Inspection heat capacity is absolutely necessary.
2. All the listed the various coefficients are empirical value, the prerequisite for using these coefficients is the mechanical equipment in line with the usual design specifications and load conditions, if in special circumstances, please contact us.
3. Machinery is for those which not listed in this table, please contact us.

传动能力表
Selection Table

1. P2N和P2S传动能力表:(i=25 ~125) P2N and P2S selection table:(i=25~125)

n_1 (r/min)	n_{2N} (r/min)	i_N	P2-9			P2-10			P2-11			P2-12			P2-13			P2-14		
			T_{2N} (kN·m)	i_{ex}	P_{1N} (kW)	T_{2N} (kN·m)	i_{ex}	P_{1N} (kW)	T_{2N} (kN·m)	i_{ex}	P_{1N} (kW)	T_{2N} (kN·m)	i_{ex}	P_{1N} (kW)	T_{2N} (kN·m)	i_{ex}	P_{1N} (kW)	T_{2N} (kN·m)	i_{ex}	P_{1N} (kW)
1500	60				137			193			261			373			516			728
1000	40	25	22	25.634	91	31	25.634	129	42	25.875	174	60	24.983	249	83	24.958	344	117	24.958	485
750	30				68			96			131			187			258			364
1500	54				123			173			235			336			465			655
1000	36	28	22	28.058	82	31	28.058	116	42	28.233	157	60	27.26	224	83	27.318	310	117	27.318	437
750	27				62			87			118			168			232			327
1500	48				109			154			209			298			412			582
1000	32	31.5	22	31.142	73	31	31.142	103	42	31.207	139	60	30.13	199	83	30.321	275	117	30.321	388
750	24				55			77			104			149			206			291
1500	42				96			135			183			261			361			509
1000	28	35.5	22	35.201	64	31	35.201	90	42	35.072	122	60	33.863	174	83	34.272	241	117	34.272	340
750	21				48			67			91			131			181			255
1500	38				87			122			165			236			327			461
1000	25	40	22	40.781	57	31	40.781	80	42	40.302	109	60	38.912	155	83	39.706	215	117	39.706	303
750	19				43			61			83			118			163			230
1500	33.3				77			108			147			209			290			408
1000	22.2	45	22	45.601	51	31	45.601	72	42	43.209	98	60	41.719	140	83	43.797	193	117	43.797	272
750	16.7				38			54			73			105			145			204
1500	30.0				69			97			132			188			261			368
1000	20.0	50	22	51.544	46	31	51.544	65	42	48.561	88	60	46.887	126	83	49.505	174	117	49.505	245
750	15.0				35			49			66			94			130			184
1500	26.8				62			87			118			168			233			238
1000	17.9	56	22	59.715	41	31	59.715	58	42	55.802	79	60	53.878	112	83	57.353	155	117	57.353	219
750	13.4				31			43			59			84			116			164
1500	23.8				55			77			105			150			207			292
1000	15.9	63	22	61.953	37	31	61.953	52	42	63.399	70	60	61.213	100	83	59.977	138	117	59.977	194
750	11.9				27			39			52			75			103			146
1500	21.1				49			69			93			133			184			259
1000	14.1	71	22	71.775	32	31	71.775	46	42	72.853	62	60	70.34	88	83	69.485	122	117	69.485	173
750	10.6				24			34			46			66			92			129
1500	18.8				43			61			82			118			163			230
1000	12.5	80	22	78.782	29	31	78.782	41	42	81.303	50	60	78.499	79	83	78.827	109	117	78.827	153
750	9.4				22			30			41			59			81			115
1500	16.7				38			54			73			105			145			204
1000	11.1	90	22	91.272	26	31	91.272	36	42	93.426	49	60	90.205	70	83	91.324	97	117	91.324	136
750	8.3				19			27			37			52			72			102
1500	15.0				35			49			66			94			130			184
1000	10.0	100	22	99.735	23	31	99.735	32	42	99.678	44	60	96.241	63	83	95.963	87	117	95.963	123
750	7.5				17			24			33			47			65			92
1500	13.4				31			43			59			84			116			164
1000	8.9	112	22	115.55	21	31	115.55	29	42	114.54	39	60	110.59	56	83	111.18	78	117	111.18	109
750	6.7				15			22			29			42			58			82
1500	12.0				28			39			53			75			104			147
1000	8.0	125	22	124.74	18	31	124.74	26	42	123.14	35	60	118.9	50	83	119.12	70	117	119.12	98
750	6.0				14			19			26			38			52			74

传动能力表
Selection Table

P2N和P2S传动能力表:(i=25～125)(续前页)　P2N and P2S selection table:(i=25~125)

P2-16			P2-17			P2-18			P2-19			P2-20			P2-21			i_N	n_{2N} (r/min)	n_1 (r/min)
T_{2N} (kN·m)	i_{ex}	P_{1N} (kW)	T_{2N} (kN·m)	i_{ex}	P_{1N} (kW)	T_{2N} (kN·m)	i_{ex}	P_{1N} (kW)	T_{2N} (kN·m)	i_{ex}	P_{1N} (kW)	T_{2N} (kN·m)	i_{ex}	P_{1N} (kW)	T_{2N} (kN·m)	i_{ex}	P_{1N} (kW)			
		995			1256			1517			1834			2201					60	1500
160	24.75	663	202	24.75	837	244	24.958	1012	295	26.622	1223	354	26.622	1468	392	26.622	1625	25	40	1000
		497			628			759			917			1101			1219		30	750
		895			1131			1366			1651			1981					54	1500
160	27.09	597	202	27.09	754	244	27.318	910	295	29.139	1101	354	29.139	1321	392	29.139	1463	28	36	1000
		448			565			683			825			991			1097		27	750
		796			1005			1214			1468			1761			1950		48	1500
160	20.068	531	202	20.068	670	244	30.321	809	295	32.342	978	354	32.342	1174	392	32.342	1300	31.5	32	1000
		398			502			607			734			881			975		24	750
		696			879			1062			1284			1541			1706		42	1500
160	33.987	464	202	33.987	586	244	34.272	708	295	36.557	856	354	36.557	1027	392	36.557	1138	35.5	28	1000
		348			440			531			642			770			853		21	750
		630			796			961			1162			1394			1544		38	1500
160	39.375	415	202	39.375	523	244	39.706	632	295	42.353	764	354	42.353	917	392	42.353	1016	40	25	1000
		315			398			480			581			697			772		19	750
		558			705			852			1030			1236			1368		33.3	1500
160	42.318	372	202	42.318	470	244	42.867	568	295	45.725	686	354	45.725	824	392	46.357	912	45	22.2	1000
		279			353			426			515			618			684		16.7	750
		503			635			766			927			1112			1231		30.0	1500
160	47.833	335	202	47.833	423	244	48.454	511	295	51.684	618	354	51.684	741	392	52.399	821	50	20.0	1000
		251			317			383			463			556			616		15.0	750
		449			567			684			827			993			1099		26.8	1500
160	55.417	299	202	55.417	378	244	56.136	456	295	59.878	552	354	59.878	662	392	60.706	733	56	17.9	1000
		224			283			342			414			496			550		13.4	750
		399			504			608			735			883			977		23.8	1500
160	61.438	266	202	61.438	336	244	60.32	406	295	64.341	490	354	64.341	588	392	66.084	651	63	15.9	1000
		199			252			304			368			441			489		11.9	750
		354			447			540			653			783			867		21.1	1500
160	71.178	236	202	71.178	298	244	69.882	360	295	74.541	435	354	74.541	522	392	76.561	578	71	14.1	1000
		177			223			270			326			392			434		10.6	750
		314			397			479			579			695			770		18.8	1500
160	78.788	209	202	78.788	264	244	78.976	319	295	84.841	386	354	84.841	463	392	84.746	513	80	12.5	1000
		157			198			240			290			347			385		9.4	750
		279			353			426			515			618			684		16.7	1500
160	91.278	186	202	91.278	235	244	91.496	284	295	97.596	343	354	97.596	412	392	98.182	456	90	11.1	1000
		140			176			213			257			309			342		8.3	750
		251			317			383			463			556			616		15.0	1500
160	96.594	168	202	96.594	212	244	95.963	255	295	102.36	309	354	102.36	371	392	103.9	410	100	10.0	1000
		126			159			192			232			278			308		7.5	750
		224			283			342			414			496			550		13.4	1500
160	111.91	150	202	111.91	189	244	111.18	228	295	118.59	276	354	118.59	331	392	120.37	366	112	8.9	1000
		112			142			171			207			248			275		6.7	750
		201			254			307			371			445			493		12.0	1500
160	120.59	134	202	120.59	169	244	119.12	204	295	127.06	247	354	127.06	297	392	129.41	328	125	8.0	1000
		101			127			153			185			222			246		6.0	750

传动能力表
Selection Table

P2N和P2S传动能力表:(i=25～125)(续前页)　P2N and P2S selection table:(i=25~125)

n_1 (r/min)	n_{2N} (r/min)	i_N	P2-22			P2-23			P2-24			P2-25			P2-26			P2-27		
			T_{2N} (kN·m)	i_{ex}	P_{1N} (kW)	T_{2N} (kN·m)	i_{ex}	P_{1N} (kW)	T_{2N} (kN·m)	i_{ex}	P_{1N} (kW)	T_{2N} (kN·m)	i_{ex}	P_{1N} (kW)	T_{2N} (kN·m)	i_{ex}	P_{1N} (kW)	T_{2N} (kN·m)	i_{ex}	P_{1N} (kW)
1500	60																			
1000	40	25	450	26.622	1866	513	26.872	2127	592	26.872	2454	684	26.872	2863	763	26.872	3163	852	26.622	3532
750	30				1399			1595			1841			2127			2372			2649
1500	54																			
1000	36	28	450	29.139	1679	513	29.321	1914	592	29.321	2209	684	29.321	2552	763	29.321	2847	852	29.139	3179
750	27				1259			1436			1657			1914			2135			2384
1500	48				2239			2552			2945			3403			3796			4238
1000	32	31.5	450	32.342	1492	513	32.409	1701	592	32.409	1963	684	32.409	2268	763	32.409	2530	852	32.342	2826
750	24				1119			1276			1473			1701			1898			2129
1500	42				1959			2233			2577			2977			3821			3709
1000	28	35.5	450	36.557	1306	513	36.424	1489	592	36.424	1718	684	36.424	1985	763	36.424	2214	852	36.557	2472
750	21				979			1117			1288			1489			1661			1854
1500	38				1772			2020			2331			2694			3005			3855
1000	25	40	450	42.353	1166	513	41.855	1329	592	41.855	1534	684	41.855	1772	763	41.855	1977	852	42.353	2208
750	19				886			1010			1166			1347			1502			1678
1500	33.3				1571			1790			2066			2387			2663			
1000	22.2	45	450	46.357	1047	513	45.373	1194	592	45.373	1377	684	45.373	1592	763	45.373	1775	852	46.948	1982
750	16.7				785			895			1033			1194			1332			1487
1500	30.0				1414			1611			1860			2149			2397			
1000	20.0	50	450	52.399	942	513	50.993	1074	592	50.993	1240	684	50.993	1432	763	50.993	1598	852	53.067	1784
750	15.0				707			806			930			1074			1198			1338
1500	26.8				1262			1439			1660			1918			2140			
1000	17.9	56	450	60.706	841	513	58.597	959	592	58.597	1107	684	58.597	1279	763	58.597	1427	852	61.48	1593
750	13.4				631			719			830			959			1070			1195
1500	23.8				1122			1279			1476			1705			1902			
1000	15.9	63	450	66.084	748	513	64.442	853	592	64.442	984	684	64.442	1137	763	64.442	1268	852	66.345	1416
750	11.9				561			639			738			853			951			1062
1500	21.1				995			1135			1310			1513			1688			
1000	14.1	71	450	76.561	664	513	74.051	757	592	74.051	873	684	74.051	1009	763	74.051	1125	852	76.863	1256
750	10.6				498			567			655			757			844			942
1500	18.8				883			1007			1162			1343			1498			
1000	12.5	80	450	84.746	589	513	82.781	671	592	82.781	775	684	82.781	895	763	82.781	999	852	84.241	1115
750	9.4				442			504			581			671			749			886
1500	16.7				785			895			1033			1194			1332			
1000	11.1	90	450	98.182	524	513	95.124	597	592	95.124	689	684	95.124	796	763	95.124	888	852	97.596	991
750	8.3				393			448			517			597			666			743
1500	15.0				707			806			930			1074			1198			
1000	10.0	100	450	103.9	471	513	101.6	537	592	101.6	620	684	101.6	716	763	101.6	799	852	102.36	892
750	7.5				353			403			465			537			599			669
1500	13.4				631			719			830			959			1070			
1000	8.9	112	450	120.37	421	513	116.75	480	592	116.75	553	684	116.75	639	763	116.75	713	852	118.59	797
750	6.7				316			360			415			480			535			597
1500	12.0				565			645			744			859			959			
1000	8.0	125	450	129.41	377	513	125.56	430	592	125.56	496	684	125.56	573	763	125.56	639	852	127.06	714
750	6.0				283			322			372			430			479			535

传动能力表
Selection Table

P2N和P2S传动能力表:(i=25～125)(续前页)　P2N and P2S selection table:(i=25~125)

P2-28			P2-29			P2-30			P2-31			P2-32			P2-33			P2-34			i_N	n_{2N}	n_1
T_{2N} (kN·m)	i_{ex}	P_{1N} (kW)	T_{2N} (kN·m)	i_{ex}	P_{1N} (kW)	T_{2N} (kN·m)	i_{ex}	P_{1N} (kW)	T_{2N} (kN·m)	i_{ex}	P_{1N} (kW)	T_{2N} (kN·m)	i_{ex}	P_{1N} (kW)	T_{2N} (kN·m)	i_{ex}	P_{1N} (kW)	T_{2N} (kN·m)	i_{ex}	P_{1N} (kW)		(r/min)	(r/min)
																						60	1500
950	26.622	3938	1060	26.622	4394	1200	26.622	4975	1330	26.872	5514	1500	26.872	6218	1680	26.622	6965	1920	26.622	7960	25	40	1000
		2954			3296			3731			4135			4664			5223			5970		30	750
																						54	1500
950	29.139	3544	1060	29.139	3955	1200	29.139	4477	1330	29.321	4962	1500	29.321	5597	1680	29.139	6268	1920	29.139	7164	28	36	1000
		2658			2966			3358			3722			4197			4701			5373		27	750
		4726			5273			5970			6616			7462			8358			9551		48	1500
950	32.342	3151	1060	32.342	3515	1200	32.342	3980	1330	32.409	4411	1500	32.409	4975	1680	32.342	5572	1920	32.342	6368	31.5	32	1000
		2363			2637			2985			3308			3731			4179			4776		24	750
		4135			4614			5223			5789			6529			7313			8385		42	1500
950	36.557	2757	1060	36.557	3076	1200	36.557	3482	1330	36.424	3860	1500	36.424	4353	1680	36.557	4875	1920	36.557	5572	35.5	28	1000
		2068			2307			2612			2895			3265			3656			4179		21	750
		3741			4175			4726			5238			5907			6616			7562		38	1500
950	42.353	2461	1060	42.353	2746	1200	42.353	3109	1330	41.855	3446	1500	41.855	3886	1680	42.353	4353	1920	42.353	4975	40	25	1000
		1871			2087			2363			2619			2954			3308			3781		19	750
																						33.3	1500
950	46.948	2210	1060	46.948	2466	1200	46.948	2792	1330	45.575	3095	1500	45.575	3490	1680	45.481	3909	1920	45.481	4467	45	22.2	1000
		1658			1850			2094			2321			2618			2932			3351		16.7	750
																						30.0	1500
950	53.067	1989	1060	53.067	2220	1200	53.067	2513	1330	51.221	2785	1500	51.221	3141	1680	51.409	3518	1920	51.409	4021	50	20.0	1000
		1492			1665			1885			2089			2356			2639			3016		15.0	750
																						26.8	1500
950	61.48	1776	1060	61.48	1982	1200	61.48	2244	1330	58.858	2487	1500	58.858	2805	1680	59.559	3141	1920	59.559	3590	56	17.9	1000
		1332			1486			1683			1865			2103			2356			2692		13.4	750
																						23.8	1500
950	66.345	1579	1060	66.345	1762	1200	66.345	1994	1330	66.102	2210	1500	66.102	2493	1680	66.345	2792	1920	66.345	3191	63	15.9	1000
		1184			1321			1496			1658			1870			2094			2393		11.9	750
																						21.1	1500
950	76.863	1401	1060	76.863	1563	1200	76.863	1770	1330	75.958	1961	1500	75.958	2212	1680	76.863	2478	1920	76.863	2831	71	14.1	1000
		1051			1172			1327			1471			1659			1858			2124		10.6	750
																						18.8	1500
950	84.241	1243	1060	84.241	1387	1200	84.241	1571	1330	83.932	1741	1500	83.932	1963	1680	84.241	2199	1920	84.241	2513	80	12.5	1000
		933			1041			1178			1306			1472			1649			1885		9.4	750
																						16.7	1500
950	97.596	1105	1060	97.596	1233	1200	97.596	1396	1330	96.448	1547	1500	96.448	1745	1680	97.596	1954	1920	97.596	2234	90	11.1	1000
		829			925			1047			1160			1309			1466			1675		8.3	750
																						15.0	1500
950	102.36	995	1060	102.36	1110	1200	102.36	1256	1330	104.3	1393	1500	104.3	1571	1680	104.69	1759	1920	104.69	2010	100	10.0	1000
		746			832			942			1044			1178			1319			1508		7.5	750
																						13.4	1500
950	118.59	888	1060	118.59	991	1200	118.59	1122	1330	119.96	1243	1500	119.96	1402	1680	121.28	1571	1920	121.28	1795	112	8.9	1000
		666			743			841			933			1052			1178			1346		6.7	750
																						12.0	1500
950	127.06	796	1060	127.06	888	1200	127.06	1005	1330	127.56	1114	1500	127.56	1256	1680	129.08	1407	1920	129.08	1608	125	8.0	1000
		597			666			754			836			942			1055			1206		6.0	750

传动能力表
Selection Table

2. P3N和P3S传动能力表:(i=140～900)　P3N and P3S selection table: (i=140~900)

n_1 (r/min)	n_{2N} (r/min)	i_N	P3-9			P3-10			P3-11			P3-12			P3-13			P3-14		
			T_{2N} (kN·m)	i_{ex}	P_{1N} (kW)	T_{2N} (kN·m)	i_{ex}	P_{1N} (kW)	T_{2N} (kN·m)	i_{ex}	P_{1N} (kW)	T_{2N} (kN·m)	i_{ex}	P_{1N} (kW)	T_{2N} (kN·m)	i_{ex}	P_{1N} (kW)	T_{2N} (kN·m)	i_{ex}	P_{1N} (kW)
1500	10.7				24.8			34.9			47.3			68			94			132
1000	7.1	140	22	146.81	16.5	31	146.81	23.3	42	147.12	31.5	60	142.04	45	83	142.94	62	117	142.94	88
750	5.4				12.4			17.5			23.7			34			47			66
1500	9.4				21.7			30.6			41.4			59			82			115
1000	6.3	160	22	165.95	14.5	31	165.95	20.4	42	165.34	27.6	60	159.64	39	83	161.57	55	117	161.57	77
750	4.7				10.8			15.3			20.7			30			41			58
1500	8.3				19.3			27.2			36.8			53			73			103
1000	5.6	180	22	192.25	12.9	31	192.25	18.1	42	189.99	24.5	60	183.44	35	83	187.19	48	117	187.19	68
750	4.2				9.6			13.6			18.4			26			36			51
1500	7.5				17.3			24.4			33.1			47			65			92
1000	5.0	200	22	210.43	11.6	31	210.43	16.3	42	207.96	22.1	60	200.79	32	83	204.88	44	117	204.88	62
750	3.8				8.7			12.2			16.6			24			83			46
1500	6.7				15.4			21.7			29.4			42			58			82
1000	4.4	225	22	233.57	10.3	31	233.57	14.5	42	230.82	19.6	60	222.86	28	83	227.41	39	117	227.41	55
750	3.3				7.7			10.9			14.7			21			29			41
1500	6.0				13.9			19.6			26.5			38			52			74
1000	4.0	250	22	264.01	9.3	31	264.01	13.0	42	260.9	17.7	60	251.90	25	83	257.04	35	117	257.04	49
750	3.0				6.9			9.8			13.2			19			26			37
1500	5.4				12.4			17.5			23.7			34			47			66
1000	3.6	280	22	305.86	8.3	31	305.86	11.6	42	302.26	15.8	60	291.84	23	83	297.79	31	117	297.79	44
750	2.7				6.2			8.7			11.8			17			23			33
1500	5.4				13.5			17.6			24			34			47			67
1000	3.6	280	22	295.21	8.3	31	295.21	12	42	295.82	16	60	285.62	23	83	287.42	31	117	287.42	44
750	2.7				6.3			8.8			12			17			24			33
1500	4.8				11			16			21			30			42			59
1000	3.2	315	22	333.68	7.4	31	333.68	10.5	42	332.46	14	60	320.99	20	83	324.88	28	117	324.88	39
750	2.4				5.6			7.8			11			15			21			30
1500	4.2				10			14			19			27			37			53
1000	2.8	355	22	386.58	6.7	31	386.58	9.3	42	382.03	13	60	368.86	18	83	376.39	25	117	376.39	35
750	2.1				5			7			9			13			19			26
1500	3.8				8.8			12.4			17			24			33			47
1000	2.5	400	22	401.07	5.8	31	401.07	8.2	42	399.60	11	60	385.82	16	83	390.49	22	117	390.49	31
750	1.9				4.4			6.2			8			12			17			23
1500	3.3				7.8			11			15			21			29			41
1000	2.2	450	22	464.65	5.2	31	464.65	7.3	42	459.18	10	60	443.35	14	83	452.4	20	117	452.4	28
750	1.7				3.4			5.5			7.4			11			15			21
1500	3.0				7			10			13.4			9			26			37
1000	2.0	500	22	510.01	4.7	31	510.01	6.6	42	508.15	8.9	60	490.62	13	83	496.56	18	117	496.56	25
750	1.5				3.5			5			6.7			10			13			19
1500	2.7				6.3			8.8			12			17			24			33
1000	1.8	560	22	590.87	4.2	31	590.87	6	42	583.92	8	60	563.78	11	83	575.29	16	117	575.29	22
750	1.3				3.1			4.4			6			9			12			17
1500	2.4				5.6			7.8			10.6			15			21			30
1000	1.6	630	22	645.65	3.7	31	645.65	5.2	42	643.29	7	60	621.11	10	83	628.63	14	117	628.63	20
750	1.2				2.8			3.9			5.3			8			10			15
1500	2.1				4.5			7			9.4			13			19			26
1000	1.4	710	22	748.01	3.3	31	748.01	4.5	42	739.21	6.3	60	713.72	9	83	728.29	12	117	728.29	18
750	1.1				2.5			3.5			4.7			7			9			13
1500	1.9				4.4			6.2			8.4			12			17			23
1000	1.3	800	22	807.55	2.9	31	807.55	4.1	42	798.04	5.6	60	770.53	8	83	786.25	11	117	786.25	16
750	0.9				2.2			3.1			4.2			6			8			12
1500	1.7				3.4			5.5			7.4			11			15			21
1000	1.1	900	22	935.57	2.6	31	935.57	3.7	42	924.56	5	60	892.68	7	83	910.90	10	117	910.90	14
750	0.8				1.9			2.7			3.7			5			7			10

传动能力表
Selection Table

P3N和P3S传动能力表:(i=140～900)(续前页)　P3N and P3S selection table: (i=140~900)

P3-16			P3-17			P3-18			P3-19			P3-20			P3-21			i_N	n_{2N} (r/min)	n_1 (r/min)
T_{2N} (kN·m)	i_{ex}	P_{1N} (kW)	T_{2N} (kN·m)	i_{ex}	P_{1N} (kW)	T_{2N} (kN·m)	i_{ex}	P_{1N} (kW)	T_{2N} (kN·m)	i_{ex}	P_{1N} (kW)	T_{2N} (kN·m)	i_{ex}	P_{1N} (kW)	T_{2N} (kN·m)	i_{ex}	P_{1N} (kW)			
		180			228			275			332			399			442		10.7	1500
160	143.08	120	202	143.08	152	244	142.94	183	295	152.47	222	354	152.47	266	392	152.47	294	140	7.1	1000
		90			114			137			166			199			221		5.4	750
		158			199			241			291			349			386		9.4	1500
160	161.73	105	202	161.73	133	244	161.57	160	295	172.34	194	354	172.34	233	392	172.34	285	160	6.3	1000
		79			100			120			145			174			193		4.7	750
		140			177			214			258			310			343		8.3	1500
160	187.37	93	202	187.37	118	244	187.19	143	295	199.66	172	354	199.66	207	392	199.66	229	180	5.6	1000
		70			88			107			129			155			172		4.2	750
		126			159			192			233			279			309		7.5	1500
160	204.45	84	202	204.45	106	244	204.88	128	295	218.54	155	354	218.54	186	392	218.54	206	200	5.0	1000
		63			80			96			116			140			155		3.8	750
		112			142			171			207			284			275		6.7	1500
160	225.98	75	202	225.98	94	244	227.41	114	295	242.57	138	354	242.57	165	392	242.57	183	225	4.4	1000
		56			71			86			103			124			137		3.3	750
		101			127			154			186			223			247		6.0	1500
160	253.97	67	202	253.97	85	244	257.04	103	295	274.18	124	354	274.18	149	392	274.18	165	250	4.0	1000
		50			64			77			93			112			124		3.0	750
		90			114			137			166			199			221		5.4	1500
160	291.84	60	202	291.84	76	244	297.79	92	295	317.65	111	354	317.65	133	392	317.65	147	280	3.6	1000
		45			57			69			83			100			110		2.7	750
		91			115			139			168			202			223		5.4	1500
160	268.53	61	202	268.53	77	244	283.53	93	295	302.43	112	354	302.43	134	392	302.43	149	280	3.6	1000
		46			57			69			84			101			112		2.7	750
		81			102			123			149			179			198		4.8	1500
160	303.53	54	202	303.53	68	244	320.48	82	295	341.48	100	354	341.48	119	392	341.48	132	315	3.2	1000
		40			51			62			75			90			99		2.4	750
		72			91			110			132			159			176		4.2	1500
160	351.65	48	202	351.65	60	244	371.29	73	295	396.04	88	354	396.04	106	392	396.04	117	355	2.8	1000
		36			45			55			66			79			88		2.1	750
		64			80			97			118			141			156		3.8	1500
160	396.27	43	202	396.27	54	244	388.27	65	295	414.16	70	354	414.16	94	392	414.16	104	400	2.5	1000
		32			40			49			59			71			78		1.9	750
		57			72			86			104			125			139		3.3	1500
160	459.1	38	202	459.1	48	244	449.83	58	295	479.82	70	354	479.82	84	392	479.82	93	450	2.2	1000
		28			36			43			52			63			69		1.7	750
		51			64			78			94			113			125		3.0	1500
160	508.18	34	202	508.18	43	244	510.30	52	295	544.32	63	354	544.32	75	392	544.32	83	600	2.0	1000
		26			32			39			47			56			62		1.5	750
		46			57			69			84			101			112		2.7	1500
160	588.75	30	202	588.75	38	244	591.20	46	295	630.61	56	354	630.61	67	392	630.61	74	560	1.8	1000
		23			29			35			42			50			56		1.3	750
		40			51			62			75			90			99		2.4	1500
160	623.03	27	202	623.03	34	244	621.23	41	295	662.65	50	354	662.65	60	392	662.65	66	630	1.6	1000
		20			26			31			37			45			50		1.2	750
		36			45			55			66			79			88		2.1	1500
160	721.81	24	202	721.81	30	244	719.72	37	295	767.70	44	354	767.70	53	392	767.70	59	710	1.4	1000
		18			23			27			33			40			44		1.1	750
		32			40			49			59			71			78		1.9	1500
160	776.02	21	202	776.02	27	244	771.13	32	295	822.54	39	354	822.54	47	392	822.54	52	800	1.3	1000
		16			20			24			29			35			39		0.9	750
		28			36			49			52			63			69		1.7	1500
160	891.73	19	202	891.73	24	244	893.38	29	295	952.94	35	354	952.94	42	392	952.94	46	900	1.1	1000
		14			18			22			26			31			35		0.8	750

传动能力表
Selection Table

P3N和P3S传动能力表:(i=140～900)(续前页)　P3N and P3S selection table: (i=140~900)

n_1 (r/min)	n_{2N} (r/min)	i_N	P3-22			P3-23			P3-24			P3-25			P3-26			P3-27		
			T_{2N} (kN·m)	i_{ex}	P_{1N} (kW)	T_{2N} (kN·m)	i_{ex}	P_{1N} (kW)	T_{2N} (kN·m)	i_{ex}	P_{1N} (kW)	T_{2N} (kN·m)	i_{ex}	P_{1N} (kW)	T_{2N} (kN·m)	i_{ex}	P_{1N} (kW)	T_{2N} (kN·m)	i_{ex}	P_{1N} (kW)
1500	10.7				507			578			667			711			860			
1000	7.1	140	450	152.17	338	513	152.79	385	592	152.79	445	684	152.79	514	763	152.79	573	852	152.47	640
750	5.4				253			289			333			385			430			480
1500	9.4				444			506			584			674			753			
1000	6.3	160	450	172.34	296	513	171.71	337	592	171.71	389	684	171.71	450	763	171.71	501	852	172.34	560
750	4.7				222			253			292			337			376			420
1500	8.3				394			450			519			599			669			
1000	5.6	180	450	199.66	263	513	187.32	300	592	187.32	346	684	197.32	400	763	197.32	446	852	199.66	498
750	4.2				197			225			259			300			334			373
1500	7.5				355			405			467			539			602			
1000	5.0	200	450	218.54	237	513	215.97	270	592	215.97	311	684	215.97	360	763	215.97	401	852	218.54	448
750	3.8				177			202			233			270			301			336
1500	6.7				315			360			415			479			535			597
1000	4.4	225	450	242.57	210	513	239.71	240	592	239.71	277	684	239.71	320	763	239.71	357	852	242.57	398
750	3.3				158			180			207			240			267			299
1500	6.0				284			324			373			432			481			538
1000	4.0	250	450	274.18	189	513	270.95	216	592	270.95	249	684	270.95	288	763	270.95	321	852	274.18	358
750	3.0				142			162			187			216			241			269
1500	5.4				253			289			333			385			430			480
1000	3.6	280	450	317.65	269	513	313.91	193	592	313.91	222	684	313.91	257	763	313.91	287	852	317.65	320
750	2.7				127			144			167			193			215			240
1500	5.4				256			292			337			389			434			485
1000	3.6	280	450	302.43	171	513	295.28	195	592	295.28	225	684	295.28	260	763	295.28	290	852	296.01	323
750	2.7				128			146			168			195			217			242
1500	4.8				228			260			300			346			386			431
1000	3.2	315	450	341.48	152	513	331.86	173	592	331.86	200	684	331.86	231	763	331.86	257	852	334.59	287
750	2.4				114			130			150			173			193			216
1500	4.2				202			230			266			307			343			383
1000	2.8	355	450	396.04	135	513	381.34	154	592	381.34	177	684	381.34	205	763	381.34	228	852	387.63	255
750	2.1				101			115			133			154			171			191
1500	3.8				179			204			236			273			304			339
1000	2.5	400	450	414.16	120	513	426.24	136	592	426.24	157	684	426.24	182	763	426.24	203	852	416.52	226
750	1.9				90			102			118			136			152			170
1500	3.3				159			182			210			242			270			302
1000	2.2	450	450	479.82	106	513	489.8	121	592	489.8	140	684	489.8	162	763	489.8	180	852	482.56	201
750	1.7				80			91			105			121			135			151
1500	3.0				143			164			189			218			243			272
1000	2.0	500	450	544.32	96	513	546.62	109	592	546.62	126	684	546.6	145	763	546.6	162	852	545.35	181
750	1.5				72			82			94			109			122			136
1500	2.7				128			146			168			195			217			242
1000	1.8	560	450	630.61	85	513	630.12	97	592	628.12	112	684	628.12	130	763	628.12	145	852	631.81	162
750	1.3				64			73			84			97			109			121
1500	2.4				114			130			150			173			193			216
1000	1.6	630	450	662.65	73	513	670.15	87	592	670.15	100	684	670.15	115	763	670.15	129	852	662.65	144
750	1.2				57			65			75			87			97			108
1500	2.1				101			115			133			154			171			191
1000	1.4	710	450	767.70	67	513	770.08	77	592	770.08	89	684	770.08	102	763	770.08	114	852	767.70	128
750	1.1				51			58			66			77			86			96
1500	1.9				90			102			118			136			152			170
1000	1.3	800	450	822.54	60	513	829.8	68	592	829.8	79	684	829.8	91	763	829.8	110	852	822.54	113
750	0.9				45			51			59			68			76			85
1500	1.7				80			91			105			121			135			151
1000	1.1	900	450	952.94	53	513	961.35	61	592	961.35	70	684	961.35	91	763	961.35	90	852	952.94	101
750	0.8				40			45			52			61			68			75

传动能力表
Selection Table

P3N和P3S传动能力表:(i=140～900)(续前页)　P3N and P3S selection table: (i=140~900)

P3-28			P3-29			P3-30			P3-31			P3-32			P3-33			P3-34			i_N	n_{2N} (r/min)	n_1 (r/min)
T_{2N} (kN·m)	i_{ex}	P_{1N} (kW)	T_{2N} (kN·m)	i_{ex}	P_{1N} (kW)	T_{2N} (kN·m)	i_{ex}	P_{1N} (kW)	T_{2N} (kN·m)	i_{ex}	P_{1N} (kW)	T_{2N} (kN·m)	i_{ex}	P_{1N} (kW)	T_{2N} (kN·m)	i_{ex}	P_{1N} (kW)	T_{2N} (kN·m)	i_{ex}	P_{1N} (kW)			
																						10.7	1500
950	152.47	714	1060	152.47	796	1200	152.47	901	1330	152.79	999	1500	152.79	1127	1680	153.90	1262	1920	153.90	1442	140	7.1	1000
		535			597			676			749			845			946			1082		5.4	750
																						9.4	1500
950	172.34	624	1060	172.34	697	1200	172.34	789	1330	171.71	874	1500	171.71	986	1680	173.96	1104	1920	173.96	1262	160	6.3	1000
		468			522			591			656			739			828			946		4.7	750
																						8.3	1500
950	199.66	555	1060	199.66	619	1200	199.66	701	1330	197.32	777	1500	197.32	876	1680	201.54	981	1920	201.54	1122	180	5.6	1000
		416			464			526			583			657			736			841		4.2	750
																						7.5	1500
950	218.54	499	1060	218.54	557	1200	218.54	631	1330	215.97	699	1500	215.97	789	1680	219.91	883	1920	219.91	1009	200	5.0	1000
		375			418			473			524			591			662			757		3.8	750
		666			743			841			932			1051			1178			1346		6.7	1500
950	242.57	444	1060	242.57	495	1200	242.57	561	1330	239.71	622	1500	239.71	701	1680	243.07	785	1920	243.07	897	225	4.4	1000
		333			372			421			466			526			589			673		3.3	750
		599			669			757			839			946			1060			1211		6.0	1500
950	274.18	400	1060	274.18	446	1200	274.18	505	1330	270.95	559	1500	270.95	631	1680	273.18	707	1920	273.18	808	250	4.0	1000
		300			334			379			420			473			530			606		3.0	750
		535			597			676			749			845			946			1082		5.4	1500
950	317.65	357	1060	317.65	398	1200	317.65	451	1330	313.91	499	1500	313.91	563	1680	313.91	631	1920	313.91	721	280	3.6	1000
		268			299			338			375			422			473			541		3.7	750
		541			603			683			757			854			956			1093		5.4	1500
950	296.01	361	1060	296.01	402	1200	296.01	455	1330	300.72	505	1500	300.72	569	1680	292.05	638	1920	292.05	729	280	3.6	1000
		270			302			342			379			427			476			546		2.7	750
		481			536			607			673			759			850			971		4.8	1500
950	334.59	320	1060	334.59	358	1200	334.59	405	1330	337.97	449	1500	337.97	506	1680	330.11	567	1920	330.11	648	315	3.2	1000
		240			268			304			336			379			425			486		2.4	750
		427			467			539			597			673			754			862		4.2	1500
950	387.63	284	1060	387.63	317	1200	387.63	359	1330	388.37	398	1500	388.37	449	1680	382.45	503	1920	382.45	575	355	2.8	1000
		213			238			269			299			337			377			431		2.1	750
		379			422			478			530			598			669			765		3.8	1500
950	416.52	252	1060	416.52	282	1200	416.52	319	1330	426.24	353	1500	426.24	398	1680	417.18	446	1920	417.18	510	400	2.5	1000
		189			211			239			265			299			335			383		1.9	750
		336			375			425			471			531			595			680		3.3	1500
950	482.56	224	1060	482.56	250	1200	482.56	283	1330	489.80	314	1500	489.80	354	1680	483.31	397	1920	483.31	453	450	2.2	1000
		168			188			213			236			266			298			340		1.7	750
		303			338			383			424			478			536			612		3.0	1500
950	545.35	202	1060	545.35	225	1200	545.35	255	1330	546.60	283	1500	546.60	319	1680	535.90	357	1920	535.90	408	500	2.0	1000
		151			169			191			212			239			268			306		1.5	750
		270			302			342			379			427			478			546		2.7	1500
950	631.81	180	1060	631.81	201	1200	631.81	228	1330	628.12	252	1500	628.12	285	1680	620.86	319	1920	620.86	364	560	1.8	1000
		135			151			171			189			213			239			273		1.3	750
		240			268			304			336			379			425			483		2.4	1500
950	662.65	160	1060	662.65	179	1200	662.65	202	1330	670.15	224	1500	670.15	253	1680	657.74	283	1920	657.74	324	630	1.6	1000
		120			134			152			168			190			213			243		1.2	750
		213			238			269			299			337			377			431		2.1	1500
950	767.70	142	1060	767.70	159	1200	767.70	180	1330	770.08	199	1500	770.08	224	1680	762.02	251	1920	762.02	287	710	1.4	1000
		107			119			135			149			168			189			215		1.1	750
		189			211			239			265			299			335			383		1.9	1500
950	822.54	126	1060	822.54	141	1200	822.54	159	1330	827.92	177	1500	827.92	199	1680	819.53	223	1920	819.53	255	800	1.3	1000
		95			106			120			132			149			167			191		0.9	750
		168			188			213			236			266			298			340		1.7	1500
950	952.94	112	1060	952.94	125	1200	952.94	142	1330	959.17	157	1500	959.17	177	1680	941.73	198	1920	941.73	227	900	1.1	1000
		84			94			106			118			133			149			170		0.8	750

传动能力表
Selection Table

3. P2L传动能力表:(i=31.5～100)　P2L selection table: (i=31.5~100)

n_1 (r/min)	n_{2N} (r/min)	i_N	P2-9			P2-10			P2-11			P2-12			P2-13		
			T_{2N} (kN·m)	i_{ex}	P_{1N} (kW)	T_{2N} (kN·m)	i_{ex}	P_{1N} (kW)	T_{2N} (kN·m)	i_{ex}	P_{1N} (kW)	T_{2N} (kN·m)	i_{ex}	P_{1N} (kW)	T_{2N} (kN·m)	i_{ex}	P_{1N} (kW)
1500	47.6				111			156			212			302			418
1000	31.7	31. 5	22	32.5353	74	31	32.5353	104	42	32.8413	141	60	31.7089	202	83	31.6775	279
750	23.8				55			78			106			151			209
1500	42.3				98			139			188			268			345
1000	28.2	35. 5	22	35.6114	66	31	35.6114	92	42	35.8344	125	60	34.5987	179	83	34.6723	247
750	21.1				49			69			94			134			173
1500	37.5				87			123			167			238			306
1000	25.0	40	22	39.5264	58	31	39.5264	82	42	39.6083	111	60	38.2424	159	83	38.4842	204
750	18.8				44			62			83			119			153
1500	33.3				78			109			148			212			293
1000	22.2	45	22	43.882	52	31	43.882	73	42	43.4177	99	60	41.9206	141	83	42.1856	195
750	16.7				39			55			74			106			146
1500	30.0				70			98			133			191			264
1000	20.0	50	22	50.4204	47	31	50.4204	66	42	50.5248	89	60	48.7826	127	83	49.0910	176
750	15.0				35			49			67			95			132
1500	26.8				62			88			119			170			235
1000	17.9	56	22	55.7278	42	31	55.7278	59	42	55.8432	79	60	53.9176	113	83	54.2585	157
750	13.4				31			44			60			85			118
1500	23.8				55			78			106			151			209
1000	15.9	63	22	60.4521	37	31	60.4521	52	42	60.5773	71	60	58.4884	101	83	62.3263	139
750	11.9				28			39			53			76			105
1500	21.1				49			69			94			134			186
1000	14.1	71	22	69.6115	33	31	69.6115	46	42	69.7557	63	60	67.3503	89	83	67.7761	124
750	10.6				25			35			47			67			93
1500	18.8				44			62			83			119			165
1000	12.5	80	22	79.0528	29	31	79.0528	41	42	79.9667	56	60	77.2092	79	83	77.6973	110
750	9.4				22			31			42			60			82
1500	16.7				39			55			74			106			146
1000	11.1	90	22	86.2394	26	31	86.2394	36	42	86.418	49	60	83.438	71	83	83.9656	98
750	8.3				19			27			37			53			73
1500	15.0				35			49			67			95			132
1000	10.0	100	22	98.2171	23	31	98.2171	33	42	98.4205	44	60	95.0266	64	83	95.6575	88
750	7.5				17			25			33			48			66

传动能力表
Selection Table

P2L传动能力表:(i=31.5～100)(续前页)　P2L selection table: (i=31.5~100)

P2-14			P2-16			P2-17			P2-18			P2-19			i_N	n_{2N} (r/min)	n_1 (r/min)
T_{2N} (kN·m)	i_{ex}	P_{1N} (kW)	T_{2N} (kN·m)	i_{ex}	P_{1N} (kW)	T_{2N} (kN·m)	i_{ex}	P_{1N} (kW)	T_{2N} (kN·m)	i_{ex}	P_{1N} (kW)	T_{2N} (kN·m)	i_{ex}	P_{1N} (kW)			
		510			806			865			1230			1487		47.6	1500
117	31. 6775	340	160	31. 4135	538	202	31.4135	577	244	31.4286	820	295	33.5237	991	31. 5	31.7	1000
		255			403			433			615			743		23.8	750
		478			716			858			1091			1319		42.3	1500
117	34. 6723	324	160	34. 3835	477	202	34.3835	572	244	34.3999	728	295	36.6933	880	35. 5	28.2	1000
		243			358			429			546			660		21.1	750
		432			635			802			969			1171		35.5	1500
117	38. 4842	288	160	38. 1635	423	202	38.1635	535	244	38.1819	646	295	40.7272	781	40	25.0	1000
		216			318			401			484			585		18.8	750
		413			565			713			861			1041		33.3	1500
117	42. 1856	275	160	41. 834	376	202	41.834	475	244	41.149	574	295	46.0254	694	45	22.2	1000
		206			282			356			430			520		16.7	750
		372			508			641			775			937		30.0	1500
117	49. 091	248	160	48. 6818	339	202	48.6818	428	244	49.091	517	295	52.3636	625	50	20.0	1000
		186			254			321			378			468		15.0	750
		332			454			573			692			836		26.8	1500
117	54. 2585	221	160	53. 8063	302	202	53.8063	382	244	54.8664	461	295	58.524	558	56	17.9	1000
		166			227			286			346			418		13.4	750
		295			403			509			615			743		23.8	1500
117	62. 3263	197	160	61. 8069	269	202	61.8069	339	244	62.3263	410	295	66.4812	496	63	15.9	1000
		147			202			255			307			372		11.9	750
		262			358			452			546			660		21.1	1500
117	67. 7761	174	160	67. 2113	239	202	67.2113	301	244	67.7761	364	295	72.2943	440	71	14.1	1000
		131			179			226			273			330		10.6	750
		232			318			401			484			585		18.8	1500
117	77. 6973	155	160	77.0498	212	202	77.0498	267	244	77.6973	323	295	82.8769	390	80	12.5	1000
		116			159			200			242			293		9.4	750
		206			282			356			430			520		16.7	1500
117	83. 9656	138	160	83.2658	188	202	83.2658	238	244	83.9656	287	295	89.563	347	90	11.1	1000
		103			141			178			215			260		8.3	750
		186			254			321			387			468		15.0	1500
117	95. 6275	124	160	94.8305	169	202	94.8305	214	244	95.6275	258	295	102.0023	312	100	10.0	1000
		93			127			160			194			234		7.5	750

注: ▭ 必须采用强制润滑。　Note: ▭ Must use forced lubrication.

传动能力表
Selection Table

3. P2L传动能力表:(i=31.5～100)　P2L selection table: (i=31.5~100)

n_1 (r/min)	n_{2N} (r/min)	i_N	P2-20			P2-21			P2-22			P2-23			P2-24			P2-25		
			T_{2N} (kN·m)	i_{ex}	P_{1N} (kW)	T_{2N} (kN·m)	i_{ex}	P_{1N} (kW)	T_{2N} (kN·m)	i_{ex}	P_{1N} (kW)	T_{2N} (kN·m)	i_{ex}	P_{1N} (kW)	T_{2N} (kN·m)	i_{ex}	P_{1N} (kW)	T_{2N} (kN·m)	i_{ex}	P_{1N} (kW)
1500	47.6				1517			1976			2268									
1000	31.7	31. 5	354	33.5237	1011	392	33.5237	1317	450	33.5237	1512	513	33.8391	1724	592	33.8391	1989	684	33.8391	2298
750	23.8				758			988			1134			1293			1492			1724
1500	42.3				1504			1753			2013									
1000	28.2	35. 5	354	36.6933	1003	392	36.6933	1169	450	36.6933	1342	513	36.9231	1530	592	36.9231	1712	684	36.9231	2040
750	21.1				752			877			1006			1147			1284			1530
1500	37.5				1405			1556			1786									
1000	25.0	40	354	40.7272	937	392	40.7272	1037	450	40.7272	1191	513	40.8116	1358	592	40.8116	1567	684	40.8116	1810
750	18.8				703			778			883			1018			1175			1358
1500	33.3				1249			1383			1588			1810			2089			
1000	22.2	45	354	46.0254	833	392	46.0254	922	450	46.0254	1059	513	46.1208	1207	592	46.1208	1393	684	46.1208	1690
750	16.7				625			692			794			905			1044			1207
1500	30.0				1124			1245			1429			1629			1880			
1000	20.0	50	354	52.3636	749	392	52.3636	830	450	52.3636	953	513	52.472	1086	592	52.472	1253	684	52.1365	1448
750	15.0				562			622			714			815			940			1086
1500	26.8				1004			1111			1276			1455			1678			
1000	17.9	56	354	58.524	669	392	58.524	741	450	58.524	851	513	58.6452	970	592	58.6452	1119	684	58.6452	1293
750	13.4				502			556			638			727			839			970
1500	23.8				892			988			1134			1293			1492			1724
1000	15.9	63	354	66.4812	595	392	66.4812	659	450	66.4812	756	513	66.6189	862	592	66.6189	995	684	66.6189	1149
750	11.9				446			494			567			646			746			862
1500	21.1				792			877			1006			1147			1324			1530
1000	14.1	71	354	72.2943	528	392	72.2943	584	450	72.2943	671	513	72.4441	765	592	72.4441	883	684	72.4441	1020
750	10.6				396			438			503			574			662			765
1500	18.8				703			778			893			1018			1175			1358
1000	12.5	80	354	82.8769	468	392	82.8769	519	450	82.8769	595	513	83.0486	679	592	83.0486	783	684	83.0486	905
750	9.4				351			389			447			509			587			679
1500	16.7				625			692			794			905			1044			1207
1000	11.1	90	354	89.563	416	392	89.563	461	450	89.563	529	513	89.7486	603	592	89.7486	696	684	89.7486	804
750	8.3				312			346			397			453			522			603
1500	15.0				562			622			714			815			940			1086
1000	10.0	100	354	102.0023	375	392	102.0023	415	450	102.0023	476	513	102.2136	543	592	102.2136	627	684	102.2136	724
750	7.5				281			311			357			407			470			543

注: ▭ 必须采用强制润滑。　Note: ▭ Must use forced lubrication.

传动能力表
Selection Table

P2L传动能力表:(i=31.5 ~100)(续前页) P2L selection table: (i=31.5~100)

P2-26			P2-27			P2-28			P2-29			P2-30			P2-31-P2-34			i_N	n_{2N} (r/min)	n_1 (r/min)
T_{2N} (kN·m)	i_{ex}	P_{1N} (kW)	T_{2N} (kN·m)	i_{ex}	P_{1N} (kW)	T_{2N} (kN·m)	i_{ex}	P_{1N} (kW)	T_{2N} (kN·m)	i_{ex}	P_{1N} (kW)	T_{2N} (kN·m)	i_{ex}	P_{1N} (kW)	T_{2N} (kN·m)	i_{ex}	P_{1N} (kW)			
																			47.6	1500
763	33.8391	2564	852	33.5237	2863	950	33.5237	2937	1060	33.5237		1200	33.5237					31. 5	31.7	1000
		1923			2147			2203											23.8	750
																			42.3	1500
763	36.9231	2275	852	36.6933	2540	950	36.6933	2833	1060	36.6933		1200	36.6933					35. 5	28.2	1000
		1706			1905			2124											21.1	750
																			37.5	1500
763	40.8116	2019	852	40.7272	2255	950	40.7272	2514	1060	40.7272		1200	40.7272					40	25.0	1000
		1514			1691			1885											18.8	750
																			33.3	1500
763	45.1208	1795	852	46.0254	2004	950	46.0254	2235	1060	46.0254		1200	46.0254					45	22.2	1000
		1346			1503			1676			1870			2117					16.7	750
															按客户要求供货 According to customer requirements supply commodity				30.0	1500
763	52.1365	1615	852	52.0288	1804	950	52.0288	2011	1060	52.0288		1200	52.0288					50	20.0	1000
		1211			1353			1508			1683			1905					15.0	750
																			26.8	1500
763	58.6452	1442	852	58.524	1610	950	58.524	1796	1060	58.524	2004	1200	58.524	2268				56	17.9	1000
		1082			1208			1347			1503			1701					13.4	750
		1923			2147			2394											23.8	1500
763	66.6189	1282	852	66.4812	1432	950	66.4812	1596	1060	66.4812	1781	1200	66.4812	2016				63	15.9	1000
		961			1074			1197			1336			1512					11.9	750
		1706			1905			2124											21.1	1500
763	72.4441	1138	852	72.2943	1270	950	72.2943	1416	1060	72.2943	1580	1200	72.2943	1789				71	14.1	1000
		853			953			1062			1185			1342					10.6	750
		1514			1691			1885											18.8	1500
763	83.0486	1010	852	82.8769	1127	950	82.8769	1257	1060	82.8769	1403	1200	82.8769	1588				80	12.5	1000
		757			845			943			1052			1191					9.4	750
		1346			1503			1676			1870			2117					16.7	1500
763	89.7486	897	852	89.563	1002	950	89.563	1117	1060	89.563	1247	1200	89.563	1411				90	11.1	1000
		673			752			838			935			1059					8.3	750
		1211			1353			1508			1683			1905					15.0	1500
763	102.2136	808	852	102.0023	902	950	102.0023	1006	1060	102.0023	1122	1200	102.0023	1270				100	10.0	1000
		606			676			754			842			953					7.5	750

注: ▬ 必须采用强制润滑。 Note: ▬ Must use forced lubrication.

传动能力表
Selection Table

4. P2K传动能力表:(i=112 ~560) P2K selection table:(i=112~560)

n_1 (r/min)	n_{2N} (r/min)	i_N	P2-9			P2-10			P2-11			P2-12			P2-13			P2-14		
			T_{2N} (kN·m)	i_{ex}	P_{1N} (kW)	T_{2N} (kN·m)	i_{ex}	P_{1N} (kW)	T_{2N} (kN·m)	i_{ex}	P_{1N} (kW)	T_{2N} (kN·m)	i_{ex}	P_{1N} (kW)	T_{2N} (kN·m)	i_{ex}	P_{1N} (kW)	T_{2N} (kN·m)	i_{ex}	P_{1N} (kW)
1500	13.4				30.9			43.6			59.0			84			117			164
1000	8.9	112	22	111.25	20.6	31	111.25	29.0	42	111.83	39.4	60	107.97	56	83	107.97	78	117	107.76	110
750	6.7				15.5			21.8			29.5			42			58			82
1500	12.0				27.7			39.0			52.9			76			105			147
1000	8.0	125	22	125.75	18.5	31	125.75	26.0	42	125.68	35.3	60	121.35	50	83	121.8	70	117	121.8	98
750	6.0				13.9			19.5			26.4			38			52			74
1500	10.7				24.7			34.9			47.2			67			93			132
1000	7.1	140	22	145.69	16.5	31	145.69	23.2	42	144.42	31.5	60	139.44	45	83	141.11	62	117	141.11	88
750	5.4				12.4			17.4			23.6			34			47			66
1500	9.4				21.6			30.5			41.3			59			82			115
1000	6.3	160	22	157.28	14.4	31	157.28	20.3	42	155.27	27.5	60	149.91	39	83	151.19	54	117	151.19	77
750	4.7				10.8			15.3			20.7			30			41			58
1500	8.3				19.2			27.1			36.7			52			73			102
1000	5.6	180	22	175.77	12.8	31	175.77	18.1	42	173.52	24.5	60	167.54	35	83	167.85	48	117	167.85	68
750	4.2				9.6			13.6			18.4			26			36			51
1500	7.5				17.3			24.4			33.1			47			65			92
1000	5.0	200	22	203.53	11.5	31	203.53	16.3	42	200.92	22.0	60	193.99	31	83	192.86	44	117	192.86	61
750	3.8				8.7			12.2			16.5			24			33			46
1500	6.7				15.4			21.7			29.4			42			58			82
1000	4.4	225	22	223.22	10.3	31	223.22	14.5	42	200.36	19.6	60	212.76	28	83	213.16	39	117	213.16	55
750	3.3				7.7			10.8			14.7			21			29			41
1500	6.0				13.9			19.5			26.4			39			52			74
1000	4.0	250	22	242.15	9.2	31	242.15	13.0	42	239.04	17.6	60	230.8	25	83	231.23	35	117	231.23	49
750	3.0				6.9			9.8			13.2			19			26			37
1500	5.4				12.4			17.4			23.6			34			47			66
1000	3.6	280	22	278.84	8.2	31	278.84	11.6	42	275.26	15.7	60	265.77	22	83	266.26	31	117	266.26	44
750	2.7				6.2			8.7			11.8			17			23			33
1500	4.7				10.8			15.3			20.7			30			41			58
1000	3.1	320	22	316.65	7.2	31	316.65	10.2	42	312.6	13.8	60	301.82	20	83	302.38	76	117	302.38	38
750	2.3				5.4			7.6			10.3			15			20			29
1500	4.2				9.6			13.6			18.4			26			36			51
1000	2.8	360	22	345.44	6.4	31	345.44	9.0	42	341.01	12.2	60	329.25	17	83	329.86	24	117	329.86	34
750	2.1				4.8			6.8			9.2			13			18			26
1500	3.8				8.7			12.2			16.5			24			33			46
1000	2.5	400	22	393.42	5.8	31	393.42	8.1	42	388.38	11.0	60	374.98	16	83	375.68	22	117	375.68	31
750	1.9				4.3			6.1			8.3			12			16			23
1500	3.3				7.7			10.8			14.7			21			29			41
1000	2.2	450	22	442.27	5.1	31	442.27	7.2	42	436.6	9.8	60	421.54	14	83	422.33	19	117	422.33	27
750	1.7				3.8			5.4			7.3			10			15			20
1500	3.0				6.9			9.8			13.2			19			26			37
1000	2.0	500	22	484.63	4.6	31	487.63	6.5	42	481.38	8.8	60	464.78	13	83	465.64	17	117	465.64	25
750	1.5				3.5			4.9			6.6			9			13			18
1500	2.7		按客户要求供货 According to customer requirements supply commodity																	
1000	1.8	560																		
750	1.3																			

传动能力表
Selection Table

P2K传动能力表:(i=112～560)(续前页)　P2K selection table:(i=112~560)

P2-16			P2-17			P2-18			P2-19			P2-20			i_N	n_{2N} (r/min)	n_1 (r/min)
T_{2N} (kN·m)	i_{ex}	P_{1N} (kW)	T_{2N} (kN·m)	i_{ex}	P_{1N} (kW)	T_{2N} (kN·m)	i_{ex}	P_{1N} (kW)	T_{2N} (kN·m)	i_{ex}	P_{1N} (kW)	T_{2N} (kN·m)	i_{ex}	P_{1N} (kW)			
160	108.47	225	220	108.47	284	244	107.76	343	295	114.94	415	354	114.94	498	112	13.4	1500
		150			189			229			276			332		8.9	1000
		112			142			171			207			249		6.7	750
160	122.6	201	220	122.6	254	244	121.8	307	295	129.92	372	354	129.92	446	125	12.0	1500
		134			170			205			248			297		8.0	1000
		101			127			154			186			223		6.0	750
160	142.04	180	220	142.04	227	244	141.11	274	295	150.52	332	354	150.52	398	140	10.7	1500
		120			151			183			221			265		7.1	1000
		90			114			137			166			199		5.4	750
160	153.05	157	220	153.05	199	244	151.19	240	295	161.27	290	354	161.27	348	160	9.4	1500
		105			132			160			193			232		6.3	1000
		79			99			120			145			174		4.7	750
160	167.77	140	220	167.77	177	244	165.73	213	295	176.78	258	354	176.78	310	180	8.3	1500
		93			118			142			172			206		5.6	1000
		70			88			107			129			155		4.2	750
160	195.23	126	220	195.23	159	244	192.86	192	295	205.71	232	354	205.71	279	200	7.5	1500
		84			106			128			155			186		5.0	1000
		63			79			96			116			139		3.8	750
160	215.79	112	220	215.79	141	244	213.16	171	295	227.37	206	354	227.37	248	225	6.7	1500
		75			94			114			138			165		4.4	1000
		56			71			85			103			124		3.3	750
160	234.08	101	220	234.08	127	244	244.85	154	295	261.18	186	354	261.18	223	250	6.0	1500
		67			85			102			124			149		4.0	1000
		50			64			77			93			111		3.0	750
160	269.55	90	220	269.55	114	244	266.26	137	295	284.01	166	354	284.01	199	280	5.4	1500
		60			76			91			111			133		3.6	1000
		45			57			69			83			100		2.7	750
160	309	79	220	309	99	244	305.24	120	295	325.59	145	354	325.59	174	320	4.7	1500
		52			66			80			97			116		3.1	1000
		39			50			60			73			87		2.3	750
160	333.93	70	220	333.93	88	244	329.86	107	295	351.86	129	354	351.86	155	360	4.2	1500
		47			59			71			86			103		2.8	1000
		35			44			53			64			77		2.1	750
160	380.31	63	220	380.31	79	244	375.68	96	295	400.72	116	354	400.72	139	400	3.8	1500
		42			53			64			77			93		2.5	1000
		31			40			48			58			70		1.9	750
160	427.53	56	220	427.53	71	244	422.33	85	295	450.48	103	354	450.48	124	450	3.3	1500
		37			47			57			69			83		2.2	1000
		28			35			43			52			62		1.7	750
160	471.38	50	220	471.38	64	244	465.64	77	295	496.68	93	354	496.68	111	500	3.0	1500
		34			42			51			62			74		2.0	1000
		25			32			38			46			56		1.5	750
按客户要求供货 According to customer requirements supply commodity															560	2.7	1500
																1.8	1000
																1.3	750

传动能力表
Selection Table

5. P3K传动能力表:(i=560 ~4000)　P3KSelection table: (i=560~4000)

n_1 (r/min)	n_{2N} (r/min)	i_N	P3-9			P3-10			P3-11			P3-12			P3-13		
			T_{2N} (kN·m)	i_{ex}	P_{1N} (kW)	T_{2N} (kN·m)	i_{ex}	P_{1N} (kW)	T_{2N} (kN·m)	i_{ex}	P_{1N} (kW)	T_{2N} (kN·m)	i_{ex}	P_{1N} (kW)	T_{2N} (kN·m)	i_{ex}	P_{1N} (kW)
1500	2.68	560	22	566.22	6.3	31	566.22	9	42	567.4	12	60	547.83	17	83	551.29	24
1000	1.79				4.2			6			8			11			16
750	1.34				3.1			4.4			6			9			12
1500	2.38	630	22	640.02	5.6	31	640.02	7.8	42	637.68	11	60	615.69	15	83	623.14	21
1000	1.59				3.7			5.2			7			10			14
750	1.19				2.8			3.9			5			8			11
1500	2.11	710	22	700.53	5.0	31	700.53	7	42	697.96	9	60	673.9	14	83	682.06	19
1000	1.41				3.3			4.5			6			9			12
750	1.06				2.5			3.5			5			7			9
1500	1.88	800	22	777.54	4.4	31	777.54	6	42	774.7	8	60	747.98	12	83	757.04	17
1000	1.25				2.9			4			6			8			11
750	0.94				2.2			3			4			6			8
1500	1.67	900	22	878.88	3.9	31	878.88	5.5	42	875.66	7.5	60	845.46	11	83	855.70	15
1000	1.11				2.6			3.7			5			7			10
750	0.83				2.0			2.7			3.7			5			7
1500	1.50	1000	22	982.19	3.5	31	982.19	5	42	978.6	6.7	60	944.85	10	83	956.3	13
1000	1.00				2.3			3.3			4.5			6			9
750	0.75				1.8			2.5			3.4			5			7
1500	1.34	1120	22	1137.3	3.1	31	1137.3	4.4	42	1133.1	6	60	1094	9	83	1107.3	12
1000	0.89				2.1			2.9			4			6			8
750	0.67				1.6			2.2			3			4.5			6
1500	1.20	1250	22	1247.3	2.8	31	1247.3	4.0	42	1242.8	5.4	60	1199.9	8	83	1214.4	11
1000	0.80				1.9			2.6			3.6			5			7
750	0.60				1.4			2.0			2.7			4			5
1500	1.07	1400	22	1351.1	2.5	31	1351.1	3.5	42	1348.1	4.8	60	1301.6	7	83	1317.4	4.9
1000	0.71				1.7			2.4			3.2			5			6
750	0.54				1.3			1.8			2.4			3.5			4.5
1500	0.94	1600	22	1558.1	2.2	31	1558.1	3.1	42	1552.4	4.2	60	1498.9	6	83	1517	8
1000	0.63				1.5			2.1			2.8			4			6
750	0.47				1.1			1.5			2.1			3			4
1500	0.83	1800	22	1769.4	2.0	31	1769.4	2.8	42	1762.9	3.7	60	1702.1	5	83	1722.8	7
1000	0.56				1.3			1.8			2.5			4			5
750	0.42				1.0			1.4			1.9			2.7			3.7
1500	0.75	2000	22	1930.3	1.8	31	1930.3	2.5	42	1923.2	3.4	60	1856.9	4.8	83	1879.4	6.6
1000	0.50				1.2			1.7			2.2			3.2			1.4
750	0.38				0.9			1.2			1.7			2.4			3.3
1500	0.67	2240	22	2198.4	1.6	31	2198.4	2.2	42	2190.3	3.0	60	2114.8	4.3	83	2140.4	5.9
1000	0.45				1.0			1.5			2.0			2.9			3.9
750	0.33				0.8			1.1			1.5			2.1			3.0
1500	0.60	2500	22	2471.3	1.4	31	2471.3	2.0	42	2462.3	2.7	60	2377.4	3.8	83	2406.1	5.3
1000	0.40				0.9			1.3			1.8			2.6			3.5
750	0.30				0.7			1.0			1.3			1.9			2.7
1500	0.54	2800	22	2724.8	1.3	31	2724.8	1.8	42	2714.8	2.4	60	2621.2	3.4	83	2652.9	4.7
1000	0.36				0.8			1.2			1.6			2.3			3.2
750	0.27				0.6			0.9			1.2			1.7			2.4
1500	0.48	3150	22	3105	1.1	31	3104.9	1.6	42	3093.6	2.1	60	2986.9	3.0	83	3023.1	4.2
1000	0.32				0.7			1.0			1.4			2.0			2.8
750	0.24				0.6			0.8			1.1			1.5			2.1
1500	0.42	3550	22	3597.2	1.0	31	3597.2	1.4	42	3584.1	1.9	60	3460.5	2.7	83	3502.4	3.7
1000	0.28				0.7			0.9			1.3			1.8			2.5
750	0.21				0.5			0.7			0.9			1.4			1.9
1500	0.38	4000	22	4167.5	0.9	31	4167.5	1.2	42	4118.5	1.7	60	3976.5	2.4	83	4057.6	3.3
1000	0.25				0.6			0.8			1.1			1.6			4.2
750	0.19				0.4			0.6			0.8			1.2			1.7

传动能力表
Selection Table

P3K传动能力表:(i=560～4000)(续前页)　P3KSelection table: (i=560~4000)

P3-14			P3-16			P3-17			P3-18			P3-19			i_N	n_{2N} (r/min)	n_1 (r/min)
T_{2N} (kN·m)	i_{ex}	P_{1N} (kW)	T_{2N} (kN·m)	i_{ex}	P_{1N} (kW)	T_{2N} (kN·m)	i_{ex}	P_{1N} (kW)	T_{2N} (kN·m)	i_{ex}	P_{1N} (kW)	T_{2N} (kN·m)	i_{ex}	P_{1N} (kW)			
		33			46			58			70			84		2.68	1500
117	551.29	22	160	551.25	30	202	551.25	38	244	544.28	46	295	580.56	56	560	1.79	1000
		17			23			29			35			42		1.34	750
		30			41			51			62			75		2.38	1500
117	623.14	20	160	623.09	27	202	623.09	34	244	615.21	41	295	656.22	50	630	1.59	1000
		15			20			26			31			37		1.19	750
		26			36			45			55			66		2.11	1500
117	682.06	18	160	679.88	24	202	679.88	30	244	673.37	37	295	718.27	44	710	1.41	1000
		13			18			23			27			33		1.06	750
		23			32			40			49			59		1.88	1500
117	757.04	16	160	751.48	21	202	751.48	27	244	747.4	32	295	797.23	39	800	1.25	1000
		12			16			20			24			29		0.94	750
		21			28			36			43			52		1.67	1500
117	855.70	14	160	844.56	19	202	844.56	24	244	844.81	29	295	901.13	35	900	1.11	1000
		10			14			18			22			26		0.83	750
		19			26			32			39			47		1.50	1500
117	956.3	12	160	943.84	17	202	943.84	22	244	937.9	26	295	1000.4	31	1000	1.00	1000
		9			13			16			19			24		0.75	750
		17			23			29			35			42		1.34	1500
117	1107.3	11	160	1092.4	15	202	1092.9	19	244	1077.6	23	295	1149.5	28	1120	0.86	1000
		8			11			14			17			21		0.67	750
		15			20			26			31			38		1.20	1500
117	1214.4	10	160	1198.6	14	202	1198.6	17	244	1191.1	21	295	1270.5	25	1250	0.80	1000
		7			10			13			16			19		0.60	750
		13			18			23			28			34		1.07	1500
117	1317.4	9	160	1300.2	12	202	1300.2	15	244	1292.1	19	295	1378.2	22	1400	0.71	1000
		7			9			12			14			17		0.54	750
		12			16			20			24			29		0.94	1500
117	1517	8	160	1497.3	11	202	1497.3	13	244	1487.8	16	295	1587	20	1600	0.63	1000
		6			8			10			12			15		0.47	750
		10			14			18			22			26		0.83	1500
117	1722.8	7	160	1700.3	9	202	1700.3	12	244	1689.6	14	295	1802.3	17	1800	0.56	1000
		5.2			7.1			9			11			13		0.42	750
		9.4			12.8			16			19			24		0.75	1500
117	1879.4	6.2	160	1854.9	8.5	202	1854.9	11	244	1843.2	13	295	1966.1	16	2000	0.50	1000
		4.7			6.4			8			10			12		0.38	750
		8.3			11.4			14			17			21		0.67	1500
117	2140.4	5.6	160	2112.5	7.6	202	2112.5	10	244	2099.2	12	295	2239.2	14	2240	0.45	1000
		4.2			5.7			7.2			8.7			10.5		0.33	750
		7.5			1.02			12.9			16			19		0.60	1500
117	2406.1	5.0	160	2374.8	6.8	202	2374.8	8.6	244	2359.9	10.4	295	2517.2	12.6	2500	0.40	1000
		3.7			5.1			6.5			7.8			9.4		0.30	750
		6.7			9.1			12			14			17		0.54	1500
117	2652.9	4.5	160	2618.4	6.1	202	2618.4	7.7	244	2601.9	9.3	295	2775.4	11.2	2800	0.36	1000
		3.3			4.6			5.8			7.0			8.4		0.27	750
		5.9			8.1			10.2			12			15		0.48	1500
117	3023.1	4.0	160	2983.8	5.4	202	2983.8	6.8	244	2965	8.3	295	3162.6	10	3150	0.32	1000
		3.0			4.1			5.1			6.2			7.5		0.24	750
		5.3			7.2			9.1			11			13		0.42	1500
117	3502.4	3.5	160	3428.7	4.8	202	3428.7	6.1	244	3435	7.3	295	3664	8.9	3550	0.28	1000
		2.6			3.6			4.6			5.5			6.6		0.21	750
		4.7			6.4			8.1			9.7			12		0.38	1500
117	4057.6	3.1	160	3972.2	4.3	202	3972.2	5.4	244	3979.6	6.5	295	4244.9	7.9	4000	0.25	1000
		2.3			3.2			4.0			4.9			5.9		0.19	750

传动能力表
Selection Table

P3K传动能力表:(i=560～4000)(续前页)　P3KSelection table: (i=560~4000)

n_1 (r/min)	n_{2N} (r/min)	i_N	P3-20			P3-21			P3-22			P3-23			P3-24			P3-25		
			T_{2N} (kN·m)	i_{ex}	P_{1N} (kW)	T_{2N} (kN·m)	i_{ex}	P_{1N} (kW)	T_{2N} (kN·m)	i_{ex}	P_{1N} (kW)	T_{2N} (kN·m)	i_{ex}	P_{1N} (kW)	T_{2N} (kN·m)	i_{ex}	P_{1N} (kW)	T_{2N} (kN·m)	i_{ex}	P_{1N} (kW)
1500	2.68				101			112			128			146			169			195
1000	1.79	560	354	580.56	67	392	580.56	75	450	580.56	86	513	593.88	98	592	593.88	113	684	593.88	130
750	1.34				51			56			64			73			84			98
1500	2.38				90			99			114			130			150			174
1000	1.59	630	354	656.22	60	392	656.22	66	450	656.22	76	513	667.44	87	592	667.44	100	684	667.44	116
750	1.19				45			50			57			65			75			87
1500	2.11				80			88			101			115			133			154
1000	1.41	710	354	718.27	53	392	718.27	59	450	718.27	68	513	730.55	77	592	730.55	89	684	730.55	103
750	1.06				40			44			51			58			67			77
1500	1.88				71			78			90			102			118			137
1000	1.25	800	354	797.23	47	392	797.23	52	450	797.23	60	513	810.87	68	592	810.87	79	684	810.87	91
750	0.94				35			39			45			51			59			68
1500	1.67				63			70			80			91			105			121
1000	1.11	900	354	901.13	42	392	901.13	46	450	901.13	53	513	916.54	61	592	916.54	70	684	916.54	81
750	0.83				31			35			40			46			53			61
1500	1.50				57			63			72			82			95			109
1000	1.00	1000	354	1000.4	38	392	1000.4	42	450	1000.4	48	513	1004.7	55	592	1004.7	63	684	1004.7	73
750	0.75				28			31			36			41			47			55
1500	1.34				51			56			64			73			84			98
1000	0.89	1120	354	1149.5	34	392	1149.5	37	450	1149.5	43	513	1169.1	49	592	1169.1	56	684	1169.1	65
750	0.67				25			28			32			37			42			49
1500	1.20				45			50			58			66			76			87
1000	0.80	1250	354	1270.5	30	392	1270.5	33	450	1270.5	38	513	1292.2	44	592	1292.2	50	684	1992.2	58
750	0.60				23			25			29			33			38			44
1500	1.07				40			45			51			59			68			78
1000	0.71	1400	354	1378.2	27	392	1378.2	30	450	1378.2	34	513	1401.8	39	592	1401.8	45	684	1401.8	52
750	0.54				20			22			26			29			34			39
1500	0.94				35			39			45			51			59			68
1000	0.63	1600	354	1587	24	392	1587	26	450	1587	30	513	1614.2	34	592	1614.2	39	684	1614.2	46
750	0.47				18			20			22			26			30			34
1500	0.83				31			35			40			46			53			61
1000	0.56	1800	354	1802.3	21	392	1802.3	23	450	1802.3	27	513	1850.4	30	592	1850.4	35	684	1850.4	40
750	0.42				16			17			20			23			26			30
1500	0.75				28			31			36			41			47			55
1000	0.50	2000	354	1966.1	19	392	1966.1	21	450	1966.1	24	513	1999.7	27	592	1999.7	32	684	1999.7	36
750	0.38				14			16			18			20			24			27
1500	0.67				25			28			32			37			42			49
1000	0.45	2240	354	2239.2	17	392	2239.2	19	450	2239.2	21	513	2277.5	24	592	2277.5	28	684	2277.5	33
750	0.33				12.6			14			16			18			21			24
1500	0.60				23			25			29			33			38			44
1000	0.40	2500	354	2517.2	15.1	392	2517.2	17	450	2517.2	19	513	2560.2	22	592	2560.2	25	684	2560.2	29
750	0.30				11.3			13			14			16			19			22
1500	0.54				20			22			26			29			34			39
1000	0.36	2800	354	2775.4	13.5	392	2775.4	15	450	2775.4	17	513	2822.8	20	592	2822.8	23	684	2822.8	26
750	0.27				10.1			11.2			13			15			17			20
1500	0.48				18			20			23			26			30			35
1000	0.32	3150	354	3162.6	12	392	3162.6	13.3	450	3162.6	15	513	3216.7	17	592	3216.7	20	684	3216.7	23
750	0.24				9			9.9			11			13			15			17
1500	0.42				16			18			20			23			27			31
1000	0.28	3550	354	3664	10.6	392	3664	11.8	450	3664	14	513	3726.7	15	592	3726.7	18	684	3726.7	21
750	0.21				8			8.8			10			12			13			15
1500	0.38				14			16			18			20			24			27
1000	0.25	4000	354	4244.9	9.4	392	4244.9	10.4	450	4244.9	12	513	4282.4	14	592	4282.4	16	684	4282.4	18
750	0.19				7.1			7.8			9			10			12			14

传动能力表
Selection Table

P3K传动能力表:(i=560～4000)(续前页)　P3KSelection table: (i=560~4000)

P3-26			P3-27			P3-28			P3-29			P3-30			P3-31-P3-34			i_N	n_{2N} (r/min)	n_1 (r/min)
T_{2N} (kN·m)	i_{ex}	P_{1N} (kW)	T_{2N} (kN·m)	i_{ex}	P_{1N} (kW)	T_{2N} (kN·m)	i_{ex}	P_{1N} (kW)	T_{2N} (kN·m)	i_{ex}	P_{1N} (kW)	T_{2N} (kN·m)	i_{ex}	P_{1N} (kW)	T_{2N} (kN·m)	i_{ex}	P_{1N} (kW)			
		218			243			271			303			342					2.68	1500
763	593.88	145	852	580.56	162	950	580.56	181	1060	580.56	202	1200	580.56	228				560	1.79	1000
		109			122			136			151			171					1.34	750
		194			216			241			269			304					2.38	1500
763	667.44	129	852	656.22	144	950	656.22	161	1060	656.22	179	1200	656.22	203				630	1.59	1000
		97			108			121			134			152					1.19	750
		175			192			214			239			270					2.11	1500
763	730.55	115	852	718.27	128	950	718.27	143	1060	718.27	159	1200	718.27	180				710	1.41	1000
		86			96			107			119			135					1.06	750
		152			170			190			212			240					1.88	1500
763	810.87	102	852	797.23	113	950	797.23	127	1060	797.23	141	1200	797.23	160				800	1.25	1000
		76			85			95			106			120					0.94	750
		136			151			169			188			213					1.67	1500
763	916.54	90	852	901.13	101	950	901.13	112	1060	901.13	125	1200	901.13	142				900	1.11	1000
		68			76			84			94			107					0.83	750
		122			136			152			169			192					1.50	1500
763	1004.7	81	852	987.8	91	950	987.8	101	1060	987.8	113	1200	987.8	128				1000	1.00	1000
		61			68			76			85			96					0.75	750
		109			122			136			151			171					1.34	1500
763	1169.1	73	852	1149.5	81	950	1149.5	90	1060	1149.5	101	1200	1149.5	114				1120	0.86	1000
		54			61			68			76			86					0.67	750
		98			109			121			136			153					1.20	1500
763	1992.2	65	852	1270.5	73	950	1270.5	81	1060	1270.5	90	1200	1270.5	102				1250	0.80	1000
		49			54			61			68			77					0.60	750
		87			97			108			121			137	按客户要求供货 According to customer requirements supply commodity				1.07	1500
763	1401.8	58	852	1459.5	65	950	1459.4	72	1060	1459.5	81	1200	1459.5	91				1400	0.71	1000
		44			49			54			61			68					0.54	750
		76			85			95			106			120					0.94	1500
763	1614.2	51	852	1587	57	950	1587	63	1060	1587	71	1200	1587	80				1600	0.63	1000
		38			43			47			53			60					0.47	750
		68			76			84			94			107					0.83	1500
763	1850.4	45	852	1819.3	50	950	1819.3	56	1060	1819.3	63	1200	1819.3	71				1800	0.56	1000
		34			38			42			47			53					0.42	750
		61			68			76			85			96					0.75	1500
763	1999.7	41	852	1966.1	45	950	1966.1	51	1060	1966.1	56	1200	1966.1	64				2000	0.50	1000
		30			34			38			42			48					0.38	750
		54			61			68			76			86					0.67	1500
763	2277.5	36	852	2239.2	41	950	2239.2	45	1060	2239.2	50	1200	2239.2	57				2240	0.45	1000
		27			30			34			38			43					0.33	750
		49			54			61			68			77					0.60	1500
763	2560.2	33	852	2517.2	36	950	2517.2	20	1060	2517.2	45	1200	2517.2	51				2500	0.40	1000
		24			27			30			34			38					0.30	750
		44			49			54			61			68					0.54	1500
763	2822.8	29	852	2775.4	32	950	2775.4	36	1060	2775.4	40	1200	2775.4	45				2800	0.36	1000
		22			24			27			30			34					0.27	750
		39			43			48			54			61					0.48	1500
763	3216.7	26	852	3162.6	29	950	3162.6	32	1060	3162.6	36	1200	3162.6	41				3150	0.32	1000
		19			22			24			27			30					0.24	750
		34			38			43			48			54					0.42	1500
763	3726.7	23	852	3664	26	950	3664	29	1060	3664	32	1200	3664	36				3550	0.28	1000
		17			19			21			24			27					0.21	750
		30			34			38			42			48					0.38	1500
763	4282.4	20	852	4244.9	23	950	4244.9	25	1060	4244.9	28	1200	4244.9	32				4000	0.25	1000
		15			17			19			21			24					0.19	750

额定热容量
Thermal Capacity

1. P2N.热容量(卧式安装):

风速 \ 机座号 P_{G1}	9	10	11	12	13	14	16	17	18	19/20	21/22	23/24	25/26	27/28	29/30	31/32	33/34
狭小空间安装 风速≥0.5m/s	21	26	32	42	49	65	75	92	100	119	142	174	201	242	278	326	366
大厅或大车间安装 风速≥1.4m/s	29	37	45	60	69	92	106	130	147	169	201	246	285	343	406	462	519
室外安装 风速≥3.7m/s	39	50	60	80	93	125	143	175	191	228	272	333	386	464	505	626	702

2. P2S.热容量(卧式安装):

风速 \ 机座号 P_{G1}	9	10	11	12	13	14	16	17	18	19/20	21/22	23/24	25/26	27/28	29/30	31/32	33/34
狭小空间安装 风速≥0.5m/s	15	20	24	32	36	49	56	69	75	89	106	130	151	182	215	245	275
大厅或大车间安装 风速≥1.4m/s	22	28	34	45	52	69	79	97	106	127	151	185	214	257	305	347	389
室外安装 风速≥3.7m/s	29	38	45	60	70	94	107	132	143	171	204	250	289	348	412	469	527

3. P3N.热容量(卧式安装):

风速 \ 机座号 P_{G1}	9	10	11	12	13	14	16	17	18	19/20	21/22	23/24	25/26	27/28	29/30	31/32	33/34
狭小空间安装 风速≥0.5m/s	14	18	22	29	34	46	52	64	70	83	99	121	241	169	200	228	256
大厅或大车间安装 风速≥1.4m/s	20	26	31	41	48	64	74	91	99	118	140	172	199	240	284	323	362
室外安装 风速≥3.7m/s	28	35	42	56	65	87	100	123	133	159	190	233	269	324	384	437	490

4. P3S.热容量(卧式安装):

风速 \ 机座号 P_{G1}	9	10	11	12	13	14	16	17	18	19/20	21/22	23/24	25/26	27/28	29/30	31/32	33/34
狭小空间安装 风速≥0.5m/s	12	15	18	24	28	40	43	53	57	69	82	100	116	139	165	188	211
大厅或大车间安装 风速≥1.4m/s	17	21	26	34	40	53	61	75	81	97	116	142	164	197	234	166	298
室外安装 风速≥3.7m/s	23	29	35	46	54	72	82	101	110	131	156	192	222	267	316	360	404

额定热容量
Thermal Capacity

5. P2L.热容量(卧式安装):

机座号 / 风速 P_{G1}	9	10	11	12	13	14	16	17	18	19/20	21/22	23/24	25/26	27/28	29/30	31-34
狭小空间安装 风速≥0.5m/s	14	18	22	29	34	46	52	64	70	83	99	121	141	169	200	按客户要求供货
大厅或大车间安装 风速≥1.4m/s	20	26	31	41	48	64	74	91	99	118	140	172	199	240	284	
室外安装 风速≥3.7m/s	28	35	42	56	65	87	100	123	133	159	190	233	269	324	384	

6. P2K.热容量(卧式安装):

机座号 / 风速 P_{G1}	9	10	11	12	13	14	16	17	18	19/20
狭小空间安装 风速≥0.5m/s	12	15	18	24	28	38	44	53	58	69
大厅或大车间安装 风速≥1.4m/s	17	22	26	35	40	54	62	76	82	98
室外安装 风速≥3.7m/s	23	29	35	47	54	73	83	102	111	133

7. P3K.热容量(卧式安装):

机座号 / 风速 P_{G1}	9	10	11	12	13	14	16	17	18	19/20	21/22	23/24	25/26	27/28	29/30	31/34
狭小空间安装 风速≥0.5m/s	10	12	15	20	23	31	35	43	47	56	67	82	95	109	125	按客户要求供货
大厅或大车间安装 风速≥1.4m/s	14	17	21	28	33	44	50	61	66	79	95	116	106	125	144	
室外安装 风速≥3.7m/s	19	24	28	38	44	59	67	82	90	107	128	157	166	195	225	

注: 以上表格数据均为卧式热容量，其他安装型式请来电咨询。

额定热容量
Thermal Capacity

1. P2N. thermal capacity (horizontal assembly):

Type no / Wind speed P_{G1}	9	10	11	12	13	14	16	17	18	19/20	21/22	23/24	25/26	27/28	29/30	31/32	33/34
Small room to installation Wind speed≥0.5m/s	21	26	32	42	49	65	75	92	100	119	142	174	201	242	278	326	366
Big working room installation Wind speed≥1.4m/s	29	37	45	60	69	92	106	130	147	169	201	246	285	343	406	462	519
Outdoor installation Wind speed≥3.7m/s	39	50	60	80	93	125	143	175	191	228	272	333	386	464	505	626	702

2. P2S. thermal capacity (horizontal assembly):

Type no / Wind speed P_{G1}	9	10	11	12	13	14	16	17	18	19/20	21/22	23/24	25/26	27/28	29/30	31/32	33/34
Small room to installation Wind speed≥0.5m/s	15	20	24	32	36	49	56	69	75	89	106	130	151	182	215	245	275
Big working room installation Wind speed≥1.4m/s	22	28	34	45	52	69	79	97	106	127	151	185	214	257	305	347	389
Outdoor installation Wind speed≥3.7m/s	29	38	45	60	70	94	107	132	143	171	204	250	289	348	412	469	527

3. P3N. thermal capacity (horizontal assembly):

Type no / Wind speed P_{G1}	9	10	11	12	13	14	16	17	18	19/20	21/22	23/24	25/26	27/28	29/30	31/32	33/34
Small room to installation Wind speed≥0.5m/s	14	18	22	29	34	46	52	64	70	83	99	121	241	169	200	228	256
Big working room installation Wind speed≥1.4m/s	20	26	31	41	48	64	74	91	99	118	140	172	199	240	284	323	362
Outdoor installation Wind speed≥3.7m/s	28	35	42	56	65	87	100	123	133	159	190	233	269	324	384	437	490

4. P3S. thermal capacity (horizontal assembly):

Type no / Wind speed P_{G1}	9	10	11	12	13	14	16	17	18	19/20	21/22	23/24	25/26	27/28	29/30	31/32	33/34
Small room to installation Wind speed≥0.5m/s	12	15	18	24	28	40	43	53	57	69	82	100	116	139	165	188	211
Big working room installation Wind speed≥1.4m/s	17	21	26	34	40	53	61	75	81	97	116	142	164	197	234	166	298
Outdoor installation Wind speed≥3.7m/s	23	29	35	46	54	72	82	101	110	131	156	192	222	267	316	360	404

额定热容量
Thermal Capacity

5. P2L. thermal capacity (horizontal assembly):

Type no / Wind speed / P_{G1}	9	10	11	12	13	14	16	17	18	19/20	21/22	23/24	25/26	27/28	29/30	31-34
Small room to installation Wind speed≥0.5m/s	14	18	22	29	34	46	52	64	70	83	99	121	141	169	200	According to customer requirements supply commodity
Big working room installation Wind speed≥1.4m/s	20	26	31	41	48	64	74	91	99	118	140	172	199	240	284	
Outdoor installation Wind speed≥3.7m/s	28	35	42	56	65	87	100	123	133	159	190	233	269	324	384	

6. P2K. thermal capacity (horizontal assembly):

Type no / Wind speed / P_{G1}	9	10	11	12	13	14	16	17	18	19/20
Small room to installation Wind speed≥0.5m/s	12	15	18	24	28	38	44	53	58	69
Big working room installation Wind speed≥1.4m/s	17	22	26	35	40	54	62	76	82	98
Outdoor installation Wind speed≥3.7m/s	23	29	35	47	54	73	83	102	111	133

6. P3K. thermal capacity (horizontal assembly):

Type no / Wind speed / P_{G1}	9	10	11	12	13	14	16	17	18	19/20	21/22	23/24	25/26	27/28	29/30	31/34
Small room to installation Wind speed≥0.5m/s	10	12	15	20	23	31	35	43	47	56	67	82	95	109	125	According to customer requirements supply commodity
Big working room installation Wind speed≥1.4m/s	14	17	21	28	33	44	50	61	66	79	95	116	106	125	144	
Outdoor installation Wind speed≥3.7m/s	19	24	28	38	44	59	67	82	90	107	128	157	166	195	225	

Note: the above table data are horizontal heat capacity, the other mounting type call advisory

外形尺寸图表
Out Dimensions Table

P2NA i_N = 25...40

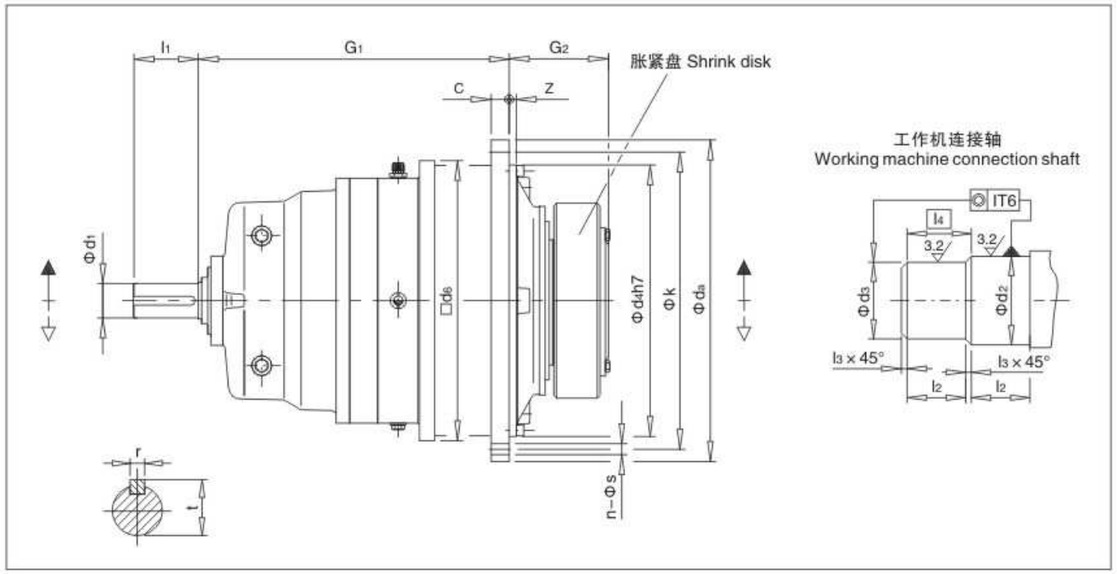

P2NA 机座号 Type No	额定输出扭矩 Nominal output torque T2N (N・M)	输入轴尺寸 Input shaft size				d2	d3	l2	l3	l4	c	da	d4	d6	G1	G2	k	z	法兰孔尺寸 Flange hole		重量 Weight (kg)	油量 Oil liter (l)
		d1	l1	r	t															n		
9	22000	55	90	16	59	120	115	65	2.5	67.5	24	428	350	356	469	165	388	6 ± 1.5	18	24	145	6
10	31000	55	90	16	59	130	125	70	2.5	72.5	28	472	394	400	489	174	436	6 ± 1.5	18	28	195	8
11	42000	70	120	20	74.5	140	135	82.5	2.5	85	32	525	425	436	579	204	485	6 ± 1.5	22	20	280	12
12	60000	70	120	20	74.5	160	155	90	2.5	92.5	34	605	495	510	593	224	555	9 ± 1.5	26	20	425	16
13	83000	80	140	25	85	180	175	95	2.5	97.5	39	645	535	554	714	241	595	11 ± 1.5	26	24	540	20
14	117000	80	140	25	85	210	205	105	2.5	107.5	42	720	610	629	737	278	665	9	26	32	805	32
16	160000	95	160	25	100	230	225	110	2.5	112.5	44	770	660	680	851	285	715	10	26	36	1030	40
17	202000	95	160	25	1000	250	245	120	2.5	122.5	50	895	750	775	877	294	830	10	33	24	1500	56
18	244000	110	180	28	116	260	255	120	2.5	122.5	50	930	785	815	1006	303	865	10	33	32	1900	66
19	295000	110	180	28	116	280	275	135	2.5	137.5	56	980	840	870	1029.5	327.5	915	12	33	36	2000	82
20	354000	110	180	28	116	300	295	135	2.5	137.5	56	980	840	870	1029.5	327.5	915	12	33	36	2100	75
21	392000	120	210	32	127	310	305	152	2.5	154.5	62	1115	935	960	1046	354	1025	24	39	32	2650	110
22	450000	120	210	32	137	330	325	152	2.5	154.5	62	1115	935	930	1046	354	1025	24	39	32	2800	95
23	513000	130	210	32	137	350	345	164	2.5	166.5	68	1210	1025	1056	1150	380	1120	28	39	36	3450	150
24	592000	130	210	32	137	360	355	164	2.5	166.5	68	1210	1025	1056	1150	380	1120	28	39	36	3900	125
25	684000	140	240	36	148	380	375	180	2.5	182.5	74	1320	1115	1150	1241	407	1220	29	45	36	4750	190
26	763000	140	240	36	148	400	395	180	2.5	182.5	74	1320	1115	1150	1241	407	1220	29	45	36	5150	160
27	852000	150	240	36	158	430	425	191	2.5	193.5	81	1460	1215	1248	1379	453	1345	31	52	32	61000	245
28	950000	150	240	36	158	450	445	191	2.5	193.5	81	1460	1215	1248	1379	453	1345	31	52	32	6550	205
29	1060000	160	270	40	169	460	450	197.5	5	202.5	87	1565	1320	1355	1457	483	1450	34	52	36	7800	305
30	1200000	160	270	40	169	480	470	197.5	5	202.5	87	1565	1320	1355	1457	483	1450	34	52	36	8300	255
31	1330000	170	270	40	179	480	470	232	5	237.0	94	1665	1400	1443	1607	538	1545	36	62	32	10200	380
32	1500000	170	270	40	179	510	500	232	5	237.0	94	1665	1400	1443	1607	538	1545	36	62	32	10700	315
33	1680000	180	310	40	179	530	520	242	5	247.0	100	1755	1495	1536	1683	573	1635	36	62	36	12350	460
34	1920000	180	310	45	190	570	560	242	5	247.0	100	1755	1495	1536	1683	573	1635	36	62	36	13150	380

注：1 当d1≤100时公差为m6，当d1＞100时公差为n6；
2 当尺寸d2或d3≤160时，公差为h6；
当尺寸d2或d3＞160时，公差为g6；
3 重量不包括胀紧盘和润滑油。

1. When d1≤100, tolerance is m6, d1＞100, tolerance is n6;
2. When d2 or d3≤160, tolerance is h6;
When d2 or d3＞16, tolerance is g6;
3. Weight is not including shrink disk and fabrication oil.

外形尺寸图表
Out Dimensions Table

P2LA　i_N =31.5...100

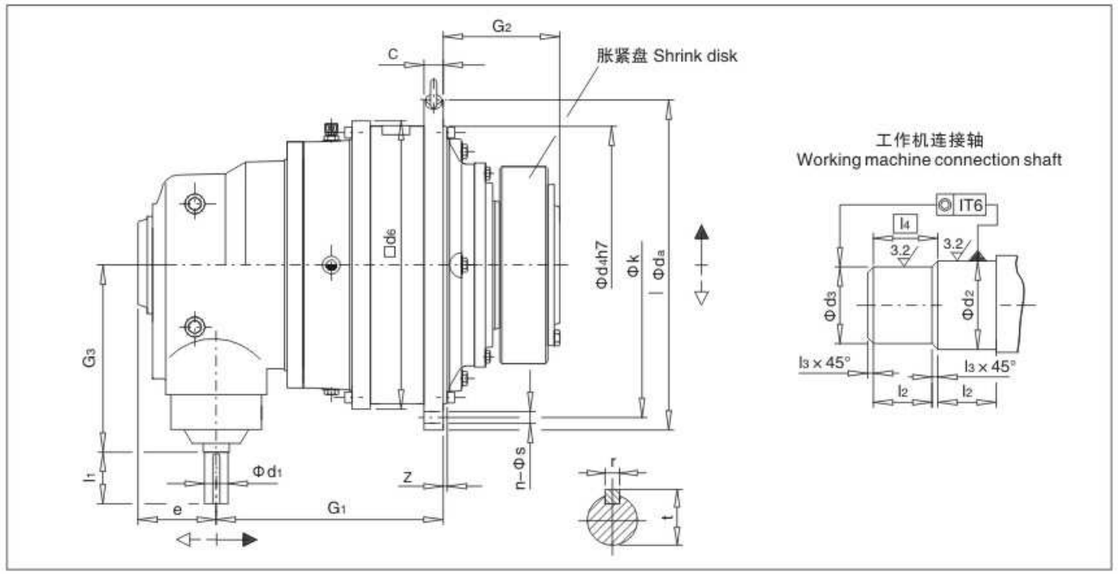

P2LA 机座号 Type No	额定输出扭矩 Nominal output torque T2N (N·M)	输入轴尺寸 Input shaft size								d2	d3	l2	l3	l4	c	da	d4	d6	e	G1	G2	G3	k	z	法兰孔尺寸 Flange hole		重量 Weight (kg)	油量 Oil liter (l)
		iN≤90				iN≥100																			s	n		
		d1	l1	r	t	d1	l1	r	t																			
9	22000	50	100	14	53.5	40	80	12	43	120	115	65	2.5	67.5	24	428	350	356	185	425	165	305	388	6±1.5	18	24	159	6
10	31000	50	100	14	53.5	40	80	12	43	130	125	70	2.5	72.5	28	472	394	400	185	445	174	305	436	6±1.5	18	28	215	8
11	42000	60	110	18	64	50	100	14	53.5	140	135	82.5	2.5	85	32	525	425	436	210	501	204	350	485	6±1.5	22	20	310	12
12	60000	60	110	18	64	50	100	14	53.5	160	155	90	2.5	92.5	34	605	495	510	210	515	224	350	555	9±1.5	26	20	470	16
13	83000	75	135	20	79.5	60	110	18	64	180	175	95	2.5	97.5	39	645	535	554	250	619	241	415	595	11±1.5	26	24	595	20
14	117000	75	135	20	79.5	60	110	18	64	210	205	105	2.5	107.5	42	720	610	629	250	642	278	415	665	9	26	32	890	32
16	160000	85	165	22	90	70	140	20	74.5	230	225	110	2.5	112.5	44	770	660	680	295	705	285	490	715	10	26	36	1137	40
17	202000	85	165	22	90	70	140	20	74.5	250	245	120	2.5	122.5	50	895	750	775	295	731	294	490	830	10	33	24	1660	56
18	244000	95	165	25	100	75	140	20	79.5	260	255	120	2.5	122.5	50	930	785	815	350	882	303	605	865	10	33	32	2100	66
19	295000	95	165	25	100	75	140	20	79.5	280	275	135	2.5	137.5	56	980	840	870	350	905.5	327.5	605	915	12	33	36	2200	82
20	354000	95	165	25	100	75	140	20	79.5	300	295	135	2.5	137.5	56	980	840	870	350	905.5	327.5	605	915	12	33	36	2300	75
21	392000	115	205	32	122	90	170	25	95	310	305	152	2.5	154.5	62	1115	935	960	400	996	354	700	1025	24	39	32	2930	110
22	450000	115	205	32	122	90	170	25	95	330	325	152	2.5	154.5	62	1115	935	930	400	996	354	700	1025	24	39	32	3100	95
23	513000	115	205	32	122	90	170	25	95	350	345	164	2.5	166.5	68	1210	1025	1056	400	1055	380	700	1120	28	39	36	3800	150
24	592000	115	205	32	122	90	170	25	95	360	355	164	2.5	166.5	68	1210	1025	1056	400	1055	380	700	1120	28	39	36	4300	125
25	684000	140	245	36	148	110	210	28	116	380	375	180	2.5	182.5	74	1320	1115	1150	475	1138	407	835	1220	29	45	36	52500	190
26	763000	140	245	36	148	110	210	28	116	400	395	180	2.5	182.5	74	1320	1115	1150	475	1138	407	835	1220	29	45	36	5660	160
27	852000	140	245	36	148	110	210	28	116	430	425	191	2.5	193.5	81	1460	1215	1248	475	1272	453	835	1345	31	52	32	6680	245
28	950000	140	245	36	148	110	210	28	116	450	445	191	2.5	193.5	81	1460	1215	1248	475	1272	453	835	1345	31	52	32	7180	205
29	1060000	150	245	40	169	115	210	32	122	460	450	197.5	5	202.5	87	1565	1320	1355	530	1367	483	945	1450	34	52	36	8500	305
30	1200000	150	245	40	169	115	210	32	122	480	470	197.5	5	202.5	87	1565	1320	1355	530	1367	483	945	1450	34	52	36	9070	255
31-34	按客户要求供货 According to customer requirements supply commodity																											

注：1　当d1≤100时公差为m6，当d1＞100时公差为n6；
　　2　当尺寸d2或d3≤160时，公差为h6；
　　当尺寸d2或d3＞160时，公差为g6；
　　3　重量不包括胀紧盘和润滑油。

1. When d1≤100, tolerance is m6, d1＞100, tolerance is n6;
2. When d2 or d3≤160, tolerance is h6;
When d2 or d3＞16, tolerance is g6;
3. Weight is not including shrink disk and fabrication oil.

外形尺寸图表
Out Dimensions Table

P2SA　i_N = 45...125

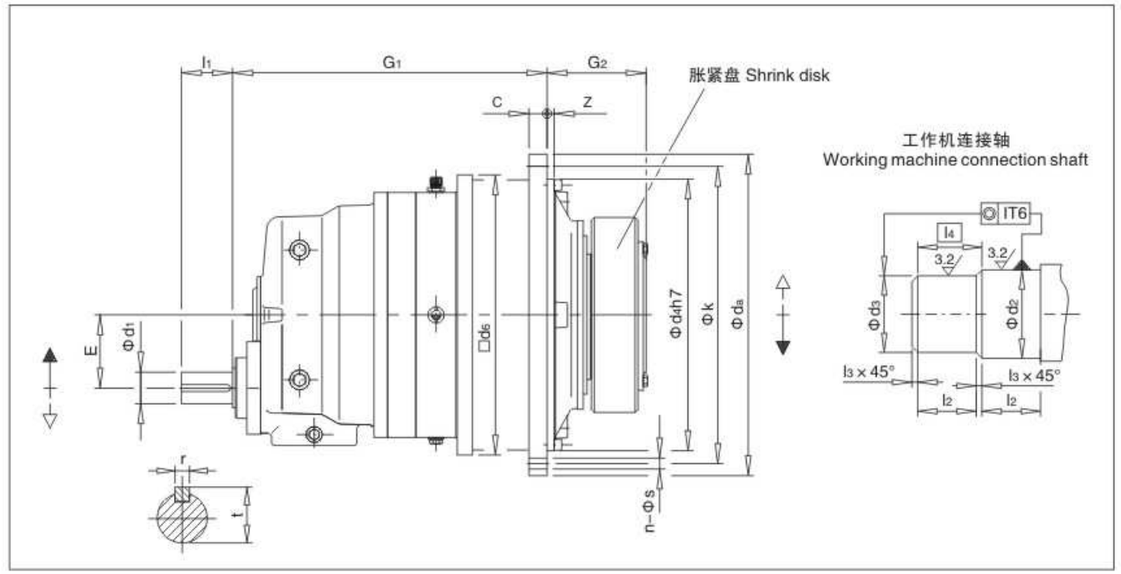

P2SA 机座号 Type No	额定输出扭矩 Nominal output torque T2N (N·M)	输入轴尺寸 Input shaft size				d2	d3	l2	l3	l4	c	da	d4	d6	E	G1	G2	k	z	法兰孔尺寸 Flange hole		重量 Weight (kg)	油量 Oil liter (l)
		d1	l1	r	t															s	n		
9	22000	38	60	10	41	120	115	65	2.5	67.5	24	428	350	356	90	469	165	388	6±1.5	18	24	160	6
10	31000	38	60	10	41	130	125	70	2.5	72.5	28	472	394	400	90	489	174	436	6±1.5	18	28	220	8
11	42000	55	90	16	59	140	135	82.5	2.5	85	32	525	425	436	115	579	204	485	6±1.5	22	20	310	12
12	60000	55	90	16	59	160	155	90	2.5	92.5	34	605	495	510	115	593	224	555	9±1.5	26	20	470	16
13	83000	70	120	20	74.5	180	175	95	2.5	97.5	39	645	535	554	140	714	241	595	11±1.5	26	24	600	20
14	117000	70	120	20	74.5	210	205	105	2.5	107.5	42	720	610	629	140	737	278	665	9	26	32	900	32
16	160000	80	140	25	85	230	225	110	2.5	112.5	44	770	660	680	170	851	285	715	10	26	36	1150	40
17	202000	80	140	25	85	250	245	120	2.5	122.5	50	895	750	775	170	877	294	830	10	33	24	1650	56
18	244000	90	160	25	95	260	255	120	2.5	122.5	50	930	785	815	200	1006	303	865	10	33	32	1950	66
19	295000	90	160	25	95	280	275	135	2.5	137.5	56	980	840	870	200	1029.5	327.5	915	12	33	36	2400	82
20	354000	90	160	25	95	300	295	135	2.5	137.5	56	980	840	870	200	1029.5	327.5	915	12	33	36	2500	75
21	392000	100	180	28	106	310	305	152	2.5	154.5	62	1115	935	960	230	1076	354	1025	24	39	32	2900	110
22	450000	100	180	28	106	330	325	152	2.5	154.5	62	1115	935	930	230	1076	354	1025	24	39	32	3100	95
23	513000	120	210	32	127	350	345	164	2.5	166.5	68	1210	1025	1056	265	1175	380	1120	28	39	36	3800	150
24	592000	120	210	32	127	360	355	164	2.5	166.5	68	1210	1025	1056	265	1175	380	1120	28	39	36	4100	125
25	684000	130	210	32	137	380	375	180	2.5	182.5	74	1320	1115	1150	300	1291	407	1220	29	45	36	4950	190
26	763000	130	210	32	137	400	395	180	2.5	182.5	74	1320	1115	1150	300	1291	407	1220	29	45	36	5350	160
27	852000	140	240	36	148	430	425	191	2.5	193.5	81	1460	1215	1248	320	1429	453	1345	31	52	32	6800	245
28	950000	140	240	36	148	450	445	191	2.5	193.5	81	1460	1215	1248	320	1429	453	1345	31	52	32	7200	205
29	1060000	150	240	36	158	460	450	197.5	5	202.5	87	1565	1320	1355	360	1507	483	1450	34	52	36	8500	305
30	1200000	150	240	36	158	480	470	197.5	5	202.5	87	1565	1320	1355	360	1507	483	1450	34	52	36	9000	255
31	1330000	160	270	40	169	480	470	232	5	237.0	94	1665	1400	1443	400	1662	538	1545	36	62	32	10500	380
32	1500000	160	270	40	169	510	500	232	5	237.0	94	1665	1400	1443	400	1662	538	1545	36	62	32	11200	315
33	1680000	170	270	40	179	530	520	242	5	247.0	100	1755	1495	1536	400	1743	573	1635	36	62	36	12700	460
34	1920000	170	270	40	179	570	560	242	5	247.0	100	1755	1495	1536	400	1743	573	1635	36	62	36	13500	380

注：1　当d1≤100时公差为m6，当d1＞100时公差为n6；
　　2　当尺寸d2或d3≤160时，公差为h6；
　　当尺寸d2或d3＞160时，公差为g6；
　　3　重量不包括胀紧盘和润滑油。

1. When d1≤100, tolerance is m6, d1＞100, tolerance is n6;
2. When d2 or d3≤160, tolerance is h6;
When d2 or d3＞16, tolerance is g6;
3. Weight is not including shrink disk and fabrication oil.

外形尺寸图表
Out Dimensions Table

P2KA　i_N = 112...500

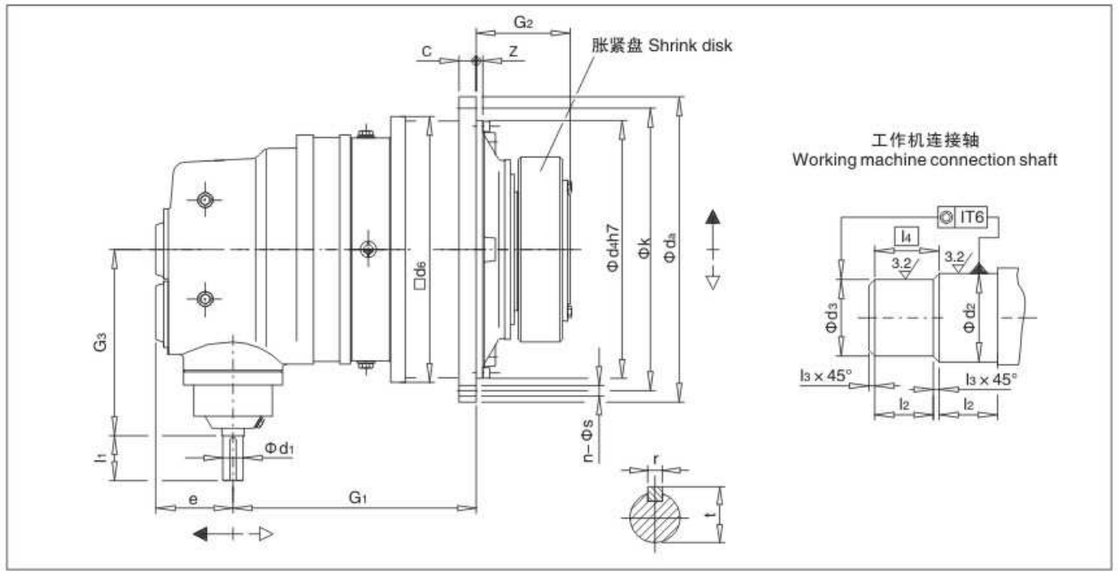

P2KA 机座号 Type No	额定输出扭矩 Nominal output torque T2N (N·M)	输入轴尺寸 Input shaft size								d2	d3	l2	l3	l4	c	da	d4	d6	e	G1	G2	G3	k	z	法兰孔尺寸 Flange hole		重量 Weight (kg)	油量 Oil liter (l)
		iN≤2000				iN≥2240																			s	n		
		d1	l1	r	t	d1	l1	r	t																			
9	22000	35	70	10	38	30	60	8	33	120	115	65	2.5	67.5	24	428	350	356	119	339	165	320	388	6 ± 1.5	18	24	165	6
10	31000	35	70	10	38	30	60	8	33	130	125	70	2.5	72.5	28	472	394	400	119	359	174	320	436	8 ± 1.5	18	28	227	8
11	42000	45	80	14	48.5	35	60	10	38	140	135	82.5	2.5	85	32	525	425	436	137	419	204	375	485	8 ± 1.5	22	20	320	12
12	60000	45	80	14	48.5	35	60	10	38	160	155	90	2.5	92.5	34	605	495	510	137	433	224	375	555	9 ± 1.5	26	20	464	16
13	83000	50	100	14	53.5	40	80	12	43	180	175	95	2.5	97.5	39	645	535	554	172	518.5	241	445	595	11 ± 1.5	26	24	618	20
14	117000	50	100	14	53.5	40	80	12	43	210	205	105	2.5	107.5	42	720	610	629	172	541.5	278	445	665	9	26	32	927	32
16	160000	60	110	18	64	50	100	14	53.5	230	225	110	2.5	112.5	44	770	660	680	194	632	285	520	715	10	26	36	1184	40
17	202000	60	110	18	64	50	100	14	53.5	250	245	120	2.5	122.5	50	895	750	775	194	658	294	520	830	10	33	24	1700	56
18	244000	75	135	20	79.5	60	110	18	64	260	255	120	2.5	122.5	50	930	785	815	240	741.5	303	615	865	10	33	32	2010	73
19	295000	75	135	20	79.5	60	110	18	64	280	275	135	2.5	137.5	56	980	840	870	240	764.5	327.5	615	915	12	33	36	2470	82
20	354000	75	135	20	79.5	60	110	18	64	300	295	135	2.5	137.5	56	980	840	870	240	764.5	327.5	615	915	12	33	36	2550	75
21-26	按客户要求供货 According to customer requirements supply commodity																											

注：1 当d1≤100时公差为m6，当d1＞100时公差为n6；
2 当尺寸d2或d3≤160时，公差为h6；
当尺寸d2或d3＞160时，公差为g6；
3 重量不包括胀紧盘和润滑油。

1. When d1≤100, tolerance is m6, d1＞100, tolerance is n6;
2. When d2 or d3≤160, tolerance is h6;
When d2 or d3＞16, tolerance is g6;
3. Weight is not including shrink disk and fabrication oil.

外形尺寸图表
Out Dimensions Table

P3NA　i_N = 140...280

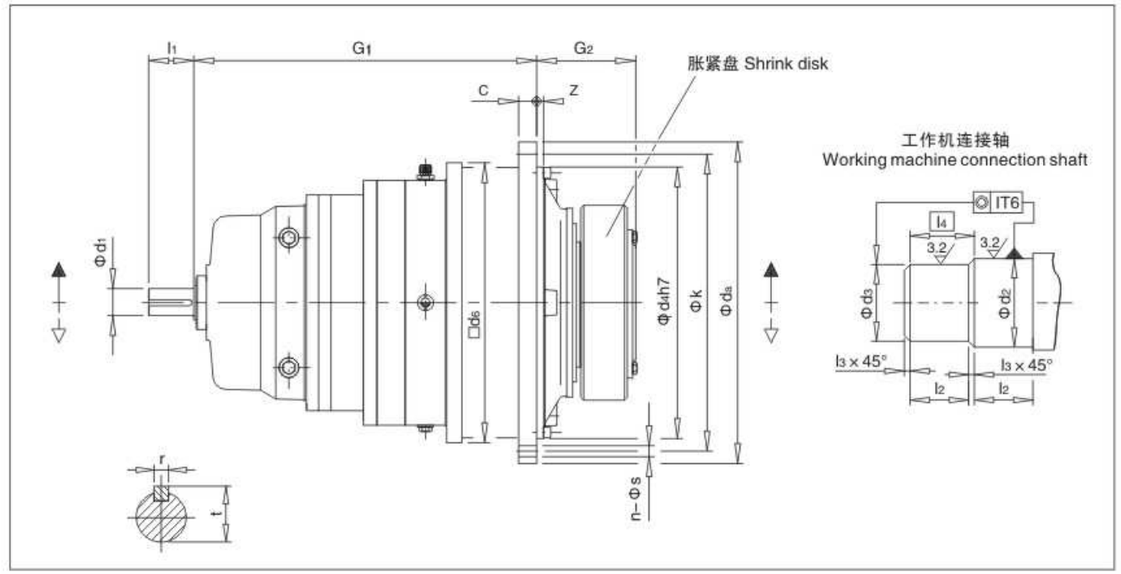

P3NA 机座号 Type No	额定输出扭矩 Nominal output torque T2N (N·M)	输入轴尺寸 Input shaft size				d2	d3	l2	l3	l4	c	da	d4	d6	E	G1	G2	k	z	法兰孔尺寸 Flange hole		重量 Weight (kg)	油量 Oil liter (l)
		d1	l1	r	t															s	n		
9	22000	55	90	16	59	120	115	65	2.5	67.5	24	428	350	356	90	565	165	388	6 ± 1.5	18	24	152	7
10	31000	55	90	16	59	130	125	70	2.5	72.5	28	472	394	400	90	585	174	436	6 ± 1.5	18	28	205	9
11	42000	55	90	16	59	140	135	82.5	2.5	85	32	525	425	436	90	616	204	485	6 ± 1.5	22	20	295	13
12	60000	55	90	16	59	160	155	90	2.5	92.5	34	605	495	510	90	630	224	555	9 ± 1.5	26	20	447	17
13	83000	55	90	16	59	180	175	95	2.5	97.5	39	645	535	554	90	688	241	595	11 ± 1.5	26	24	567	21
14	117000	55	90	16	59	210	205	105	2.5	107.5	42	720	610	629	90	711	278	665	9	26	32	850	33
16	160000	70	120	20	74.5	230	225	110	2.5	112.5	44	770	660	680	115	853	285	715	10	26	36	1085	42
17	202000	70	120	20	74.5	250	245	120	2.5	122.5	50	895	750	775	115	879	294	830	10	33	24	1580	60
18	244000	80	140	25	85	260	255	120	2.5	122.5	50	930	785	815	140	1013.5	303	865	10	33	32	2000	70
19	295000	80	140	25	85	280	275	135	2.5	137.5	56	980	840	870	140	1036.5	327.5	915	12	33	36	2100	85
20	354000	80	140	25	85	300	295	135	2.5	137.5	56	980	840	870	140	1036.5	327.5	915	12	33	36	2200	75
21	392000	80	140	25	85	310	305	152	2.5	154.5	62	1115	935	960	140	1093	354	1025	24	39	32	2785	115
22	450000	80	140	25	85	330	325	152	2.5	154.5	62	1115	935	930	140	1093	354	1025	24	39	32	2950	105
23	513000	95	160	25	100	350	345	164	2.5	166.5	68	1210	1025	1056	170	1222	380	1120	28	39	36	3625	155
24	592000	95	160	25	100	360	355	164	2.5	166.5	68	1210	1025	1056	170	1222	380	1120	28	39	36	4100	135
25	684000	95	160	25	100	380	375	180	2.5	182.5	74	1320	1115	1150	170	1284	407	1220	29	45	36	5000	195
26	763000	95	160	25	100	400	395	180	2.5	182.5	74	1320	1115	1150	170	1284	407	1220	29	45	36	5400	170
27	852000	110	180	28	116	430	425	191	2.5	193.5	81	1460	1215	1248	200	1470	453	1345	31	52	32	6400	250
28	950000	110	180	28	116	450	445	191	2.5	193.5	81	1460	1215	1248	200	1470	453	1345	31	52	32	6875	220
29	1060000	110	180	28	116	460	450	197.5	5	202.5	87	1565	1320	1355	200	1517	483	1450	34	52	36	8190	310
30	1200000	110	180	28	116	480	480	197.5	5	202.5	87	1565	1320	1355	200	1517	483	1450	34	52	36	8715	280
31	1330000	120	210	32	127	480	480	232	5	237.0	94	1665	1400	1443	230	1585	540	1545	36	62	32	10700	390
32	1500000	120	210	32	127	510	510	232	5	237.0	94	1665	1400	1443	230	1585	540	1545	36	62	32	11200	360
33	1680000	130	210	32	137	530	530	242	5	247.0	100	1755	1495	1536	265	1710	573	1635	36	62	36	12950	470
34	1920000	130	210	32	137	570	570	242	5	247.0	100	1755	1495	1536	265	1710	573	1635	36	62	36	13800	430

注：1 当d1≤100时公差为m6，当d1＞100时公差为n6；
2 当尺寸d2或d3≤160时，公差为h6；
当尺寸d2或d3＞160时，公差为g6；
3 重量不包括胀紧盘和润滑油。

1. When d1≤100, tolerance is m6, d1＞100, tolerance is n6;
2. When d2 or d3≤160, tolerance is h6;
When d2 or d3＞16, tolerance is g6;
3. Weight is not including shrink disk and fabrication oil.

外形尺寸图表
Out Dimensions Table

P3SA　i_N = 280…900

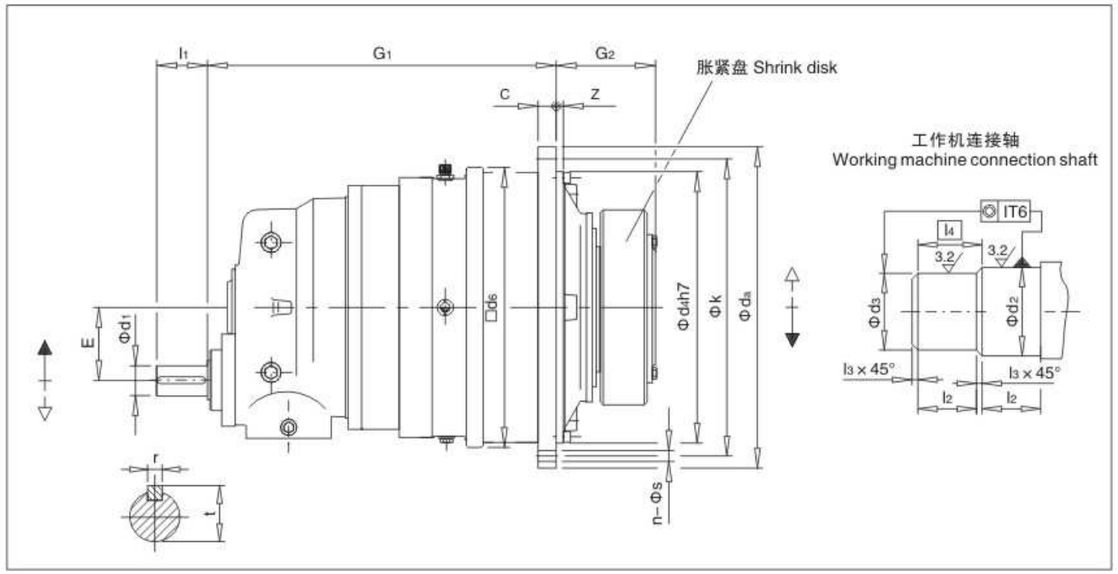

P3SA 机座号 Type No	额定输出扭矩 Nominal output torque T2N (N·M)	输入轴尺寸 Input shaft size				d2	d3	l2	l3	l4	c	da	d4	d6	E	G1	G2	k	z	法兰孔尺寸 Flange hole		重量 Weight (kg)	油量 Oil liter (l)
		d1	l1	r	t															s	n		
9	22000	38	60	10	41	120	115	65	2.5	67.5	24	428	350	356	90	565	165	388	6 ± 1.5	18	24	170	7
10	31000	38	60	10	41	130	125	70	2.5	72.5	28	472	394	400	90	585	174	436	8 ± 1.5	18	28	230	9
11	42000	38	60	10	41	140	135	82.5	2.5	85	32	525	425	436	90	616	204	485	8 ± 1.5	22	20	310	13
12	60000	38	60	10	41	160	155	90	2.5	92.5	34	605	495	510	90	500	224	555	9 ± 1.5	26	20	160	17
13	83000	38	60	10	41	180	175	95	2.5	97.5	39	645	535	554	90	568	241	595	11 ± 1.5	26	24	584	21
14	117000	38	60	10	41	210	205	105	2.5	107.5	42	720	610	629	90	711	278	665	9	26	32	875	33
16	160000	55	90	16	59	230	225	110	2.5	112.5	44	770	660	680	115	853	285	715	10	26	36	1115	42
17	202000	55	90	16	59	250	245	120	2.5	122.5	50	895	750	775	115	879	294	830	10	33	24	1625	60
18	244000	70	120	20	74.5	260	255	120	2.5	122.5	50	930	785	815	140	1013.5	303	865	10	33	32	2060	70
19	295000	70	120	20	74.5	280	275	135	2.5	137.5	56	980	840	870	140	1036.5	327.5	915	12	33	36	2160	85
20	354000	70	120	20	74.5	300	295	135	2.5	137.5	56	980	840	870	140	1036.5	327.5	915	12	33	36	2260	75
21	392000	70	120	20	74.5	310	305	152	2.5	154.5	62	1115	935	960	140	1093	354	1025	24	39	32	2870	115
22	450000	70	120	20	74.5	330	325	152	2.5	154.5	62	1115	935	960	140	1093	354	1025	24	39	32	3040	105
23	513000	80	140	25	85	350	345	164	2.5	166.5	68	1210	1025	1056	170	1222	380	1120	28	39	36	3730	155
24	592000	80	140	25	85	360	355	164	2.5	166.5	68	1210	1025	1056	170	1222	380	1120	28	39	36	4220	135
25	684000	80	140	25	85	380	375	180	2.5	182.5	74	1320	1115	1150	170	1284	407	1220	29	45	36	5150	195
26	763000	80	140	25	85	400	395	180	2.5	182.5	74	1320	1115	1150	170	1284	407	1220	29	45	36	5560	170
27	852000	90	160	25	95	430	425	191	2.5	193.5	81	1460	1215	1248	200	1470	453	1345	31	52	32	6580	250
28	950000	90	160	25	95	450	445	191	2.5	193.5	81	1460	1215	1248	200	1470	453	1345	31	52	32	7080	220
29	1060000	90	160	25	95	460	450	197.5	5	202.5	87	1565	1320	1355	200	1517	483	1450	34	52	36	8400	310
30	1200000	90	160	25	95	480	470	197.5	5	202.5	87	1565	1320	1355	200	1517	483	1450	34	52	36	8970	280
31	1330000	100	180	28	100	480	470	232	5	237.0	94	1665	1400	1443	230	1617	538	1545	36	62	32	11000	390
32	1500000	100	180	28	106	510	500	232	5	237.0	94	1665	1400	1443	230	1617	538	1545	36	62	32	11500	360
33	1680000	120	210	32	127	530	520	242	5	247.0	100	1755	1495	1536	265	1735	573	1635	36	62	36	13300	470
34	1920000	120	210	32	127	570	560	242	5	247.0	100	1755	1495	1536	265	1735	573	1635	36	62	36	14200	430

注：1 当d1≤100时公差为m6，当d1＞100时公差为n6；
2 当尺寸d2或d3≤160时，公差为h6；
当尺寸d2或d3＞160时，公差为g6；
3 重量不包括胀紧盘和润滑油。

1. When d1≤100, tolerance is m6, d1＞100, tolerance is n6;
2. When d2 or d3≤160, tolerance is h6;
When d2 or d3＞16, tolerance is g6;
3. Weight is not including shrink disk and fabrication oil.

外形尺寸图表
Out Dimensions Table

P3KA　i_N = 560…4000

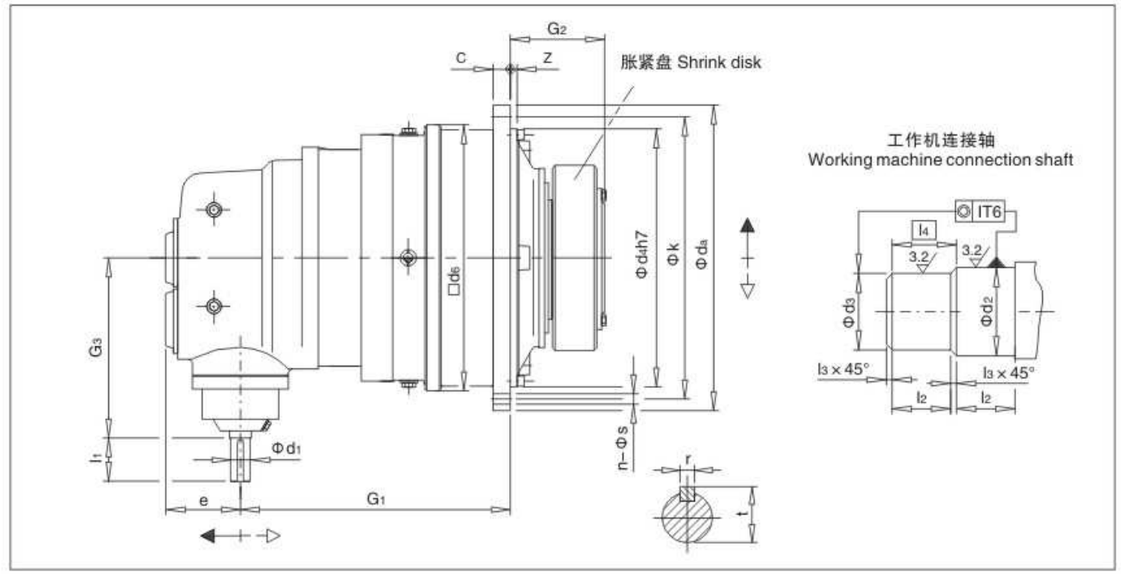

P3KA 机座号 Type No	额定输出扭矩 Nominal output torque T2N (N·M)	输入轴尺寸 Input shaft size								d2	d3	l2	l3	l4	c	da	d4	d6	e	G1	G2	G3	k	z	法兰孔尺寸 Flange hole		重量 Weight (kg)	油量 Oil liter (l)
		iN≤2000				iN≥2240																						
		d1	l1	r	t	d1	l1	r	t																s	n		
9	22000	35	70	10	38	30	60	8	33	120	115	65	2.5	67.5	24	428	350	356	119	435	165	320	388	6 ± 1.5	18	24	180	7
10	31000	35	70	10	38	30	60	8	33	130	125	70	2.5	72.5	28	472	394	400	119	455	174	320	436	8 ± 1.5	18	28	240	9
11	42000	35	70	10	38	30	60	8	33	140	135	82.5	2.5	85	32	525	425	436	119	486	204	320	485	8 ± 1.5	22	20	315	15
12	60000	35	70	10	38	30	60	8	33	160	155	90	2.5	92.5	34	605	495	510	119	500	224	320	555	9 ± 1.5	26	20	470	20
13	83000	35	70	10	38	30	60	8	33	180	175	95	2.5	97.5	39	645	535	554	119	568	241	320	595	11 ± 1.5	26	24	595	21
14	117000	35	70	10	38	30	60	8	33	210	205	105	2.5	107.5	42	720	610	629	119	581	278	320	665	9	26	32	890	33
16	160000	45	80	14	48.5	35	60	10	38	230	225	110	2.5	112.5	44	770	660	680	137	693	285	375	715	10	26	36	1137	42
17	202000	45	80	14	48.5	35	60	10	38	250	245	120	2.5	122.5	50	895	750	775	137	719	294	375	830	10	33	24	1660	60
18	244000	50	100	14	53.5	40	80	12	43	260	255	120	2.5	122.5	50	930	785	815	172	818	303	445	865	10	33	32	2100	70
19	295000	50	100	14	53.5	40	80	12	43	280	275	135	2.5	137.5	56	980	840	870	172	841	327.5	445	915	12	33	36	2200	85
20	354000	50	100	14	53.5	40	80	12	43	300	295	135	2.5	137.5	56	980	840	870	172	841	327.5	445	915	12	33	36	2300	75
21	392000	50	100	14	53.5	40	80.	12	43	310	305	152	2.5	154.5	62	1115	935	960	172	897.5	354	445	1025	24	39	32	2930	115
22	450000	50	100	14	53.5	40	80	12	43	330	325	152	2.5	154.5	62	1115	935	960	172	897.5	354	445	1025	24	39	32	3100	105
23	513000	60	110	18	64	50	100	14	53.5	350	345	164	2.5	166.5	68	1210	1025	1056	194	1003	380	520	1120	28	39	36	3800	155
24	592000	60	110	18	64	50	100	14	53.5	360	355	164	2.5	166.5	68	1210	1025	1056	194	1003	380	520	1120	28	39	36	4300	135
25	684000	60	110	18	64	50	100	14	53.5	380	375	180	2.5	182.5	74	1320	1115	1150	194	1065	407	520	1220	29	45	36	5250	195
26	763000	60	110	18	64	50	100	14	53.5	400	395	180	2.5	182.5	74	1320	1115	1150	194	1065	407	520	1220	29	45	36	5660	170
27	852000	75	135	20	79.5	60	110	18	64	430	425	191	2.5	193.5	81	1460	1215	1248	240	1205.5	453	615	1345	31	52	32	6680	250
28	950000	75	135	20	79.5	60	110	18	64	450	445	191	2.5	193.5	81	1460	1215	1248	240	1205.5	453	615	1345	31	52	32	7180	220
29	1060000	75	135	20	79.5	60	110	18	64	460	450	197.5	5	202.5	87	1565	1320	1355	240	1252.5	483	615	1450	34	52	36	8500	310
30	1200000	75	135	20	79.5	60	110	18	64	480	470	197.5	5	202.5	87	1565	1320	1355	240	1252.5	483	615	1450	34	52	36	9170	280

注：1 当d1≤100时公差为m6，当d1＞100时公差为n6；
2 当尺寸d2或d3≤160时，公差为h6；
当尺寸d2或d3＞160时，公差为g6；
3 重量不包括胀紧盘和润滑油。

1. When d1≤100, tolerance is m6, d1＞100, tolerance is n6;
2. When d2 or d3≤160, tolerance is h6;
When d2 or d3＞16, tolerance is g6;
3. Weight is not including shrink disk and fabrication oil.

组合型
Matched Units

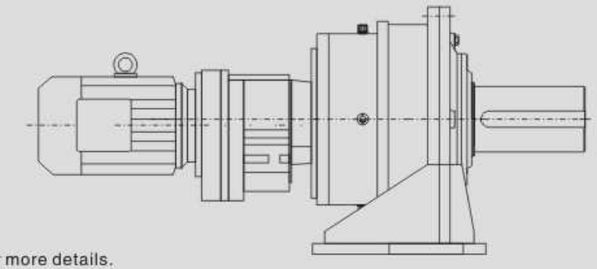

P../R组合，详情来电咨询
P../Rmatch,please inquiry for more details.

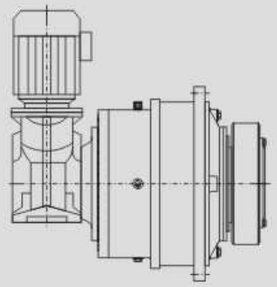

P../K组合，详情来电咨询
P../Kmatch, please inquiry for more details.

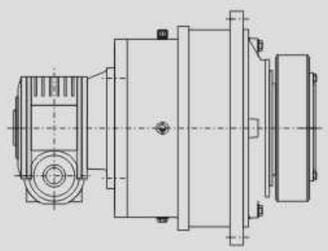

P../RV(160-250)组合，详情来电咨询
P../RV match, please inquiry for more details.

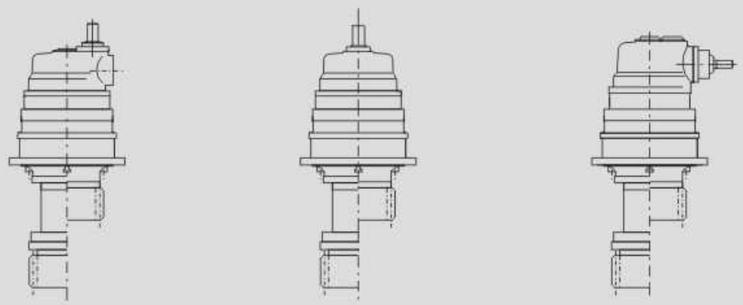

P../R组合，详情来电咨询
P../Rmatch, please inquiry
for more details.

输出法兰孔布置图
Output Flange Hole

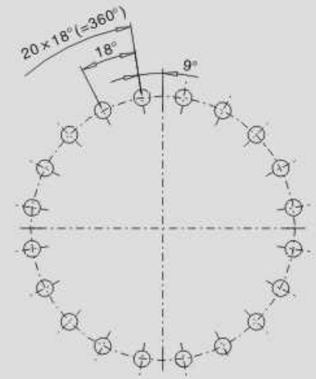

P...11,12

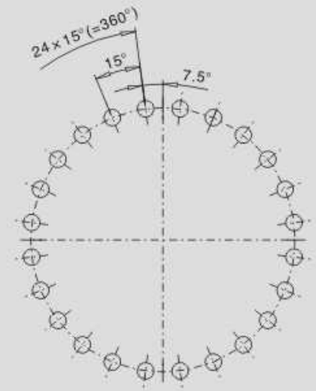

P...9,13,17

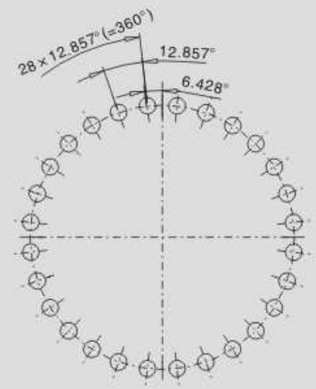

P...10

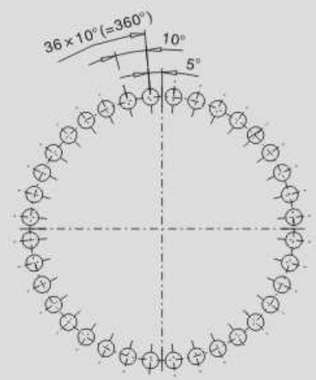

P...16,19,20,23,24,25,26,29,30,33,34

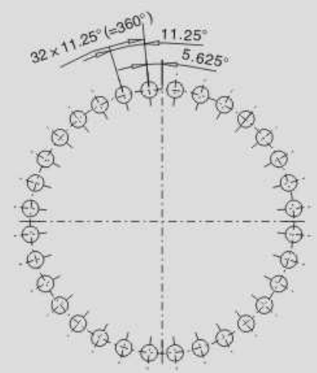

P...14,18,21,22,27,28,31,32

输出轴
Output Shaft

1. 空心轴 Hollow shaft

带胀紧盘的空心输出轴
With shrink disk hollow shaft output shaft

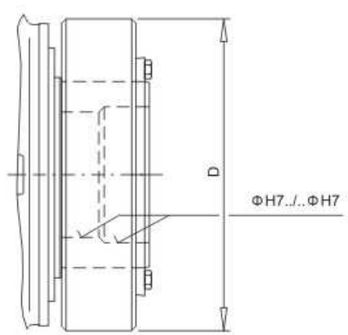

渐开线花键空心输出轴
Involute spline
hollow output shaft

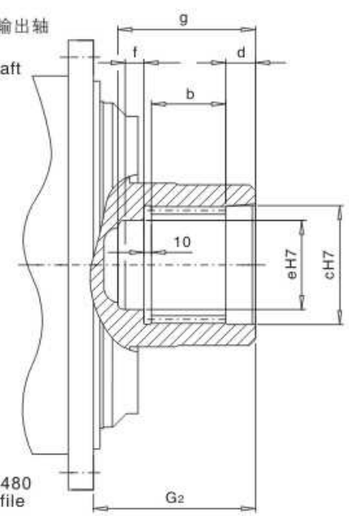

花键齿形按DIN5480
Spline tooth profile
by DIN5480

机座号 Type no	许用扭矩 Permissible torque T_{2N} (N·M)	胀紧盘 Shrink disk				空心花键输出轴 Hollow spline output shaft							
		型号 Type	D	螺栓 Bolt	重量 Weight	内花键规格 Inner spline specification	b	c	d	e	f	G_2	g
9	22000	155	263	M14	15.2	120×5×30×22×9H	70	122	40	107	20	165	150
10	31000	165	290	M16	21.5	130×5×30×24×9H	80	132	40	117	20	174	160
11	42000	185	320	M16	32.7	140×5×30×26×9H	90	142	45	125	25	204	180
12	60000	220	370	M20	53	160×5×30×30×9H	100	162	45	145	25	223	190
13	83000	240	405	M20	66	180×5×30×34×9H	110	182	45	165	25	237	200
14	117000	280	460	M20	103	210×5×30×40×9H	125	212	45	195	25	264	215
16	160000	300	485	M24	120	240×8×30×28×9H	140	242	50	220	25	285	235
17	202000	320	520	M24	138	250×8×30×30×9H	150	252	50	230	30	290	250
18	244000	340	570	M24	189	260×8×30×31×9H	160	262	50	240	30	303	260
19	295000	360	590	M24	207	280×8×30×34×9H	170	282	50	260	30	327.5	270
20	354000	380	640	M27	244	300×8×30×36×9H	180	302	50	280	30	327.5	280
21	392000	390	650	M27	249	310×8×30×37×9H	190	312	60	290	40	354	310
22	450000	420	670	M27	285	330×8×30×40×9H	200	332	60	310	40	354	320
23	513000	440	720	M27	357	340×8×30×41×9H	200	342	60	320	40	348	320
24	592000	460	770	M27	419	360×8×30×44×9H	220	362	60	340	40	368	340
25	684000	480	800	M30	492	380×8×30×46×9H	230	382	60	360	40	372	350
26	763000	500	850	M30	567	400×8×30×48×9H	240	402	60	380	40	382	360
27	852000	530	910	M30	744	440×8×30×54×9H	250	442	60	420	40	423	370
28	950000	560	940	M30	776	450×8×30×55×9H	260	452	65	430	40	428	385
29	1060000	560	940	M30	736	460×8×30×56×9H	270	462	65	440	45	433	400
30	1200000	590	960	M30	845	480×8×30×58×9H	285	482	65	460	45	448	415
31	1330000	590	960	M30	835								
32	1500000	620	1020	M30	1064								
33	1690000	660	1070	M33	1178								
34	1920000	700	1140	M33	1345								

输出轴
Output Shaft

2. 实心轴 Solid shaft

带平键的实心输出轴 Solid Output Shaft with Parallel Key

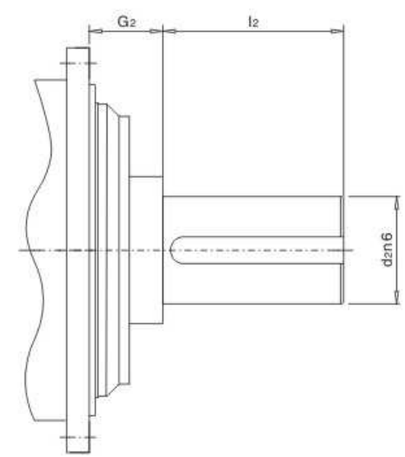

渐开线花键实心输出轴 Solid Output Shaft with Involute Splines

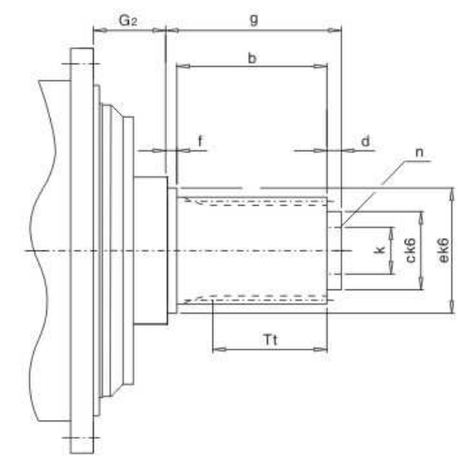

花键齿形按DIN5480 Spline tooth profile by DIN5480

机座号 Type no	许用扭矩 Permissible torque T_{2N} (N·M)	带平键实心轴 With even key solid shaft			实心花键输出轴 Solid spline output										
		d_2	l_2	G_2	外花键规格 Outer spline specification	Tt	b	c	d	e	f	g	k	n	G_2
9	22000	120	210	95	130×5×30×24×8m	70	80	110	20	132	20	120	80	3×M16×24	95
10	31000	130	210	95	140×5×30×26×8m	80	90	120	20	142	20	130	90	3×M16×24	95
11	42000	150	240	109	160×5×30×30×8m	90	100	140	25	162	25	150	110	3×M16×24	109
12	60000	160	270	106	180×5×30×34×8m	100	110	90	25	182	25	160	130	3×M16×24	106
13	83000	180	310	118	200×5×30×38×8m	110	120	100	30	202	25	175	140	3×M16×24	118
14	117000	210	350	139	220×5×30×42×8m	125	135	120	30	222	30	195	160	3×M16×24	139
16	160000	230	350	142	250×8×30×30×8m	140	155	140	35	252	30	220	185	3×M20×30	142
17	202000	250	400	139	260×8×30×31×8m	150	165	155	40	262	35	240	200	3×M20×30	139
18	244000	260	400	134	280×8×30×34×8m	160	175	170	40	282	35	250	215	3×M20×30	134
19	295000	280	450	148.5	300×8×30×36×8m	170	185	180	40	302	35	260	225	3×M20×30	148.5
20	354000	300	500	148.5	310×8×30×37×8m	180	195	190	40	312	35	270	235	6×M20×30	148.5
21	392000	310	500	158	320×8×30×38×8m	190	205	200	40	322	35	280	250	6×M20×30	158
22	450000	330	500	158	340×8×30×41×8m	200	215	210	40	342	35	290	265	6×M20×30	158
23	513000	350	550	175	360×8×30×44×8m	200	215	230	40	362	35	290	275	6×M20×30	175
24	592000	360	590	175	380×8×30×46×8m	220	235	245	40	382	35	310	290	6×M20×30	175
25	684000	380	590	182	400×8×30×48×8m	230	245	260	40	402	35	320	310	6×M24×30	182
26	763000	400	650	182	420×8×30×51×8m	240	255	280	40	422	35	330	330	6×M24×30	182
27	852000	430	690	196.5	440×8×30×54×8m	250	265	310	40	442	35	340	370	6×M24×30	196.5
28	950000	450	750	196.5	450×8×30×55×8m	260	275	330	45	452	40	360	380	6×M24×36	196.5
29	1060000	460	750	209	460×8×30×56×8m	270	285	340	45	462	40	370	390	6×M24×36	209
30	1200000	480	790	209	480×8×30×58×8m	285	300	360	45	482	40	385	410	6×M24×36	209
31	1330000	500	790	232											
32	1500000	510	850	232											
33	1690000	530	900	251											
34	1920000	570	950	251											

附件
Add-on Piece

1. 齿轮箱机座（附件代号-96） Gear units type (accessory code-96):

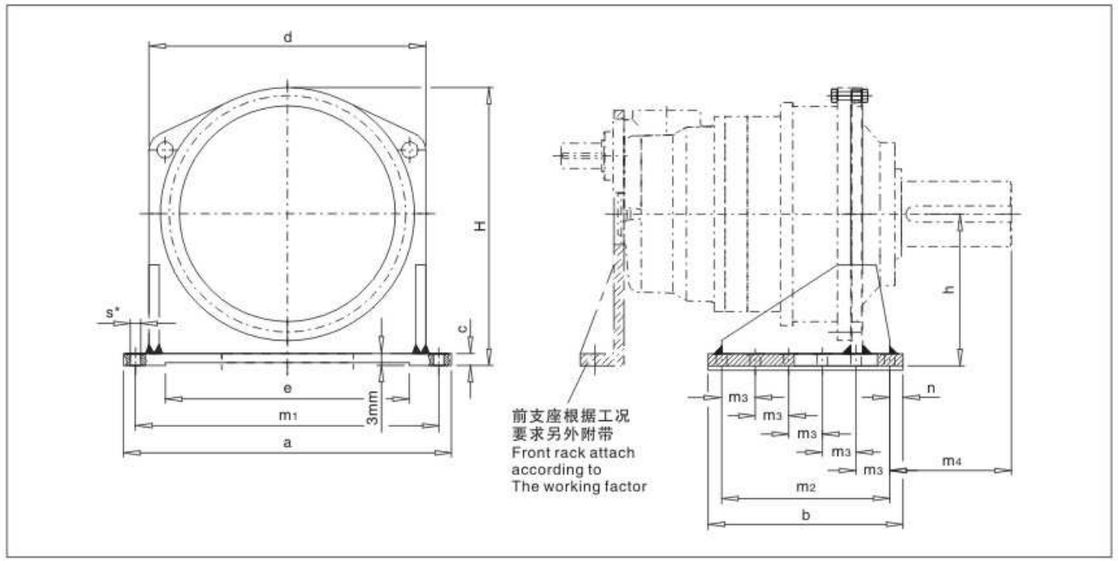

尺寸 Size	a	b	c	d	e	h	H	m_1	m_2	m_3	m_4	n	螺栓孔 Bolt hole s*	螺栓孔 Bolt hole 数量 Size	重量 Weight (kg)
9	580	330	20	450	380	260	480	520	260	130	240	35	26	2×3	56
10	630	360	25	500	430	280	525	570	290	145	240	35	26	2×3	82
11	680	400	30	550	480	315	585	620	330	110	274	35	26	2×4	122
12	760	450	30	630	560	360	670	700	380	95	292	35	26	2×5	157
13	820	490	35	680	610	390	720	750	420	105	334	35	26	2×5	213
14	920	560	35	760	680	430	800	840	480	120	380	40	33	2×5	270
16	980	580	40	820	700	470	865	900	500	125	374	40	33	2×5	350
17	1130	670	45	940	810	540	998	1040	580	145	405	45	39	2×5	520
18	1180	720	45	980	830	560	1035	1080	620	155	385	50	39	2×5	580
19	1260	760	50	1050	880	590	1090	1160	640	160	450	60	45	2×5	720
20	1260	760	50	1050	880	590	1090	1160	640	160	500	60	45	2×5	720
21	1440	840	55	1170	1020	660	1228	1320	700	175	513	70	52	2×5	940
22	1440	840	55	1170	1020	660	1228	1320	700	175	513	70	52	2×5	940
23	1540	910	60	1270	1100	730	1345	1420	750	150	567	80	52	2×6	1275
24	1540	910	60	1270	1100	730	1345	1420	750	150	607	80	52	2×6	1275
25	1700	1000	65	1400	1240	795	1465	1550	860	215	574	70	62	2×5	1670
26	1700	1000	65	1400	1240	795	1465	1550	860	215	634	70	62	2×5	1670
27	1850	1100	70	1550	1370	870	1610	1700	950	190	664	75	62	2×6	2170
28	1850	1100	70	1550	1370	870	1610	1700	950	190	724	75	62	2×6	2170
29	1980	1180	75	1640	1460	925	1715	1820	1000	250	731	90	70	2×5	2650
30	1980	1180	75	1640	1460	925	1715	1820	1000	250	771	90	70	2×5	2650
31	2150	1300	75	1750	1570	1000	1845	1950	1100	220	773	100	70	2×6	3100
32	2150	1300	75	1750	1570	1000	1845	1950	1100	220	833	100	70	2×6	3100
33	2230	1350	85	1850	1630	1050	1940	2050	1150	230	883	100	78	2×6	3850
34	2230	1350	85	1850	1630	1050	1940	2050	1150	230	933	100	78	2×6	3850

附件
Add-on Piece

2. 齿轮箱机座（附件代号-96） Gear units type (accessory code-96):

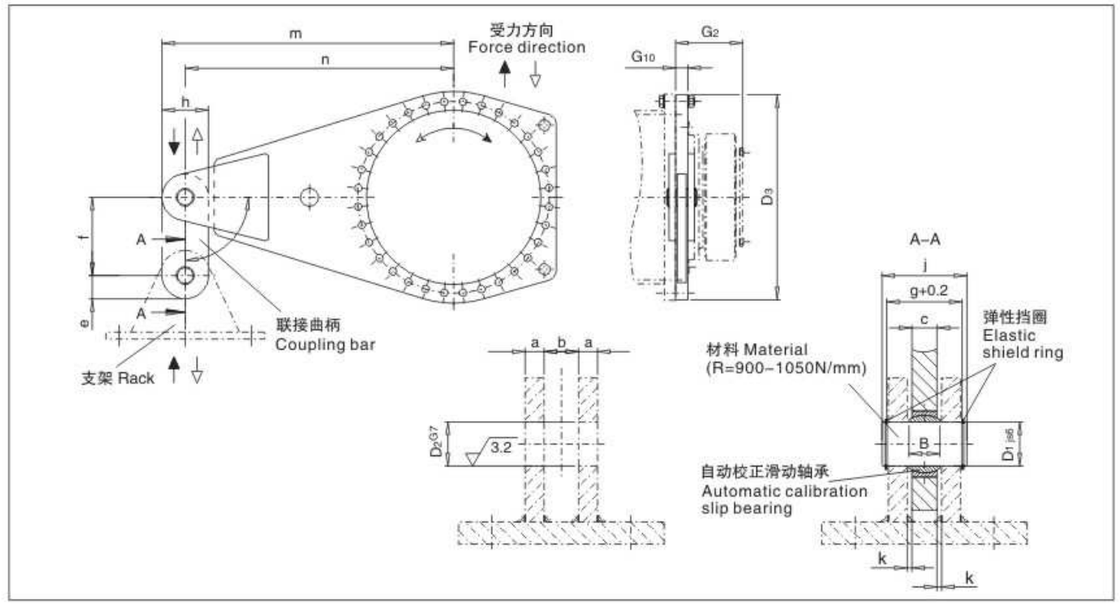

尺寸 Size	T2N (N·M)	D_1	D_2	D_3	G_2	G_{10}	a min.	b	B*	c	e	f	0 +0.2	h	j	k	m	n	滚动轴承 Rolling bearing	重量 Weight (kg)
9	22000	30		440	165	25	15	25	22	18	50	140	59.5	100	70	3.5	605	555	30	38
10	31000	35		485	174	30	15	30	25	20	52.5	140	64.5	105	75	5	667.5	615	35	51
11	42000	40		540	204	30	18	30	28	22	65	160	70.5	130	85	4	750	685	40	82
12	60000	40		620	224	30	18	30	28	22	65	160	70.5	130	85	4	850	785	40	85
13	83000	45		665	241	35	20	35	32	25	72.5	180	79.5	145	95	5	912.5	840	45	113
14	117000	50		740	278	40	20	40	35	30	72.5	200	85	145	100	5	1012.5	940	50	145
16	160000	60		790	285	50	25	50	44	35	77.5	240	105	155	120	7.5	1077.5	1000	60	206
17	202000	60		915	294	50	25	50	44	35	85	240	105	170	120	7.5	1250	1165	60	274
18	244000	70		955	303	55	30	55	49	40	105	280	120	210	135	7.5	1315	1210	70	365
19	295000	80		1005	327.5	60	30	60	55	45	105	320	125	210	145	7.5	1405	1300	80	423
20	354000	80		1005	327.5	60	30	60	55	45	105	320	125	210	145	7.5	1405	1300	80	423
21	392000	80		1140	354	60	30	60	55	45	113	320	125	225	145	7.5	1562.5	1450	80	530
22	450000	80		1140	354	60	30	60	55	45	113	320	125	225	145	7.5	1562.5	1450	80	530
23	513000	90		1235	380	65	30	65	60	50	125	360	130	250	150	7.5	1700	1575	90	665
24	592000	90		1235	380	65	30	65	60	50	125	360	130	250	150	7.5	1700	1575	90	665
25	684000	100		1350	407	75	35	75	70	55	138	400	150	275	170	10	1857.5	1720	100	940
26	763000	100		1350	407	75	35	75	70	55	138	400	150	275	170	10	1857.5	1720	100	940
27	852000	110		1490	453	75	35	75	70	55	150	440	150	300	175	10	2050	1900	110	1120
28	950000	110		1490	453	75	35	75	70	55	150	440	150	300	175	10	2050	1900	110	1120
29	1060000	110		1600	483	75	35	75	70	55	158	440	150	315	175	10	2192.5	2035	110	1260
30	1200000	110		1600	483	75	35	75	70	55	158	400	150	315	170	10	2192.5	2035	110	1260
31-34	按客户要求供货 According to customer requirements supply commodity																			

*) B=22-35，公差为-0.12； B=44-55，公差为-0.15； B=60-70，公差为-0.20
B=22-35, Reference -0.12; B=44-55, Reference -0.15; B=60-70, Reference -0.20

附件
Add-on Piece

3. 带橡胶衬套的双向扭力臂（附件代号-76）Double-sides torque arm with rubber bushing. (accessory code-76):

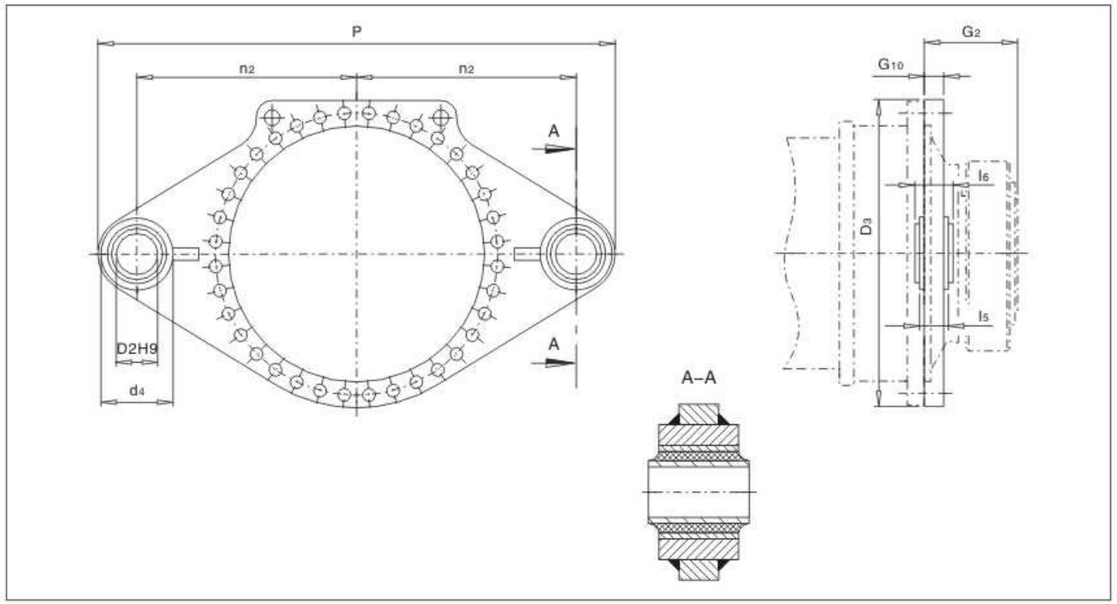

尺寸 Size	T2N (N・M)	D_{2*}	D_3	d_4	G_3	G_{10}	l_5	l_6	n_5	P	衬套 Bush	重量 Weight (kg)
9	22000	50	440	115	165	30	100	110	500	1140	0118095	58
10	31000	50	485	115	174	30	100	110	550	1240	0118095	72
11	42000	100	540	180	204	30	110	120	575	1355	0118772	95
12	60000	100	620	180	224	35	110	120	625	1455	0118772	120
13	83000	110	665	210	241	35	170	180	600	1435	0118802	145
14	117000	110	740	210	278	40	170	180	650	1535	0118802	170
16	160000	124	790	240	285	40	220	230	700	1670	0118805	230
17	202000	124	915	240	288	40	220	230	750	1770	0118805	300
18	244000	124	955	240	303	50	220	230	900	2072	0118805	400

* 销轴pin: ϕh8

附件
Add-on Piece

4. 扭转轴支架（附件代号-77） Rotation rack (accessory code-77):

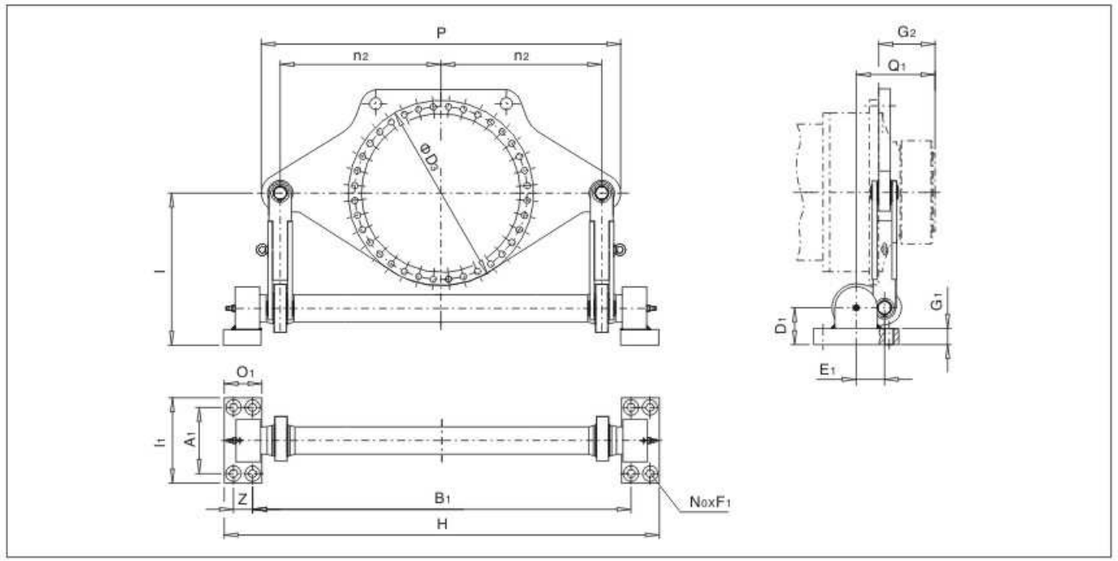

尺寸 Size	T2N (N・M)	A_1	B_1	D_3	D_1	E_1	F_1	G_1	G_2	H	l	l_1	n_2	N_0	O_1	P	Q_1	Z	重量 Weight (kg)
9	22000	250	1414	610	120	105	33	48.5	165	1619	560	330	550	8	140	1230	247.5	65	300
10	31000	250	1414	610	120	105	33	48.5	174	1619	560	330	550	8	140	1230	256.5	65	300
11	42000	250	1414	610	120	105	33	48.5	204	1619	560	330	550	8	140	1230	286.5	65	300
12	60000	250	1414	610	120	105	33	48.5	224	1619	560	330	550	8	140	1230	306.5	65	300
13	83000	280	1604	775	155	145	39	68.5	241	1837	620	380	650	8	158	1450	358.5	75	600
14	117000	280	1604	775	155	145	39	68.5	278	1837	620	380	650	8	158	1450	395.5	75	600
16	160000	280	1604	775	155	145	39	68.5	285	1837	620	380	650	8	158	1450	402.5	75	600
17	202000	315	1777	955	170	165	39	73.5	294	2041	700	400	750	8	180	1680	431.5	84	900
18	244000	315	1777	955	170	165	39	73.5	303	2041	700	400	750	8	180	1680	440.5	84	900
19	295000	350	2000	985	195	175	45	83.5	328	2300	860	450	850	8	200	1900	470.5	100	1400
20	354000	350	2000	985	195	175	45	83.5	328	2300	860	450	850	8	200	1900	470.5	100	1400
21	392000	400	2254	1120	210	190	45	88.5	354	2591	900	530	950	8	225	2110	506.5	113	1700
22	450000	400	2254	1120	210	190	45	88.5	354	2591	900	530	950	8	225	2110	506.5	113	1700
23	513000	450	2496	1215	235	220	45	98.5	380	2871	1060	590	1063	8	250	2385	562.5	125	2150
24	592000	450	2496	1215	235	220	45	98.5	380	2871	1060	590	1063	8	250	2385	562.5	125	2150
25	684000	500	2816	1350	275	245	52	118.5	407	3236	1200	650	1150	8	280	2600	614.5	140	2700
26	763000	500	2816	1350	275	245	52	118.5	407	3236	1200	650	1150	8	280	2600	614.5	140	2700
27	852000	530	2887	1490	300	255	52	128.5	453	3327	1250	700	1250	8	290	2820	670.5	150	3400
28	950000	530	2887	1490	300	255	52	128.5	453	3327	1250	700	1250	8	290	2820	670.5	150	3400
29	1060000	560	3200	1565	300	280	62	128.5	483	3673	1350	750	1360	8	315	3080	718	158	4350
30	1200000	560	3200	1565	300	280	62	128.5	483	3673	1350	750	1360	8	315	3080	718	158	4350
31	1330000	590	3408	1695	340	300	70	148.5	538	3906	1400	790	1450	8	330	3260	788	168	5500
32	1500000	590	3408	1695	340	300	70	148.5	538	3906	1400	790	1450	8	330	3260	788	168	5500
33	1680000	620	3588	1785	375	300	70	158.5	573	4116	1500	840	1550	8	350	3520	840.5	178	7000
34	1920000	620	3588	1785	375	300	70	158.5	573	4116	1500	840	1550	8	350	3520	840.5	178	7000

附件
Add-on Piece

5. 电机安装支架 Motor assembly rack

电机安装支架 (附件代号-71)
Motor assembly rack (accessory code-71)

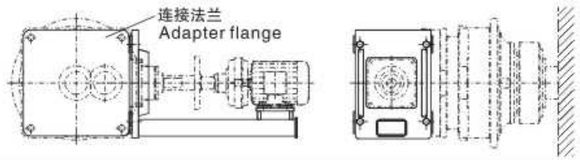

电机安装支架 (附件代号-71)
Motor assembly rack (accessory code-71)

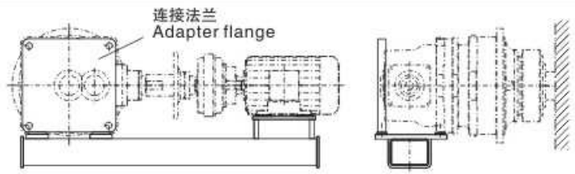

卧式电机安装支架 (附件代号-72)
Horizontal motor assembly rack (accessory code-72)

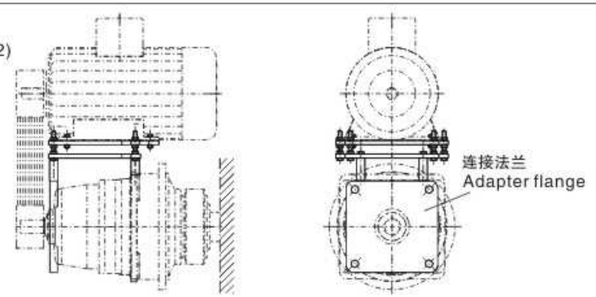

6. 法兰联接及底座安装时螺母的预紧扭矩 Flange connecting and base assembly needed bolt torque available

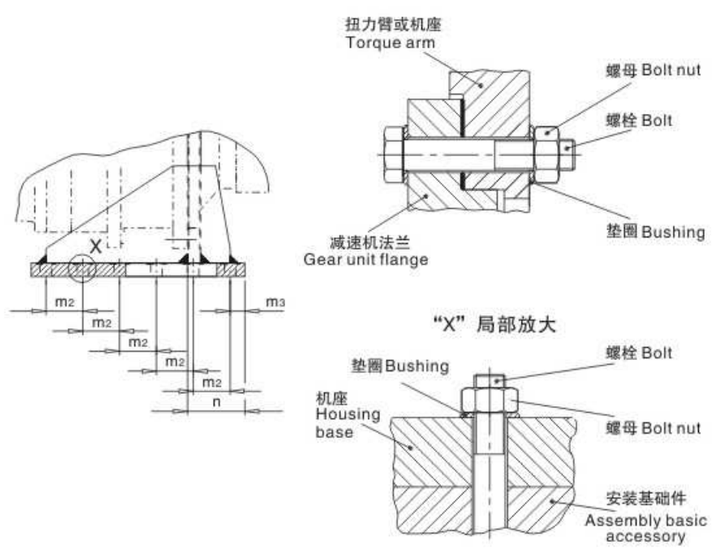

尺寸 Size	螺栓 Bolt (10.9)	预紧扭矩 Tightening torque (N·M)	螺栓 Bolt (8.8)	预紧扭矩 Tightening torque (N·M)
9	M16	295	M24	710
10	M16	295	M24	710
11	M20	580	M24	710
12	M24	1000	M24	710
13	M24	1000	M24	710
14	M24	1000	M30	1450
16	M24	1000	M30	1450
17	M30	2000	M36	2530
18	M30	2000	M36	2530
19/20	M30	2000	M42	4070
21/22	M36	3560	M48	6140
23/24	M36	3560	M48	6140
25/26	M42	5720	M56	9840
27/28	M48	8640	M56	9840
29/30	M48	8640	M64	14300
31/32	M56	13850	M64	14300
33/34	M56	13850	M64	14300

带电机法兰输入
With Motor Flange Input

1. P2S. 带电机、输入法兰及联轴器尺寸 P3S. motor input flange and coupling size:

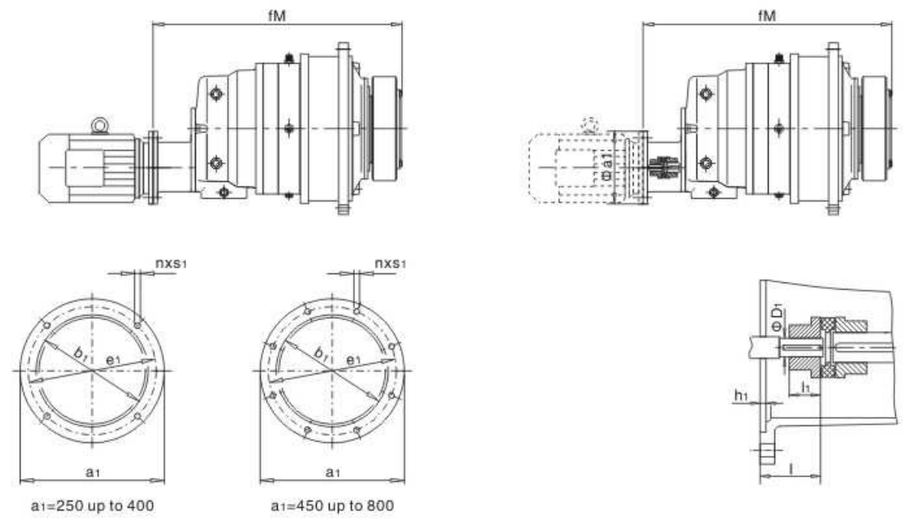

P2S.	电机 Motor (Y)*	法兰 Flange (F)**	a_1	$b_1(h_7)$	D_1	e_1	f_M	h_1	l_1	l	n	s_1
9	160		350	250	42	300	832	6	75	110	4	M16
	180		350	250	48	300	832	6	75	110	4	M16
10	160		350	250	42	300	861	6	75	110	4	M16
	180		350	250	48	300	861	6	75	110	4	M16
11	160		350	250	42	300	1010	6	75	110	4	M16
	180		350	250	48	300	1010	6	75	110	4	M16
	200		400	300	55	350	1010	7	75	110	4	M16
12	160		350	250	42	300	1044	6	75	110	4	M16
	180		350	250	48	300	1044	6	75	110	4	M16
	200		400	300	55	350	1044	7	75	110	4	M16
13	225		450	350	60	400	1247	7	90	140	8	M16
	250		550	450	65	500	1247	8	90	140	8	M16
14	225		450	350	60	400	1307	7	90	140	8	M16
	250		550	450	65	500	1307	8	90	140	8	M16
16	250		550	450	65	500	1452	7	100	140	8	M16
	280		550	450	75	500	1452	8	100	140	8	M16
17	250		550	450	65	500	1487	7	100	140	8	M16
	280		550	450	75	500	1487	8	100	140	8	M16
18	315		660	550	80	600	1680	11	110	140	8	M20
19/20	315		660	550	80	600	1728	11	110	140	8	M20

注：（1）："*" 所选直联电机机座号所对应的功率应满足传动能力表；
"**" 表格中所示的法兰为标准型号的法兰，如有异同请另咨询。
（2）侧面扭力臂组合，请咨询。

(1)* Power to match transmission force table for direct-connect motor;
** Table flange is standard flange.
(2) Side torque arm matched units, please inquiry.

带电机法兰输入
With Motor Flange Input

2. P3N. 带电机法兰及联轴器尺寸 P3N. motor flange and coupling size:

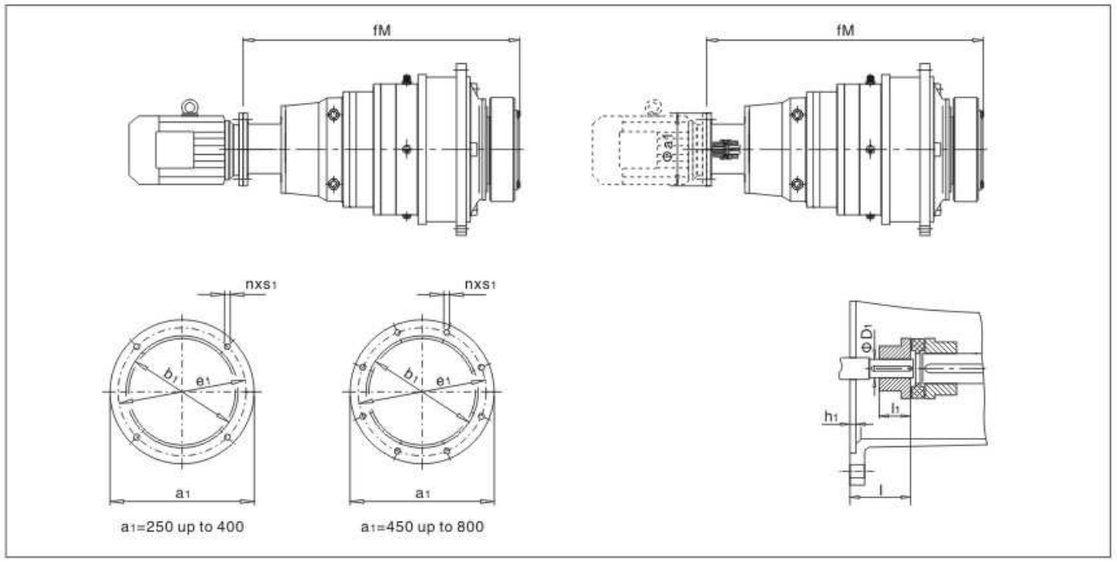

P3N.	电机 Motor (Y)*	法兰 Flange (F)**	a1	b1(h7)	D1	e1	fM	h1	l1	l	n	s1
9		132	300	230	38	265	912	5	56	80	4	M12
		160	350	250	42	300	960	6	80	110	4	M16
		180	350	250	48	300	960	6	80	110	4	M16
10		132	300	230	38	265	941	5	56	80	4	M12
		160	350	250	42	300	989	6	80	110	4	M16
		180	350	250	48	300	989	6	80	110	4	M16
11		132	300	230	38	265	1002	5	56	80	4	M12
		160	350	250	42	300	1050	6	80	110	4	M16
		180	350	250	48	300	1050	6	80	110	4	M16
12		132	300	230	38	265	1036	5	56	80	4	M12
		160	350	250	42	300	1084	6	80	110	4	M16
		180	350	250	48	300	1084	6	80	110	4	M16
13		160	350	250	42	300	1159	6	80	110	4	M16
		180	350	250	48	300	1159	6	80	110	4	M16
		200	400	300	55	350	1159	7	80	110	4	M16
14		160	350	250	42	300	1219	6	80	110	4	M16
		180	350	250	48	300	1219	6	80	110	4	M16
		200	400	300	55	350	1219	7	80	110	4	M16
16		200	400	300	55	350	1400	7	90	110	4	M16
		225	450	350	60	400	1430	7	90	140	8	M16
17		200	400	300	55	350	1435	7	90	110	4	M16
		225	450	350	60	400	1465	7	90	140	8	M16
18		250	550	450	65	500	1636.5	7	100	140	8	M16
		280	550	450	75	500	1636.5	8	100	140	8	M16
19/20		250	550	450	65	500	1685	7	100	140	8	M16
		280	550	450	75	500	1685	8	100	140	8	M16

注：（1）："*"所选直联电机机座号所对应的功率应满足传动能力表；
"**"表格中所示的法兰为标准型号的法兰，如有异同请另咨询。
（2）侧面扭力臂组合，请咨询。

(1)* Power to match transmission force table for direct-connect motor;
** Table flange is standard flange.
(2) Side torque arm matched units, please inquiry.

带电机法兰输入
With Motor Flange Input

3. P3S. 带电机法兰及联轴器尺寸 P3S. motor flange and coupling size:

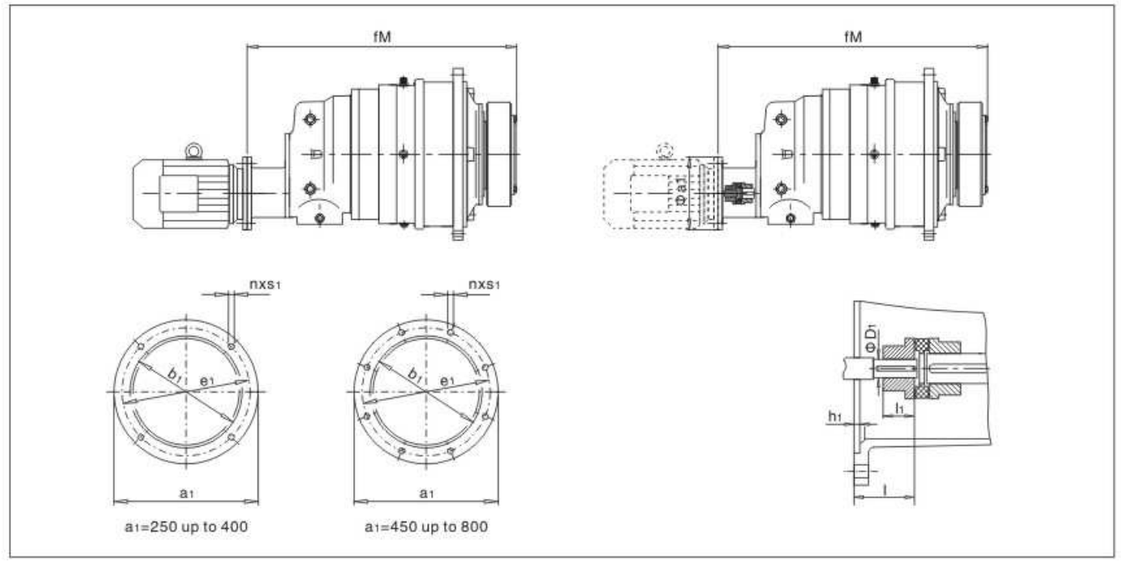

P3S.	电机 Motor (Y)*	法兰 Flange (F)**	a1	b1(h7)	D1	e1	fM	h1	l1	l	n	s1
9		100	250	180	28	215	865	5	45	60	4	M12
		112	250	180	28	215	865	5	45	60	4	M12
		132	300	230	38	265	896	5	70	80	4	M12
		160	350	250	42	300	931	6	75	110	4	M16
10		100	250	180	28	215	894	5	45	60	4	M12
		112	250	180	28	215	894	5	45	60	4	M12
		132	300	230	38	265	925	5	70	80	4	M12
		160	350	250	42	300	957	6	75	110	4	M16
11		112	250	180	28	215	955	5	45	60	4	M12
		132	300	230	38	265	986	5	70	80	4	M12
		160	350	250	42	300	1018	6	75	110	4	M16
		180	350	250	48	300	1018	6	75	110	4	M16
12		112	250	180	28	215	989	5	45	60	4	M12
		132	300	230	38	265	1020	5	70	80	4	M12
		160	350	250	42	300	1052	6	75	110	4	M16
		180	350	250	48	300	1052	6	75	110	4	M16
13		132	300	230	38	265	1095	5	70	80	4	M12
		160	350	250	42	300	1127	6	75	110	4	M16
		180	350	250	48	300	1127	6	75	110	4	M16
14		132	300	230	38	265	1155	5	70	80	4	M12
		160	350	250	42	300	1187	6	75	110	4	M16
		180	350	250	48	300	1187	6	75	110	4	M16
16		160	350	250	42	300	1365	6	75	110	4	M16
		180	350	250	48	300	1365	6	75	110	4	M16
		200	400	300	55	350	1365	7	75	110	4	M16
17		160	350	250	42	300	1390	6	75	110	4	M16
		180	350	250	48	300	1390	6	75	110	4	M16
		200	400	300	55	350	1400	7	75	110	4	M16
18		180	350	250	48	300	1558.5	6	90	110	4	M16
		200	400	300	55	350	1570.5	6	90	110	4	M16
		225	450	350	60	400	1608.5	7	90	110	8	M16
		250	550	450	65	500	1608.5	7	90	110	8	M16
19/20		180	350	250	48	300	1606	6	90	110	4	M16
		200	400	300	55	350	1618	6	90	110	4	M16
		225	450	350	60	400	1656	7	90	110	8	M16
		250	550	450	65	500	1656	7	90	110	8	M16

注：（1）："*"所选直联电机机座号所对应的功率应满足传动能力表；
"**"表格中所示的法兰为标准型号的法兰，如有异同请另咨询。
（2）侧面扭力臂组合，请咨询。

(1)* Power to match transmission force table for direct-connect motor;
** Table flange is standard flange.
(2) Side torque arm matched units, please inquiry.

带电机法兰输入
With Motor Flange Input

4. P2K. 带电机法兰及联轴器尺寸 P2K. motor flange and coupling size:

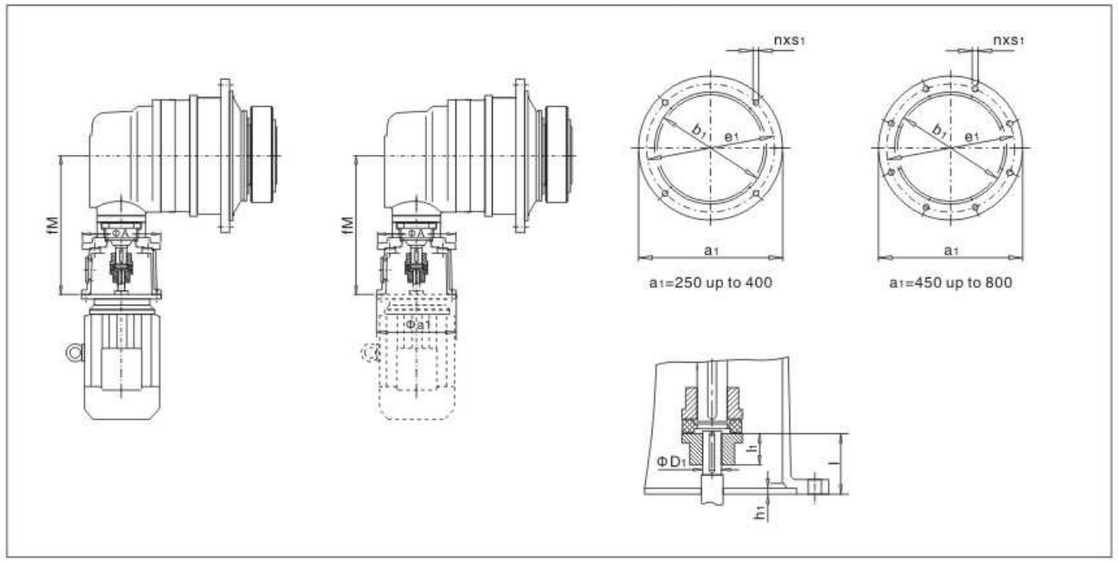

P2K.	电机 Motor (Y)*	法兰 Flange (F)**	a1	A	b1	D1	e1	fM	h1	l	l1	n	s1
9/10	132		300	250	230	38	265	486	5	80	70	4	M12
	160		350	250	250	42	300	528	6	110	75	4	M16
11/12	160		350	300	250	42	300	593	6	110	75	4	M16
	180		350	350	250	48	300	593	6	110	75	4	M16
	200		400	350	300	55	350	593	7	110	75	4	M16
13/14	160		350	440	250	42	300	663	6	110	75	4	M16
	180		350	440	250	48	300	663	6	110	75	4	M16
	200		400	440	300	55	350	663	7	110	75	4	M16
	225		450	440	350	60	400	695	7	140	80	8	M16
	250		550	440	450	65	500	707	8	140	85	8	M16
16/17	200		400	440	300	55	350	770	7	110	80	4	M16
	225		425	440	350	60	400	800	7	140	80	8	M16
	250		550	440	450	65	500	812	8	140	85	8	M16
	280		550	440	450	75	500	812	8	140	85	8	M16
18/19/20	225		450	440	350	60	400	932	7	140	85	8	M16
	250		550	440	450	65	500	932	8	140	85	8	M16
	280		550	440	450	75	500	932	8	140	85	8	M16
	315*		600	440	550	80	600	967	11	170	100	8	M20

注：（1）："*"所选直联电机机座号所对应的功率应满足传动能力表；
"**"表格中所示的法兰为标准型号的法兰，如有异同请另咨询。
（2）侧面扭力臂组合，请咨询。

(1)* Power to match transmission force table for direct-connect motor;
** Table flange is standard flange.
(2) Side torque arm matched units, please inquiry.

带电机法兰输入
With Motor Flange Input

5. P2L. 带电机法兰及联轴器尺寸 P2L. motor flange and coupling size:

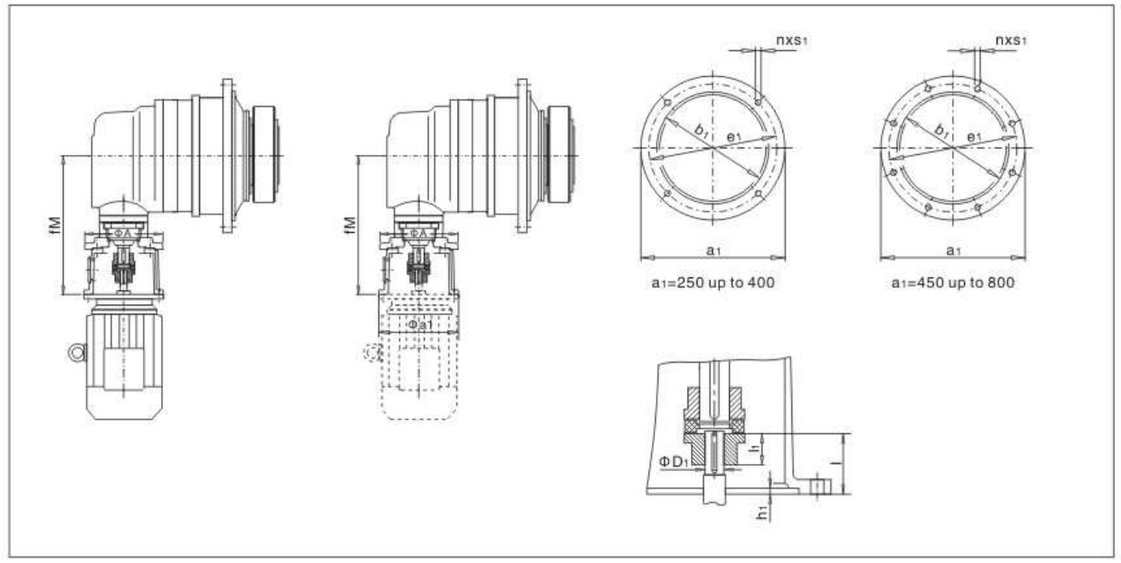

P2K.	电机 Motor (Y)*	法兰 Flange (F)**	a1	A	b1	D1	e1	fM	h1	l	l1	n	s1
9/10	160		350	440	250	42	300	543	6	110	75	4	M16
	180		350	440	250	48	300	543	6	110	75	4	M16
	200		400	440	300	55	350	543	7	110	75	4	M16
	225		450	440	350	60	400	575	7	140	80	8	M16
11/12	200		400	440	300	55	350	600	7	110	75	4	M16
	225		450	440	350	60	400	630	7	140	80	8	M16
	250		550	440	450	65	500	642	8	140	85	8	M16
13/14	225		450	440	350	60	400	732	7	140	85	8	M16
	250		550	440	450	65	500	732	8	140	85	8	M16
	280		550	440	450	75	500	732	8	140	85	8	M16
16/17	280		550	600	450	75	500	842	8	140	100	8	M16
	315*		660	650	550	80	600	872	11	170	100	8	M20
	315MC		660	650	550	80	600	872	11	170	100	8	M20
	315MD		660	650	550	80	600	872	11	170	100	8	M20
	315LB		660	650	550	80	600	987	11	170	100	8	M20
18/19/20	315*		660	650	550	80	600	987	11	170	100	8	M20
	315MC		660	650	550	80	600	987	11	170	100	8	M20
	315MD		660	650	550	80	600	987	11	170	100	8	M20
	315LB		660	650	550	80	600	1122	11	170	100	8	M20
	315MC		660	650	550	80	600	1122	11	170	125	8	M20
	315MD		660	650	550	80	600	1122	11	170	125	8	M20
21/22 23/24	315LB		660	650	550	80	600	1122	11	170	125	8	M20
	315MB		800	650	680	95	740	1122	11	170	125	8	M20
	315LB		800	650	680	95	740	1122	11	170	125	8	M20

注：（1）："*"所选直联电机机座号所对应的功率应满足传动能力表；
"**"表格中所示的法兰为标准型号的法兰，如有异同请另咨询。
（2）侧面扭力臂组合，请咨询。

(1)* Power to match transmission force table for direct-connect motor;
** Table flange is standard flange.
(2) Side torque arm matched units, please inquiry.

带电机法兰输入
With Motor Flange Input

6. P3K. 带电机法兰及联轴器尺寸 P3K. motor flange and coupling size:

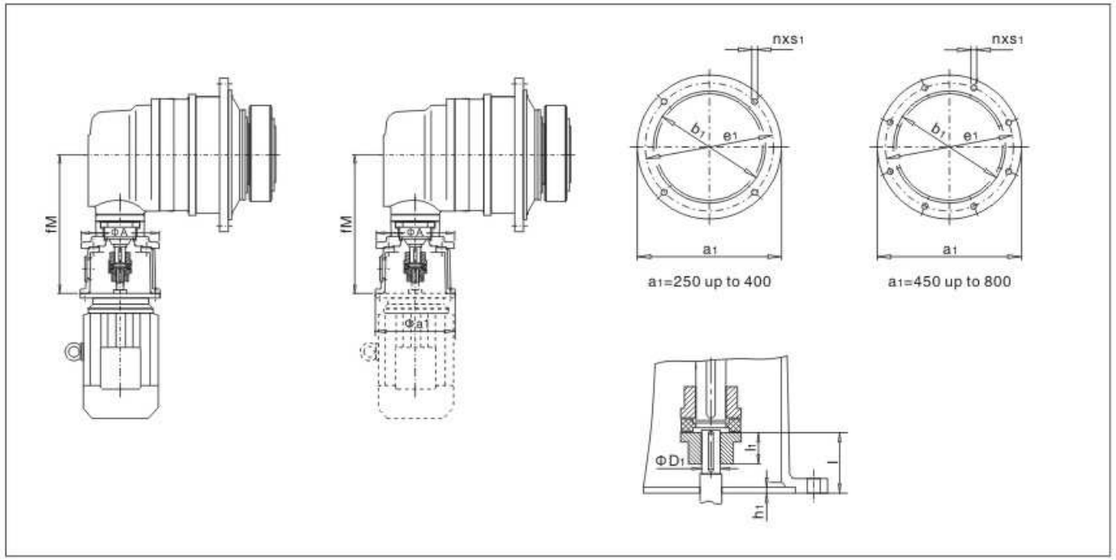

P2K.	电机 Motor (Y)*	法兰 Flange (F)**	a1	A	b1	D1	e1	fM	h1	l	l1	n	s1
9/10/11 12/13/14	132		300	250	230	38	265	486	5	80	70	4	M12
	160		350	250	250	42	300	528	6	110	75	4	M16
	180		350	250	250	48	300	528	6	110	75	4	M16
16/17	160		350	350	250	42	300	593	6	110	75	4	M16
	180		350	350	250	40	300	593	6	110	75	4	M16
	200		400	350	300	55	350	593	7	110	75	4	M16
18/19/20 21/22	160		350	440	250	42	300	663	6	110	75	4	M16
	180		350	440	250	48	300	663	6	110	75	4	M16
	200		400	440	300	35	350	663	7	110	75	4	M16
	225		450	440	350	60	400	695	7	140	80	8	M16
	250		550	440	450	65	500	707	8	140	85	8	M16
23/24 25/26	200		400	440	300	55	350	770	6	110	80	4	M16
	225		450	440	350	60	400	800	7	140	80	8	M16
	250		550	440	450	62	500	812	7	140	85	8	M16
	280		550	440	450	75	500	812	8	140	85	8	M16
27/28 29/30	225		450	440	350	60	400	932	7	140	85	8	M16
	250		550	440	450	65	500	932	7	140	85	8	M16
	280		550	440	450	75	500	932	8	140	85	8	M16
	315*		600	440	550	80	600	967	11	170	100	8	M20

注：（1）："*" 所选直联电机机座号所对应的功率应满足传动能力表；
"**" 表格中所示的法兰为标准型号的法兰，如有异同请另咨询。
（2）侧面扭力臂组合，请咨询。

(1)* Power to match transmission force table for direct-connect motor;
** Table flange is standard flange.
(2) Side torque arm matched units, please inquiry.

附件代号
Accessory Cod

代号Code	附件 Add-on piece		附图 Representation
99	不带附件 Without accessory		
96	带附件 With base	7.12.1	
71	电机机架（电机、连轴号） Motor rack (motor, concentric shaft)	7.12.5	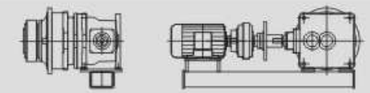
72	电机机架 Motor rack		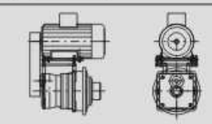
73	电机移动机座 （电机、联轴器、齿轮箱） Motor mobile rack(motor, coupling, gear units)		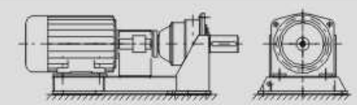
74	钟型罩式法兰（输出） Bell liner flange		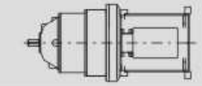
75	扭力臂（单向） Torque arm(single direction)	7.12.2	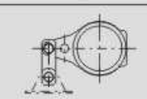
76	扭力臂（双向） Torque arm(double direction)	7.12.3	
77	扭转轴支架 Torsion shaft rack	7.12.4	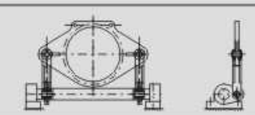
80	支架1 Rack 1		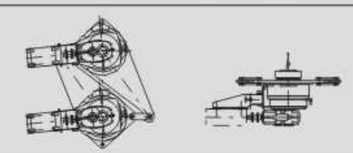
81	支架2 Rack 2		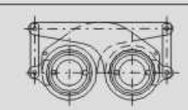
	特殊设计按客户要求 Special design according to customer requirements		

* 非刚性联接 Non rigid connection

垂直安装时润滑油补偿油箱
Vertical Assembly Fabrication Compensating Oil Case

安装方位为V1, V3, V11, V31时采用润滑油补偿油箱
Assembly mode V1, V3, V11, V31 fabrication compensating oil case.

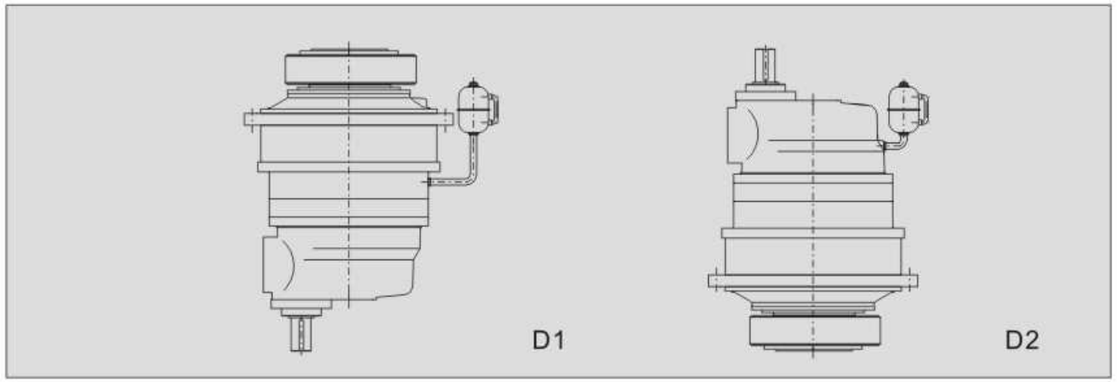

在垂直安装条件下，正常的润滑方法很难给予顶端轴承提供润滑油，为了确保润滑油的供应，齿轮箱内油量必须加高，如上图(D1,D2)所示，通过补偿油箱加高油位，补偿油箱上装有通气帽通气．油箱可被安装在齿轮 箱上，也可以安装在客户的机架上，实际尺寸和最终位置在订货时商定．

The formal fabrication ways is hard to fill the fabrication oil in the vertical assembly conditions, in order to make the supply of the fabrication oil, the oil volume in the gear units need to heighten. Just like the picture (D1, D2) shows, to enhance the oil level by compensating oil case with air vent and cap.. the oil case could be installed on the gear units as well as the customer's machine rack. The factual size and final position can be negotiated when placing an order.

水平安装时，油泵供油如下 Horizontal installation, oil pump supply oil as follow

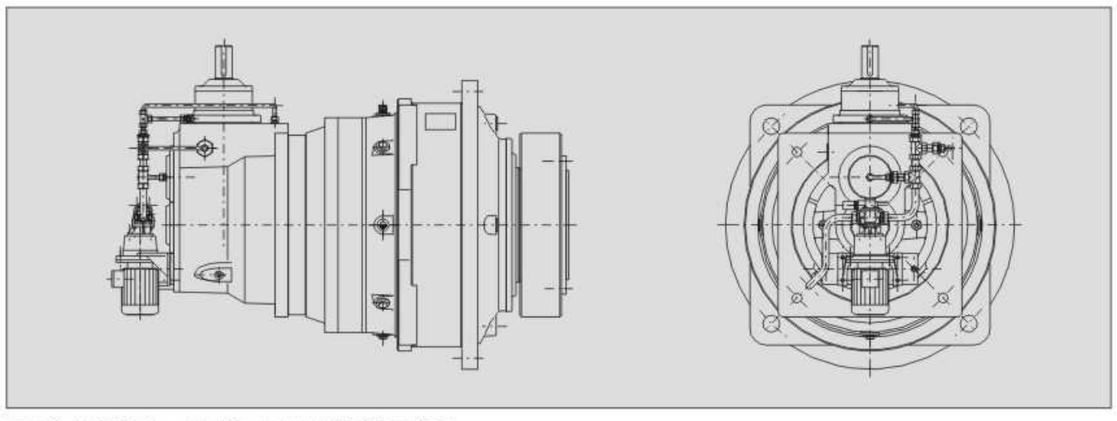

B51安装方位时，需配备电动泵强制循环润滑
[PK，PL为B51安装方位时所有规格（即9-34型），PS的20型以上所有规格（即21-34型）]
B51 assembly position, need the match the electric motor pump to force the cycle fabrication.
(PK, PL is B51 assembly position is suitable to type 9-34. above PS 20 type(21-34)

注：轴布置形式，请参阅13.17.

安装方位
Installation Position

水平安装 Horizontal type				垂直安装 Vertical type	
同轴式齿轮箱 Concentric gearbox	0		B5	V1	V3
斜齿-行星齿轮箱 Helical-planetary gearbox	1	P.S.	*) B51	V11	V31
			B52		
			B53		
			B54		
伞齿-斜齿-行星齿轮箱 Bevel-helical planetary gearbox	2	P.K.	*) B51	V11	V31
			B52		
			B53		
			B54		
伞齿-行星齿轮箱 Bevel-planetary gearbox	3	P.L.	*) B51	V11	V31
			B52		
			B53		
			B54		
扭力臂安装 Torque arm assembly	5		A51 / A52	*) 对于B51, V1, V3, V11, V31安装方位时，需延齿轮箱的润滑，请与我们联系。 *) For B51, V1, V3, V11, V31 installation orientation, boundary for gear lubrication, please contact us	
			A53 / A54		
			A55 / A56		