ZenithPura

苏州新鼎汇环保科技有限公司

SUZHOU XINDINGHUI ENVIRONMENTAL PROTECTION TECHNOLOGY CO., LTD.

地址：江苏省苏州市相城区元和街道宣公路588号元和塘科技文化研发社区1号楼5楼550室

ADD: Room 550, 5th Floor, Building 1, Yuanhetang Science and Technology Culture R&D Community, No. 588 Xuangong Road, Yuanhe Street, Xiangcheng District, Suzhou City, Jiangsu Province

TEL: +86 13913135613　E-mail：sunny@zenithpura.com　www.zenithpura.com

SOCKET TRUE UNION BALL VALVE

插口双由令球阀



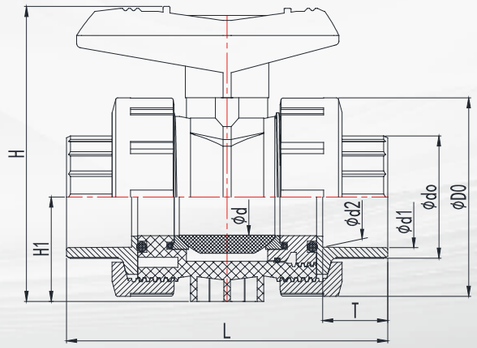

产品介绍

阀门描述
Valve Description

1. 材质：PVC -U
Material: PVC -U

2. 尺寸：DN15-100
Size: DN15-100

3. 标准：国标
Standard: DIN

4. 连接：插口
Connection: socket

5. 颜色：把手 - 红色，本体 - 深灰
Color:handle - red body - dark grey

产品特性
Product Features

1. 开关扭力小
Small switch torque

2. 简单经济
Compact and economical

3. 材料经过纳米改性，提高产品的耐压性及抗冲击性
The material is nano-modified to improve the pressure resistance and impact resistance of the product

4. 阀体加厚处理，抗压性能高
Thickened valve body for high compression resistance

5. 阀门出厂 100% 压力测试
100% pressure test before delivery

产品参数 SPECIFICATIONS

尺寸 Size Dn(De)	外形尺寸 Dimensions（MM）								
	D0	d0	d1	d2	d	T	H1	H	L
15(20)	51.50	27.40	20.30	19.95	15.50	17.00	26.30	82.80	95.50
20(25)	59.00	32.70	25.30	24.95	20.50	19.50	30.60	92.80	109.10
25(32)	70.00	41.30	32.30	31.90	26.00	23.00	39.10	109.20	122.60
32(40)	85.40	49.60	40.35	39.90	33.00	27.00	44.20	131.80	147.30
40(50)	98.90	60.20	50.35	49.90	39.00	32.00	52.20	143.20	158.80
50(63)	122.20	76.00	63.40	62.90	51.00	38.50	71.30	175.70	182.80
65(75)	158.60	89.60	75.40	74.90	64.00	44.50	82.80	231.50	234.00
80(90)	192.10	105.40	90.50	89.90	81.00	52.00	99.30	260.60	255.00
100(110)	223.60	128.40	110.60	109.90	99.00	62.00	115.20	292.10	297.00

配件明细 PARTS LIST

序号 NO.	名称 Name	数量 Quantity	材料 Material
01	手柄 Lever	1	PVC-U/PP+GF30%
02	连接杆 Shaft	1	PVC-U
03	螺帽 Nut	2	PVC-U
04	承口 Faucet	2	PVC-U
05	阀体 Body	1	PVC-U
06	球心 Ball	1	PVC-U
07	止泻圈 Ball Seat	2	TPE+PP
08	O 型圈 1 O-ring1	2	EPDM
09	O 型圈 2 O-ring2	2	EPDM
10	调节单盖 Seal Carrier	1	PVC-U
11	O 型圈 3 O-ring3	1	EPDM
12	O 型圈 4 O-ring4	2	EPDM

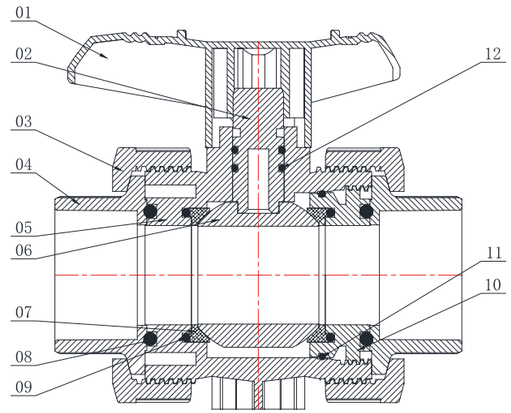



SINGLE UNION CHECK VALVE

单由令止回阀



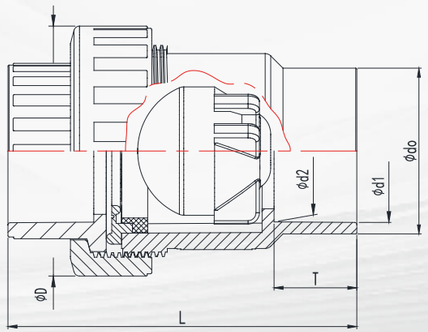

产品介绍

阀门描述
Valve Description

1. 材质：PVC-U
Material: PVC-U

2. 尺寸：DN15-100
Size: DN15-100

3. 标准：国标
Standard: DIN

4. 连接：插口
Connection: socket

5. 颜色：深灰
Color: dark gray

产品特性
Product Features

1. 实心·内球，止水效果好
Solid inner ball, good water stop effect

2. 部件可更换，简单经济
Parts can be replaced, simple and economical

3. 材料经过纳米改性，提高产品的耐压性及抗冲击性
The material is nano-modified to improve the pressure resistance and impact resistance of the product

4. 阀体加厚处理，抗压性能高
Thickened valve body for high compression resistance

5. 阀门出厂 100% 压力测试
100% pressure test before delivery

产品参数 SPECIFICATIONS

尺寸 Size De	外形尺寸 Dimensions（mm）						工作压力 Working pressure PN(kg/cm²)	最低开启压力 Minimum opening pressure PN(kg/cm²)
	D	d0	d1	d2	T	L		
15(20)	47.00	26.90	20.30	19.95	16.50	77.50	10	0.15~0.3
20(25)	53.90	32.50	25.30	24.95	19.00	94.50	10	0.15~0.3
25(32)	67.00	40.30	32.30	31.90	22.50	111.00	10	0.15~0.3
32(40)	78.50	49.40	40.35	39.90	26.50	129.00	10	0.15~0.3
40(50)	93.20	61.60	50.35	49.90	31.50	143.00	10	0.15~0.3
50(63)	110.60	73.40	63.40	62.90	36.70	154.70	10	0.15~0.3
65(75)	130.60	89.60	75.40	74.90	44.00	185.40	10	0.15~0.3
80(90)	148.40	105.50	90.50	89.90	51.50	213.70	10	0.15~0.3
100(110)	173.40	126.50	110.60	109.90	61.50	238.40	10	0.15~0.3

配件明细 PARTS LIST

序号 No.	名称 Name	数量 Quantity	材料 Material
01	承口 Faucet	1	PVC-U
02	螺帽 Nut	1	PVC-U
03	橡胶圈 Rubber Ring	1	EPDM/FPM
04	定位圈 Locating Ring	1	PVC-U
05	阀芯 Ball	1	PVC-U
06	阀体 Body	1	PVC-U

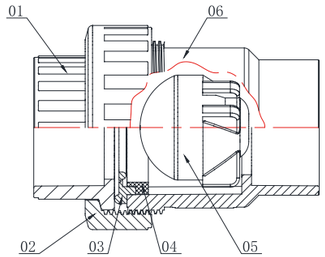



SINGLE UNION FOOT VALVE

单由令底阀



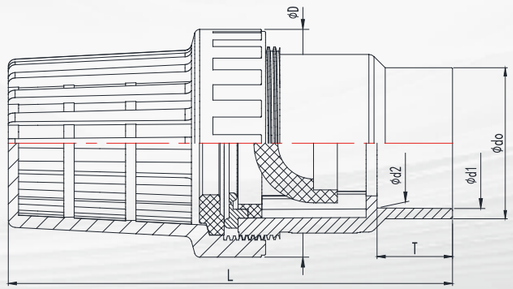

产品介绍

阀门描述
Valve Description

1. 材质：PVC-U
Material: PVC-U

2. 尺寸：DN15-50
Size: DN15-50

3. 标准：国标
Standard: DIN

4. 连接：插口
Connection: socket

5. 颜色：深灰
Color: dark gray

产品特性
Product Features

1. 实心·内球，止水效果好
Solid inner ball, good water stop effect

2. 部件可更换，简单经济
Parts can be replaced, simple and economical

3. 材料经过纳米改性，提高产品的耐压性及抗冲击性
The material is nano-modified to improve the pressure resistance and impact resistance of the product

4. 阀体加厚处理，抗压性能高
Thickened valve body for high compression resistance

5. 阀门出厂 100% 压力测试
100% pressure test before delivery

产品参数 SPECIFICATIONS

尺寸 Size DN（De）	外形尺寸 Dimensions（mm）						工作压力 Working pressure PN(kg/cm²)	最低开启压力 Minimum opening pressure PN(kg/cm²)
	D	d0	d1	d2	T	L		
15(20)	47.00	27.90	20.30	19.96	16.50	113.00	10	0.15~0.3
20(25)	53.90	32.50	25.30	24.95	19.00	132.40	10	0.15~0.3
25(32)	67.00	40.30	32.30	31.90	22.50	145.70	10	0.15~0.3
32(40)	78.50	49.30	40.35	39.90	26.50	177.40	10	0.15~0.3
40(50)	93.00	61.60	50.35	49.90	31.50	201.60	10	0.15~0.3
50(63)	110.60	74.00	63.40	62.90	36.70	215.80	10	0.15~0.3

配件明细 PARTS LIST

序号 No.	名称 Name	数量 Quantity	材料 Material
01	网罩 Mesh Enclosure	1	PVC-U
02	垫圈 Washer	1	PVC-U
03	胶圈 Ring	1	EPDM/FPM
04	定位圈 Locating Ring	1	PVC-U
05	阀芯 Ball	1	PVC-U
06	阀体 Body	2	PVC-U

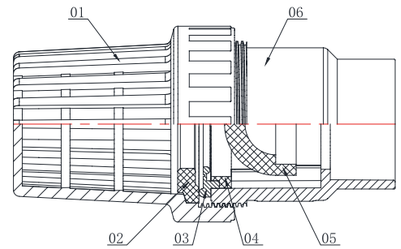



SWING FOOT VALVE

摆动式底阀



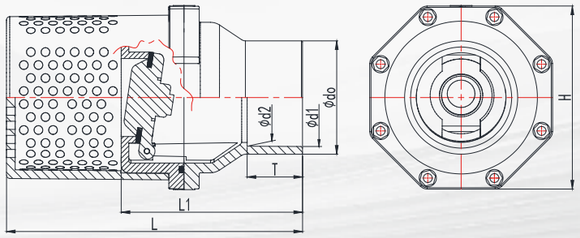

产品介绍

阀门描述
Valve Description

1. 材质：PVC-U
Material: PVC-U

2. 尺寸：DN65-150
Size: DN65-150

3. 标准：国标
Standard: DIN

4. 连接：插口
Connection: socket

5. 颜色：深灰
Color: dark gray

产品特性
Product Features

1. 部件可更换，简单经济
Parts can be replaced, simple and economical

2. 材料经过纳米改性，提高产品的耐压性及抗冲击性
The material is nano-modified to improve the pressure resistance and impact resistance of the product

3. 阀体加厚处理，抗压性能高
Thickened valve body for high compression resistance

4. 阀门出厂 100% 压力测试
100% pressure test before delivery

产品参数 SPECIFICATIONS

尺寸 Size DN（De）	外形尺寸 Dimensions（mm）							工作压力 Working pressure PN(kg/cm²)	最低开启压力 Minimum opening pressure PN(kg/cm²)
	d0	d1	d2	T	L1	L	H		
65(75)	88.20	75.40	74.90	43.70	160.00	266.00	169.00	6	0.15~0.3
80(90)	104.60	90.50	89.90	51.20	167.50	273.50	169.00	6	0.15~0.3
100(110)	125.40	110.60	109.90	61.20	218.00	379.00	206.00	6	0.15~0.3
De125(125)	145.50	125.70	124.90	68.70	215.50	386.50	206.00	6	0.15~0.3
125(140)	164.00	140.75	139.90	76.30	294.80	496.30	285.00	6	0.15~0.3
150(160)	186.00	160.80	159.90	87.00	304.50	505.80	285.00	6	0.15~0.3

配件明细 PARTS LIST

序号 No.	名称 Name	数量 Quantity	材料 Material
01	漏体 Drain Body	1	PVC-U
02	阀体 Body	1	PVC-U
03	胶圈 1 Ring1	1	EPDM/FPM
04	活板 Trap	1	PVC-U
05	固定块 Fixed Block	2	PVC-U
06	胶圈 2 Ring2	1	EPDM/FPM
07	阀盖 Cover	1	PVC-U
08	螺栓 Bolt	12	Stainless steel
09	螺母 Nut	12	Stainless steel
10	垫片 Washer	12	Stainless steel

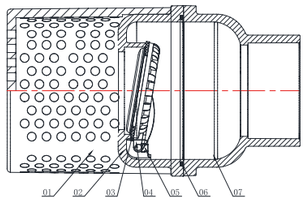

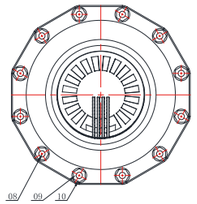



SWING CHECK VALVE

摆动式止回阀



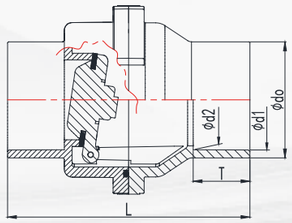

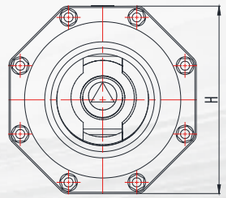

产品介绍

阀门描述
Valve Description

1. 材质：PVC-U
Material: PVC-U

2. 尺寸：DN65-150
Size: DN65-150

3. 标准：国标
Standard: DIN

4. 连接：插口
Connection: socket

5. 颜色：深灰
Color: dark gray

产品特性
Product Features

1. 部件可更换，简单经济
Parts can be replaced, simple and economical

2. 材料经过纳米改性，提高产品的耐压性及抗冲击性
The material is nano-modified to improve the pressure resistance and impact resistance of the product

3. 阀体加厚处理，抗压性能高
Thickened valve body for high compression resistance

4. 阀门出厂 100% 压力测试
100% pressure test before delivery

产品参数 SPECIFICATIONS

尺寸 Size DN（De）	外形尺寸 Dimensions（mm）						工作压力 Working pressure PN(kg/cm²)	最低开启压力 Minimum opening pressure PN(kg/cm²)
	d0	d1	d2	T	L	H		
65(75)	88.20	75.40	74.90	43.70	207.10	169.00	6	0.15~0.3
80(90)	104.60	90.50	89.90	51.20	218.70	169.00	6	0.15~0.3
100(110)	125.40	110.60	109.90	61.20	268.00	206.00	6	0.15~0.3
De125(125)	145.50	125.70	124.90	68.70	283.00	206.00	6	0.15~0.3
125(140)	164.00	140.75	139.90	76.30	369.30	285.00	6	0.15~0.3
150(160)	186.00	160.80	159.90	87.00	390.00	285.00	6	0.15~0.3

配件明细 PARTS LIST

序号 No.	名称 Name	数量 Quantity	材料 Material
01	阀体 Body	1	PVC-U
02	胶圈 1 Ring1	1	EPDM/FPM
03	活板 Trap	1	PVC-U
04	胶圈 2 Ring2	1	EPDM/FPM
05	阀盖 Cover	1	PVC-U
06	螺栓 Bolt	8	Stainless steel
07	螺母 Nut	8	Stainless steel
08	垫片 Washer	8	Stainless steel

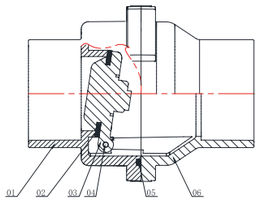

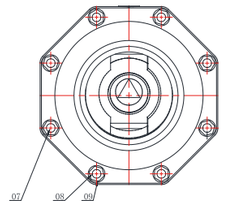



SAMPLING VALVE

取样阀



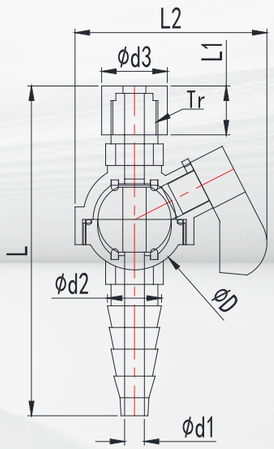

产品参数 SPECIFICATIONS

尺寸 Size (*")	外形尺寸 Dimensions（mm）							
	D	d1	d2	d3	L	L1	L2	Tr
1/4"	28.50	5.50	15.00	20.00	94.00	16.00	53.50	1/4"

配件明细 PARTS LIST

序号 No.	名称 Name	数量 Quantity	材料 Material
01	螺帽 Nut	1	PVC-U
02	阀体 Body	1	PVC-U
03	胶圈 Ring	1	EPDM/FPM
04	球心 Ball	1	PVC-U
05	胶圈 Ring	1	EPDM/FPM
06	胶圈 Ring	1	EPDM/FPM
07	阀嘴 Nozzle	1	PVC-U
08	手柄 Lever	1	PVC-U

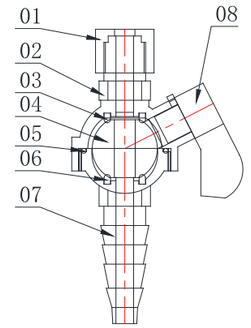



CENTRIC BUTTERFLY VALVE (MANUAL TYPE)

手动式中心蝶阀



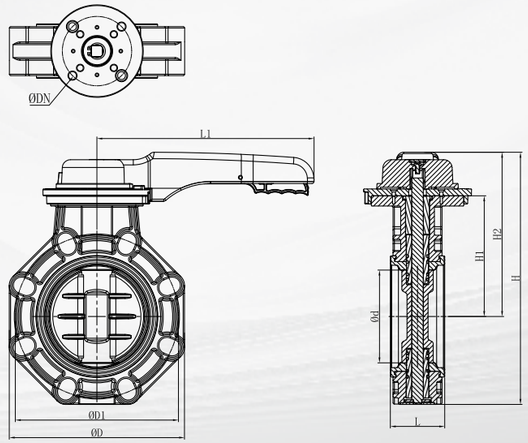

产品介绍

阀门描述
Valve Description

1. 材质：PVC-U/PVC-M
Material: PVC-U/PVC-M

2. 尺寸：DN100-400
Size: DN100-400

3. 标准：国标 美标 日标
Standard: DIN,ASTM,JIS

4. 连接：法兰
Connection: flange

5. 颜色：手柄 - 红色，本体 - 深灰
Color: lever-red, body-dark gray

产品特性
Product Features

1. 开关扭力小
Small switch torque

2. 部件可更换，简单经济
Parts can be replaced, simple and economical

3. 材料经过纳米改性，提高产品的耐压性及抗冲击性
The material is nano-modified to improve the pressure resistance and impact resistance of the product

4. 阀体加厚处理，抗压性能高
Thickened valve body for high compression resistance

5. 阀门出厂 100% 压力测试
100% pressure test before delivery

6. 本体和密封经过特殊处理，性能更好
Body and sealing parts are specially treated for better perfermance

产品参数 SPECIFICATIONS

SIZE	INCH	2"	2-1/2"	3"	4"	5"	6"	8"
	DN	50	65	80	100	125	150	200
ΦD		142.00	171.00	178.00	207.00	233.60	258.00	325.60
ΦD1	国标 DIN	125.00	145.00	160.00	180.00	210.00	240.00	295.00
	美标 ASTM	121.00	140.00	150.00	191.00	216.00	241.00	298.00
	日标 JIS	120.00	140.00	150.00	175.00	210.00	240.00	290.00
Φd		61.65	79.50	92.60	112.60	136.90	161.40	199.00
L		53.00	55.00	57.00	61.40	73.00	80.00	80.00
ΦDN		70.00	70.00	70.00	70.00	70.00	102.00	102.00
L1		241.00	241.00	241.00	241.00	241.00	320.00	320.00
H1		99.50	111.50	127.00	142.00	158.00	177.50	206.50
H2		140.50	152.50	168.00	183.00	199.00	219.50	248.50
H		211.50	238.00	257.00	286.50	315.80	348.50	411.30
n-Φe	国标 DIN	4-19	4-19	8-19	8-19	8-19	8-23	8-23
	美标 ASTM	4-19	4-19	4-19	8-19	8-19	8-23	8-23
	日标 JIS	4-19	4-19	8-19	8-19	8-19	8-23	12-23
PN	MPa	1.60	1.60	1.60	1.60	1.60	1.60	1.00

配件明细 PARTS LIST

序号 No.	名称 Name	数量 Quantity	材料 Material
01	商标盖 Brand Cap	1	PVC-U
02	盘头螺钉 Pan Head Screw	1	316L 不锈钢 Stainless Steel
03	手柄 Handle Lever	1	PVC-U
04	沉头自攻螺钉 Self-tapping Screw	4	316L 不锈钢 Stainless Steel
05	卡璜 Snap Ring	1	316L 不锈钢 Stainless Steel
06	齿轮盘 Gear Seat	1	PVC-U
07	定位套 Located Sleeve	1	PP+GF
08	导向套 Guide Sleev	2	PVC-U
09	0 型圈 O ring	8	EPDM
10	阀杆 Shaft	1	316L 不锈钢 Stainless Steel
11	阀体 Body	1	PVC-U
12	胶套 Rubber Seal	1	EPDM
13	阀板 Dics	1	PVC-U
14	垫圈 Washer	1	316L 不锈钢 Stainless Steel
15	底盖 Cover	1	PP+GF
16	销钉 Pin	1	PA6+GF
17	止动把手 Locking Handle	1	PVC-U
18	弹簧 Spring	1	PP+GF

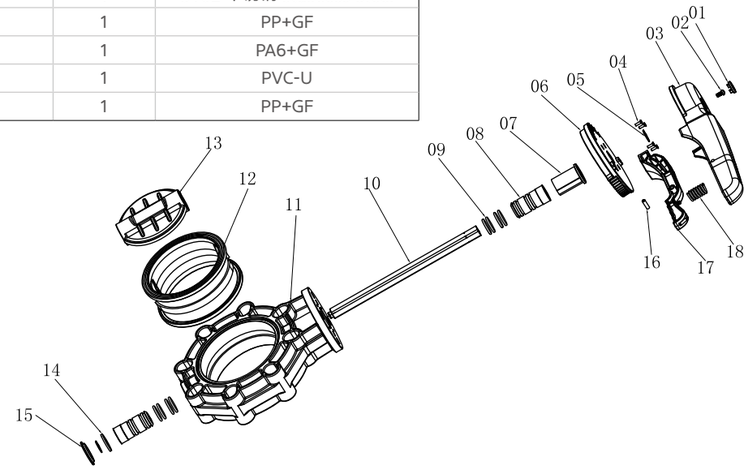

CENTRIC BUTTERFLY VALVE (GEAR TYPE)

涡轮式中心蝶阀



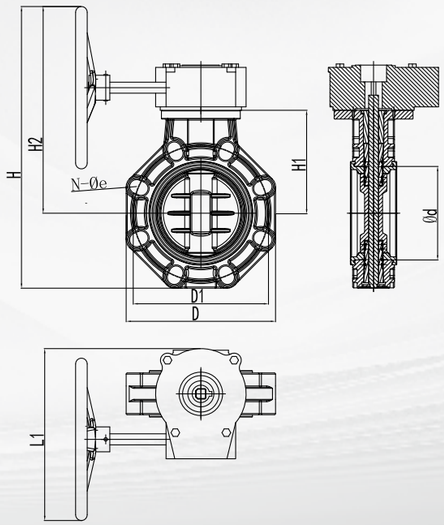

产品介绍

阀门描述
Valve Description

1. 材质：PVC-U/PVC-M
Material: PVC-U/PVC-M

2. 尺寸：DN100-400
Size: DN100-400

3. 标准：国标 美标 日标
Standard: DIN,ASTM,JIS

4. 连接：法兰
Connection: flange

5. 手柄 - 红色，本体 - 深灰
Color: lever-red, body-dark gray

产品特性
Product Features

1. 开关扭力小
Small switch torque

2. 部件可更换，简单经济
Parts can be replaced, simple and economical

3. 材料经过纳米改性，提高产品的耐压性及抗冲击性
The material is nano-modified to improve the pressure resistance and impact resistance of the product

4. 阀体加厚处理，抗压性能高
Thickened valve body for high compression resistance

5. 阀门出厂 100% 压力测试
100% pressure test before delivery

6. 本体和密封经过特殊处理，性能更好
Body and sealing parts are specially treated for better perfermance

产品参数 SPECIFICATIONS

SIZE	INCH	2"	2-1/2"	3"	4"	5"	6"	8"
	DN	50	65	80	100	125	150	200
ΦD		142.00	171.00	178.00	207.00	233.60	258.00	325.60
ΦD1	国标 DIN	125.00	145.00	160.00	180.00	210.00	240.00	295.00
	美标 ASTM	121.00	140.00	150.00	191.00	216.00	241.00	298.00
	日标 JIS	120.00	140.00	150.00	175.00	210.00	240.00	290.00
Φd		61.65	79.50	92.60	112.60	136.90	161.40	199.00
L		296.50	296.50	296.50	296.50	296.50	296.50	296.50
ΦDN		70.00	70.00	70.00	70.00	70.00	102.00	102.00
L1		241.00	241.00	241.00	241.00	241.00	320.00	320.00
H1		99.50	111.50	127.00	142.00	158.00	177.50	206.50
H2		278.50	290.50	306.00	321.00	337.00	356.50	385.50
H		349.50	373.10	395.00	424.50	454.00	486.00	549.00
n-Φe	国标 DIN	4-19	4-19	8-19	8-19	8-19	8-23	8-23
	美标 ASTM	4-19	4-19	4-19	8-19	8-19	8-23	8-23
	日标 JIS	4-19	4-19	8-19	8-19	8-19	8-23	12-23
PN	MPa	1.60	1.60	1.60	1.60	1.60	1.60	1.00

尺寸 Size (*")	外形尺寸 Dimensions（mm）						
	D	H	H1	H2	S	L1	L2
10"	324.00	620.51	205.00	415.51	113.00	285.50	223.00
12"	336.60	722.24	228.00	494.24	114.40	342.50	323.00
14"	522.00	784.00	257.00	527.00	129.00	342.50	223.00
16"	586.00	850.00	288.00	562.00	159.00	342.50	323.00

配件明细 PARTS LIST

序号 No.	名称 Name	数量 Quantity	材料 Material
01	涡轮传动装置 Gear Drive Set	1	PVC-U
02	阀体 Body	1	PVC-U
03	挡圈 Retainer Ring	1	316L 不锈钢 Stainless Steel
04	定位套 Located Set	4	PP+GF
05	导向套 Guide Sleeve	1	PVC-U
06	阀板 Disc	1	PVC-U
07	传动杆 Shaft	1	316L 不锈钢 Stainless Steel
08	O 型圈 O-ring	2	EPDM
09	胶套 Rubber ring	1	EPDM
10	垫圈 Washer	1	316L 不锈钢 Stainless Steel
16	垫圈盖 Cover	1	PP+GF

