Catalog

www.zenithpura.com

Water Purification

Pure Water · Healthy Life



苏州新鼎汇环保科技有限公司

Suzhou Xindinghui Environmental Protection Technology Co., Ltd.

Table Of Contents 目录引索

RO Membrane Housing 不锈钢膜壳

BN1–R040 ---- 2
BN2–R040 ---- 3
BN3-RO40 ---- 4
BN5-RO40 ---- 5
BN6-RO80 ---- 6
BN7-RO80 ---- 7
BN8-RO80 ---- 8
BN9-RO80 ---- 9

Cartridge Filter Housing 精滤器

BN1 ---- 10
BN2 ---- 11
BN3 ---- 12
BN4 ---- 13
BN5 ---- 14
BN6 ---- 15
BN7 A型 B型 ---- 16
BN7 C型 D型 ---- 17
BN7 E型 ---- 18

Big flow filter 大流量过滤器

BN8-Filter Housing ---- 19
BN9-Filter Housing ---- 20
BN10-Filter Housing ---- 21

Sanitary Cartridge Filter Housing 卫生级精滤器

1RS ---- 22
DL–RS ---- 23

Bag Filter Housing 袋式过滤器

BFL ---- 24
BFH ---- 25
BFC ---- 26
BFM ---- 27

Basket Filter 篮式过滤器 ---- 28

Mechanical Filter 机械过滤器 ---- 29

Ion Exchanger 离子交换器 ---- 30

Softening Vessel 软化罐

Without Legs Type ---- 31
With Legs Type ---- 32

Water Tank 水箱 ---- 33

Heat exchanger 热交换器 ---- 34

Coupling 卡套 ---- 35



BN1-R040不锈钢膜壳

1、材质SUS304,SUS316L;
2、端盖材质ABS,SUS304,SUS316L;
3、最大工作压力250Psi;
4、表面抛光处理或拉丝处理。

BN1-R040
Stainless Steel RO Membrane Housing

Material:SUS304, SUS316L;
Material of end cap: ABS; SUS304; SUS316L;
Max working pressure 250Psi;
Polished or brushing external surface.

Standard specifications

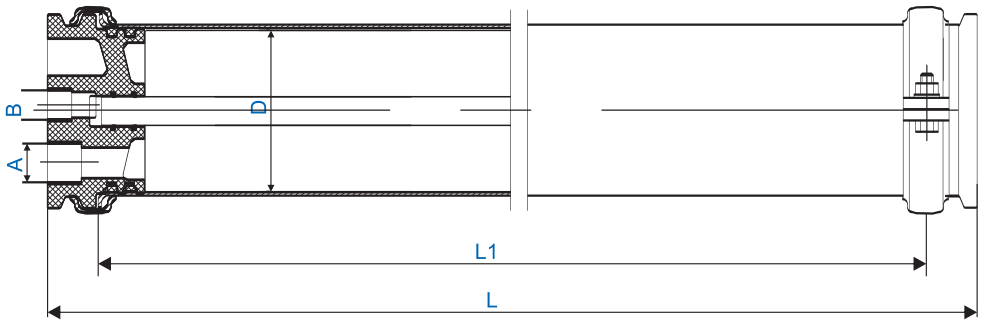

Model	L (mm)	L1 (mm)	D (mm)	A (in)	B (out)
BN1-2514	417	363	ϕ62	3/8 "	1/4 "
BN1-2521	594	540	ϕ62	3/8 "	1/4 "
BN1-2540	1082	1024	ϕ62	3/8 "	3/8 "
BN1-4014	427	367	ϕ102	1/2 "	1/2 "
BN1-4021	605	545	ϕ102	1/2 " 3/4 "	1/2 "
BN1-4040	1088	1028	ϕ102	1/2 " 3/4 "	1/2 "
BN1-4080	2104	2044	ϕ102	3/4 "	1/2 "
BN1-40120	3120	3060	ϕ102	3/4 "	1/2 "
BN1-40160	4136	4076	ϕ102	3/4 "	1/2 "

地址: 江苏省苏州市相城区元和街道宣公路588号元和塘科技文化研发社区1号楼5楼550室
ADD: Room 550, 5th Floor, Building 1,Yuanhetang Science and Technology Culture R&D Community,
No. 588 Xuangong Road, Yuanhe Street, Xiangcheng District, Suzhou City, Jiangsu Province.
TEL: +86 13913135613 / 18068082730
E-mail: sunny@zenithpura.com / Wendy@zenithpura.com
web: www.zenithpura.com



BN2-R040不锈钢膜壳

1、材质SUS304,SUS316L;
2、端盖材质ABS,SUS304,SUS316L;
3、最大工作压力250Psi;
4、表面抛光处理或拉丝处理。

BN2-R040
Stainless Steel RO Membrane Housing

Material:SUS304,SUS316L;
Material of end cap:ABS;SUS304;SUS316L;
Max working pressure 250Psi;
Polished or brushing external surface.

Standard specifications

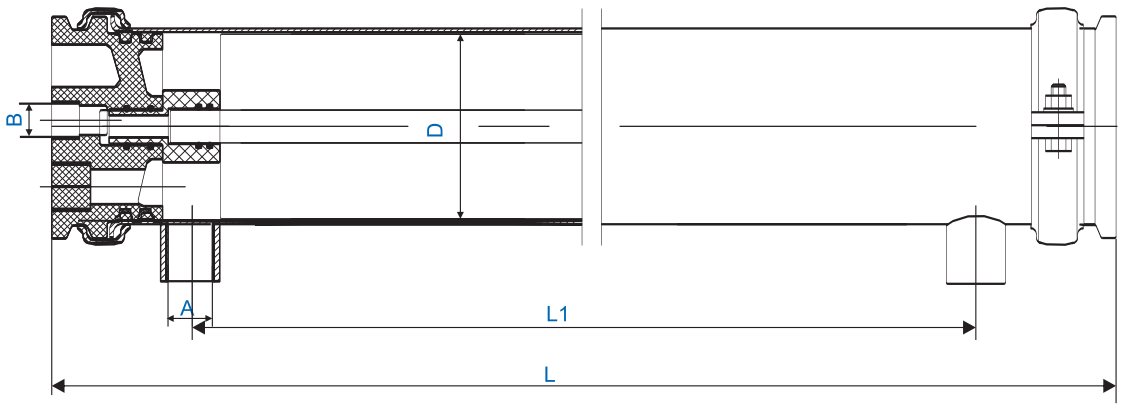

Model	L (mm)	L1 (mm)	D (mm)	A (in)	B (out)
BN2-2521	655	511	ϕ62	1/2 "	1/4 "
BN2-2540	1136	994	ϕ62	1/2 "	3/8 "
BN2-4021	668	515	ϕ102	3/4 "	1/2 "
BN2-4040	1148	998	ϕ102	3/4 "	1/2 "
BN2-4080	2164	2014	ϕ102	3/4 "	1/2 "
BN2-40120	3180	3030	ϕ102	3/4 "	1/2 "
BN2-40160	4196	4046	ϕ102	3/4 "	1/2 "

地址: 江苏省苏州市相城区元和街道宣公路588号元和塘科技文化研发社区1号楼5楼550室
ADD: Room 550, 5th Floor, Building 1,Yuanhetang Science and Technology Culture R&D Community,
No. 588 Xuangong Road, Yuanhe Street, Xiangcheng District, Suzhou City, Jiangsu Province.
TEL: +86 13913135613 / 18068082730
E-mail: sunny@zenithpura.com / Wendy@zenithpura.com
web: www.zenithpura.com

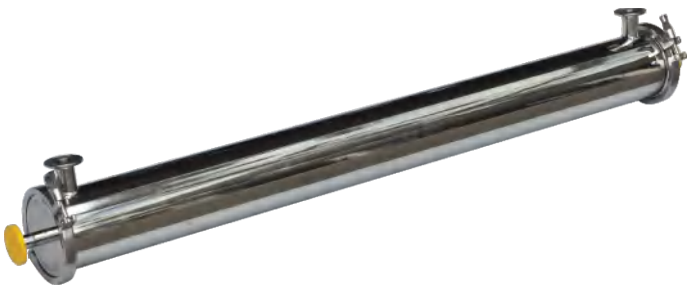

BN3-RO40 不锈钢膜壳

1. 材质 SUS304,SUS316L;
2. 最大工作压力 400 Psi;
3. 表面抛光处理或拉丝处理。

BN3-R040
Stainless Steel RO Membrane Housing

Material: SUS304, SUS316L;

Max working pressure 400 Psi;

Polished or brushing external surface.

Standard specifications

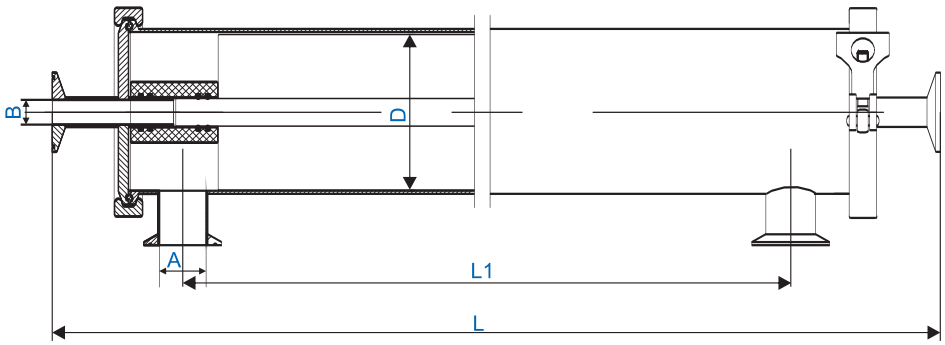

Model	L (mm)	L1 (mm)	D (mm)	A (in)	B (out)
BN3-2521	693	527	Φ62	3/4 "	3/4 "
BN3-2540	1176	1010	Φ62	3/4 "	3/4 "
BN3-4021	693	527	Φ102	1 "	3/4 "
BN3-4040	1176	1010	Φ102	1 "	3/4 "
BN3-4080	2192	2026	Φ102	1 "	3/4 "
BN3-40120	3208	3042	Φ102	1 " -1 1/4 "	3/4 "
BN3-40160	4224	4058	Φ102	1 " -1 1/4 "	3/4 "
BN3-8040	1366	1099	Φ203	1 1/2 " -2 "	1 1/2 "
BN3-8080	2382	2115	Φ203	1 1/2 " -2 "	1 1/2 "
BN3-80120	3398	3131	Φ203	1 1/2 " -2 "	1 1/2 "
BN3-80160	4414	4147	Φ203	1 1/2 " -2 "	1 1/2 "
BN3-80200	5430	5163	Φ203	1 1/2 " -2 "	1 1/2 "
BN3-80240	6446	6179	Φ203	1 1/2 " -2 "	1 1/2 "

地址: 江苏省苏州市相城区元和街道宣公路588号元和塘科技文化研发社区1号楼5楼550室
ADD: Room 550, 5th Floor, Building 1,Yuanhetang Science and Technology Culture R&D Community,
No. 588 Xuangong Road, Yuanhe Street, Xiangcheng District, Suzhou City, Jiangsu Province.
TEL: +86 13913135613 / 18068082730
E-mail: sunny@zenithpura.com / Wendy@zenithpura.com
web: www.zenithpura.com

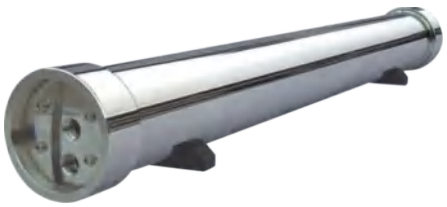

BN5-RO40 不锈钢膜壳

1．材质 SUS304,SUS316L;

2．最大工作压力 1000Psi;

3．表面抛光处理或拉丝处理。



BN5-RO40:

End-in type and Side-in type Stainless Steel RO Membrane Housing

Material: SUS304, SUS316L;

Max working pressure 1000 Psi;

Polished or brushing external surface .

Standard specifications

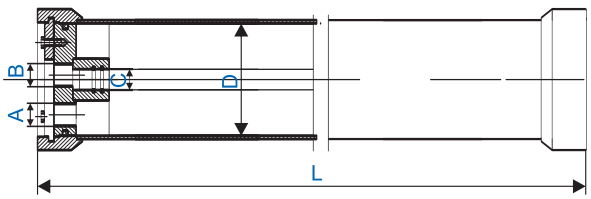

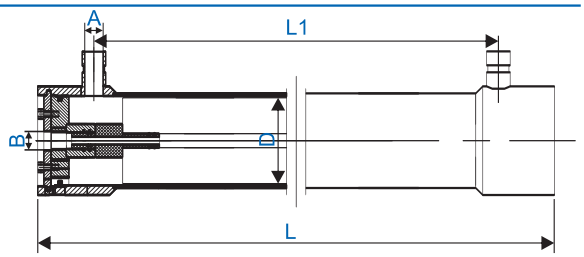

Model	L (mm)	C (mm)	D (mm)	A (in)	B (out)
BN5-4021-E	612	ϕ19.5	ϕ102	1/2 "	1/2 "
BN5-4040-E	1094	ϕ19.5	ϕ102	1/2 "	1/2 "
BN5-4080-E	2110	ϕ19.5	ϕ102	1/2 "	1/2 "
BN5-40120-E	3126	ϕ19.5	ϕ102	1/2 "	1/2 "
BN5-40160-E	4142	ϕ19.5	ϕ102	1/2 "	1/2 "

Model	L (mm)	L1 (mm)	D (mm)	A (in)	B (out)
BN5-2540-S	1162	1034	ϕ62	1/2 " -3/4 "	1/2 "
BN5-4021-S	730	602	ϕ102	3/4 " -1 "	1/2 "
BN5-4040-S	1212	1084	ϕ102	3/4 " -1 "	1/2 "
BN5-4080-S	2228	2100	ϕ102	3/4 " -1 "	1/2 "
BN5-40120-S	3244	3116	ϕ102	3/4 " -1 "	1/2 "
BN5-40160-S	4260	4132	ϕ102	3/4 " -1 "	1/2 "

地址: 江苏省苏州市相城区元和街道宣公路588号元和塘科技文化研发社区1号楼5楼550室
ADD: Room 550, 5th Floor, Building 1,Yuanhetang Science and Technology Culture R&D Community,
No. 588 Xuangong Road, Yuanhe Street, Xiangcheng District, Suzhou City, Jiangsu Province.
TEL: +86 13913135613 / 18068082730
E-mail: sunny@zenithpura.com / Wendy@zenithpura.com
web: www.zenithpura.com

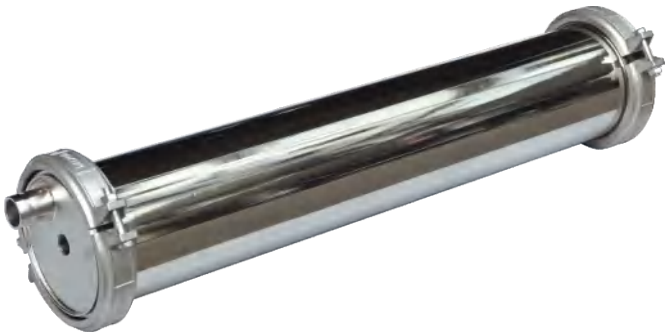

BN6-RO80 不锈钢膜壳

1. 材质 SUS304,SUS316L;
2. 最大工作压力 300Psi;
3. 表面抛光处理或亚光处理。

BN6-RO80
Stainless Steel RO Membrane Housing

Material: SUS304, SUS316L;

Max working pressure 300 Psi;

Polished or sandblast external surface .

Standard specifications

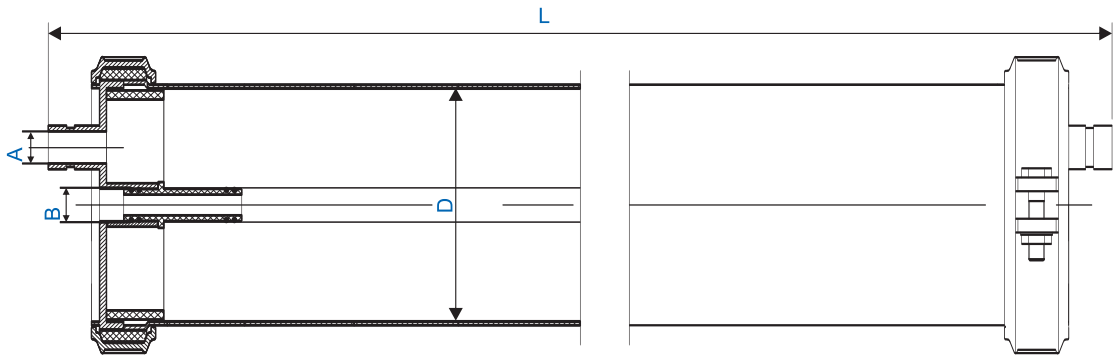

Model	L (mm)	D (mm)	A (in)	B (out)
BN6-8040	1232	ϕ203	1- 1/2 "	1 "
BN6-8080	2248	ϕ203	1- 1/2 "	1 "
BN6-80120	3264	ϕ203	1- 1/2 "	1 "
BN6-80160	4284	ϕ203	1- 1/2 "	1 "
BN6-80200	5300	ϕ203	1- 1/2 "	1 "
BN6-80240	6316	ϕ203	1- 1/2 "	1 "

地址: 江苏省苏州市相城区元和街道宣公路588号元和塘科技文化研发社区1号楼5楼550室
ADD: Room 550, 5th Floor, Building 1,Yuanhetang Science and Technology Culture R&D Community,
No. 588 Xuangong Road, Yuanhe Street, Xiangcheng District, Suzhou City, Jiangsu Province.
TEL: +86 13913135613 / 18068082730
E-mail: sunny@zenithpura.com / Wendy@zenithpura.com
web: www.zenithpura.com

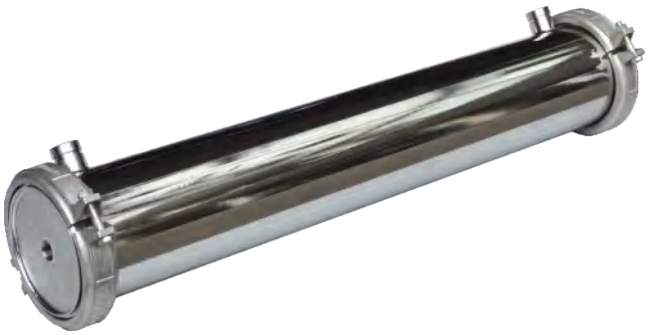

BN7-RO80 不锈钢膜壳

1. 材质 SUS304, SUS316L;
2. 最大工作压力 300 Psi;
3. 表面抛光处理或亚光处理。

BN7-RO80:

Stainless Steel RO Membrane Housing

Material: SUS304, SUS316L;

Max working pressure 300 Psi;

Polished or sandblast external surface .

Standard specifications

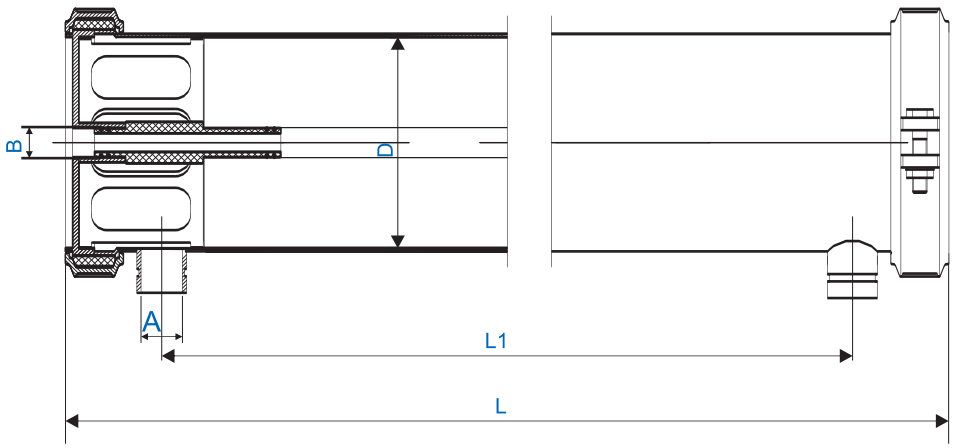

Model	L (mm)	L1 (mm)	D (mm)	A (in)	B (out)
BN7-8040	1288	1101	Φ203	1 1/2 "	1 "
BN7-8080	2304	2117	Φ203	1 1/2 "	1 "
BN7-80120	3320	3133	Φ203	1 1/2 "	1 "
BN7-80160	4336	4149	Φ203	1 1/2 "	1 "
BN7-80200	5352	5165	Φ203	1 1/2 "	1 "
BN7-80240	6368	6181	Φ203	1 1/2 "	1 "

地址: 江苏省苏州市相城区元和街道宣公路588号元和塘科技文化研发社区1号楼5楼550室
ADD: Room 550, 5th Floor, Building 1,Yuanhetang Science and Technology Culture R&D Community,
No. 588 Xuangong Road, Yuanhe Street, Xiangcheng District, Suzhou City, Jiangsu Province.
TEL: +86 13913135613 / 18068082730
E-mail: sunny@zenithpura.com / Wendy@zenithpura.com
web: www.zenithpura.com



BN8-RO80 不锈钢膜壳

1. 材质SUS304, SUS316L;
2. 最大工作压力 1000 Psi;
3. 表面抛光处理或亚光处理。

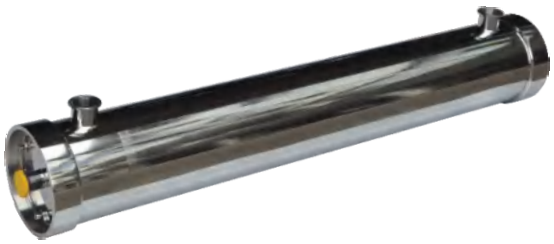

BN8-RO80

Victaulic–port type and Tri–clover port type Stainless Steel RO Membrane Housing

Material: SUS304, SUS316L;
Max working pressure 1000 Psi;
Polished or sandblast external surface.

Standard specifications

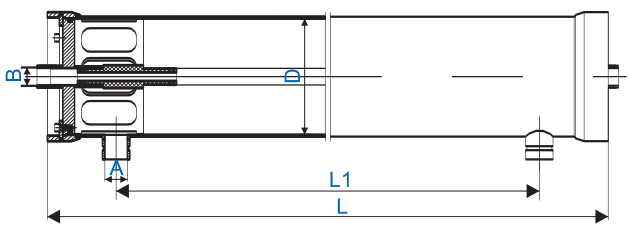

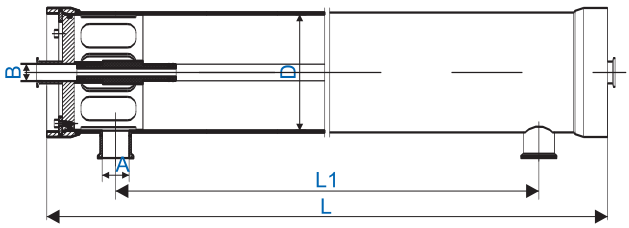

Model	L (mm)	L1 (mm)	D (mm)	A (in)	B (out)
BN8-8040-V	1359	1119	Φ203	1 1/2 " -3 "	1 "
BN8-8080-V	2375	2135	Φ203	1 1/2 " -3 "	1 "
BN8-80120-V	3391	3151	Φ203	1 1/2 " -3 "	1 "
BN8-80160-V	4407	4167	Φ203	1 1/2 " -3 "	1 "
BN8-80200-V	5423	5183	Φ203	1 1/2 " -3 "	1 "
BN8-80240-V	6439	6199	Φ203	1 1/2 " -3 "	1 "

Model	L (mm)	L1 (mm)	D (mm)	A (in)	B (out)
BN8-8040-T	1359	1119	Φ203	1 1/2 " -3 "	1 " -1/2 "
BN8-8080-T	2375	2135	Φ203	1 1/2 " -3 "	1 " -1/2 "
BN8-80120-T	3391	3151	Φ203	1 1/2 " -3 "	1 " -1/2 "
BN8-80160-T	4407	4167	Φ203	1 1/2 " -3 "	1 " -1/2 "
BN8-80200-T	5423	5183	Φ203	1 1/2 " -3 "	1 " -1/2 "
BN8-80240-T	6439	6199	Φ203	1 1/2 " -3 "	1 " -1/2 "

地址: 江苏省苏州市相城区元和街道宣公路588号元和塘科技文化研发社区1号楼5楼550室
ADD: Room 550, 5th Floor, Building 1,Yuanhetang Science and Technology Culture R&D Community,
No. 588 Xuangong Road, Yuanhe Street, Xiangcheng District, Suzhou City, Jiangsu Province.
TEL: +86 13913135613 / 18068082730
E-mail: sunny@zenithpura.com / Wendy@zenithpura.com
web: www.zenithpura.com



BN9-RO80 不锈钢膜壳

1. 材质SUS304, SUS316L;
2. 最大工作压力 600 Psi;
3. 表面抛光处理或亚光处理。

BN9-RO80

Victaulic–port type and Tri–clover port type Stainless Steel RO Membrane Housing

Material: SUS304, SUS316L;

Max working pressure 600 Psi;

Polished or sandblast external surface.

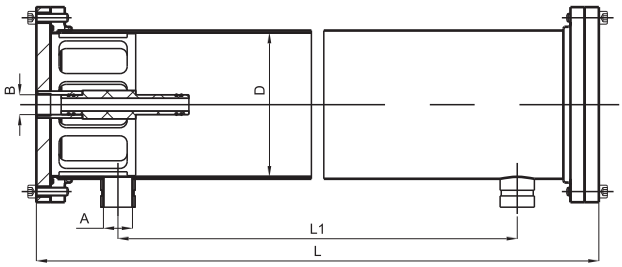

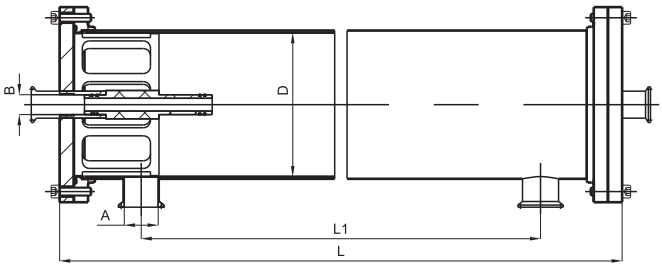

Standard specifications

Model	L (mm)	L1 (mm)	D (mm)	A (in)	B (out)
BN9-8040-V	1301	1071	Φ203	1 1/2 " -2 "	1 "
BN9-8080-V	2317	2087	Φ203	1 1/2 " -2 "	1 "
BN9-80120-V	3333	3103	Φ203	1 1/2 " -2 "	1 "
BN9-80160-V	4349	4119	Φ203	1 1/2 " -2 "	1 "
BN9-80200-V	5365	5135	Φ203	1 1/2 " -2 "	1 "
BN9-80240-V	6381	6151	Φ203	1 1/2 " -2 "	1 "

Model	L (mm)	L1 (mm)	D (mm)	A (in)	B (out)
BN9-8040-T	1301	1071	Φ203	1 1/2 " -2 "	1.5 "
BN9-8080-T	2317	2087	Φ203	1 1/2 " -2 "	1.5 "
BN9-80120-T	3333	3103	Φ203	1 1/2 " -2 "	1.5 "
BN9-80160-T	4349	4119	Φ203	1 1/2 " -2 "	1.5 "
BN9-80200-T	5365	5135	Φ203	1 1/2 " -2 "	1.5 "
BN9-80240-T	6381	6151	Φ203	1 1/2 " -2 "	1.5 "

地址: 江苏省苏州市相城区元和街道宣公路588号元和塘科技文化研发社区1号楼5楼550室
ADD: Room 550, 5th Floor, Building 1,Yuanhetang Science and Technology Culture R&D Community,
No. 588 Xuangong Road, Yuanhe Street, Xiangcheng District, Suzhou City, Jiangsu Province.
TEL: +86 13913135613 / 18068082730
E-mail: sunny@zenithpura.com / Wendy@zenithpura.com
web: www.zenithpura.com



BN1- 精滤器

1．材质 SUS304, SUS316L;
2．最大工作压力 100 Psi;
3．表面抛光处理或亚光处理。

BN1-Cartridge Filter Housing

Material: SUS304, SUS316L;
Max working pressure 100 Psi
Polished or sandblast external surface.



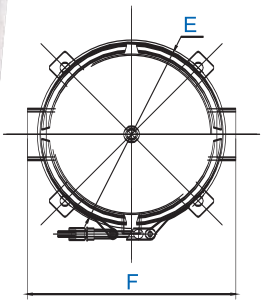

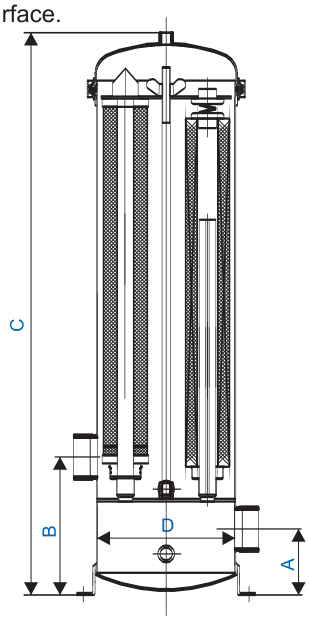

Standard specifications

Model	A (mm)	B (mm)	C (mm)	D (mm)	E (mm)	F (mm)	In/Out	Drain
BN1-W3L1	120	220	600	Φ170	Φ219	230	1 " -1 1/2 "	1/4 " -1/2 "
BN1-W3L2	120	220	850	Φ170	Φ219	230	1 " -1 1/2 "	1/4 " -1/2 "
BN1-W3L3	120	220	1100	Φ170	Φ219	230	1 " -2 "	1/4 " -1/2 "
BN1-W3L4	120	220	1350	Φ170	Φ219	230	1 " -2 "	1/4 " -1/2 "
BN1-W5L1	120	220	610	Φ200	Φ248	260	1 " -1 1/2 "	1/4 " -1/2 "
BN1-W5L2	120	220	860	Φ200	Φ248	260	1 " -1 1/2 "	1/4 " -1/2 "
BN1-W5L3	120	220	1110	Φ200	Φ248	260	1 " -2 "	1/4 " -1/2 "
BN1-W5L4	120	220	1360	Φ200	Φ248	260	1 " -2 "	1/4 " -1/2 "
BN1-W7L1	120	220	620	Φ250	Φ310	310	1 1/2 " -2 "	1/2 "
BN1-W7L2	120	220	870	Φ250	Φ310	310	1 1/2 " -2 "	1/2 "
BN1-W7L3	120	220	1120	Φ250	Φ310	310	1 1/2 " -2 1/2 "	1/2 "
BN1-W7L4	120	220	1370	Φ250	Φ310	310	1 1/2 " -2 1/2 "	1/2 "

地址: 江苏省苏州市相城区元和街道宣公路588号元和塘科技文化研发社区1号楼5楼550室
ADD: Room 550, 5th Floor, Building 1,Yuanhetang Science and Technology Culture R&D Community,
No. 588 Xuangong Road, Yuanhe Street, Xiangcheng District, Suzhou City, Jiangsu Province.
TEL: +86 13913135613 / 18068082730
E-mail: sunny@zenithpura.com / Wendy@zenithpura.com
web: www.zenithpura.com







BN2- 精滤器

1．材质 SUS304,SUS316L;
2．最大工作压力 100 Psi;
3．表面抛光处理或亚光处理。

BN2-Cartridge Filter Housing

Material: SUS304, SUS316L;

Max working pressure 100 Psi

Polished or sandblast external surface.

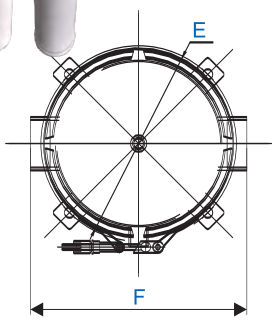

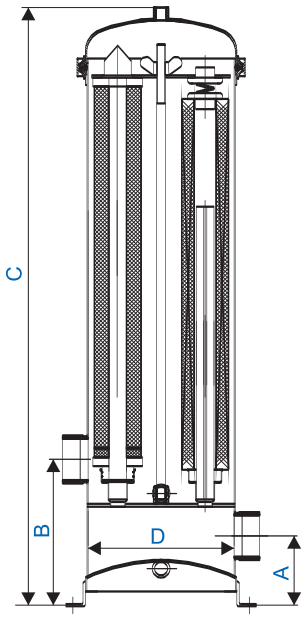

Standard specifications

Model	A (mm)	B (mm)	C (mm)	D (mm)	E (mm)	F (mm)	In/Out	Drain
BN2-W3L1	75	180	550	Φ170	Φ219	230	1 " -1 1/2 "	1/4 " -1/2 "
BN2-W3L2	75	180	800	Φ170	Φ219	230	1 " -1 1/2 "	1/4 " -1/2 "
BN2-W3L3	75	180	1050	Φ170	Φ219	230	1 " -2 "	1/4 " -1/2 "
BN2-W3L4	75	180	1300	Φ170	Φ219	230	1 " -2 "	1/4 " -1/2 "
BN2-W5L1	75	180	560	Φ200	Φ248	260	1 " -1 1/2 "	1/4 " -1/2 "
BN2-W5L2	75	180	810	Φ200	Φ248	260	1 " -1 1/2 "	1/4 " -1/2 "
BN2-W5L3	75	180	1060	Φ200	Φ248	260	1 " -2 "	1/4 " -1/2 "
BN2-W5L4	120	220	1360	Φ200	Φ248	260	1 " -2 "	1/4 " -1/2 "
BN2-W7L1	120	220	620	Φ250	Φ310	310	1 1/2 " -2 "	1/2 "
BN2-W7L2	120	220	870	Φ250	Φ310	310	1 1/2 " -2 "	1/2 "
BN2-W7L3	120	220	1120	Φ250	Φ310	310	1 1/2 " -2 1/2 "	1/2 "
BN2-W7L4	120	220	1370	Φ250	Φ310	310	1 1/2 " -2 1/2 "	1/2 "

地址: 江苏省苏州市相城区元和街道宣公路588号元和塘科技文化研发社区1号楼5楼550室
ADD: Room 550, 5th Floor, Building 1,Yuanhetang Science and Technology Culture R&D Community,
No. 588 Xuangong Road, Yuanhe Street, Xiangcheng District, Suzhou City, Jiangsu Province.
TEL: +86 13913135613 / 18068082730
E-mail: sunny@zenithpura.com / Wendy@zenithpura.com
web: www.zenithpura.com



BN3- 精滤器

1．材质 SUS304, SUS316L;
2．最大工作压力 150 Psi
3．表面抛光处理或亚光处理。

BN3-Cartridge Filter Housing

Material: SUS304, SUS316L;
Max design working pressure 150 Psi;
Polished or sandblast external surface .



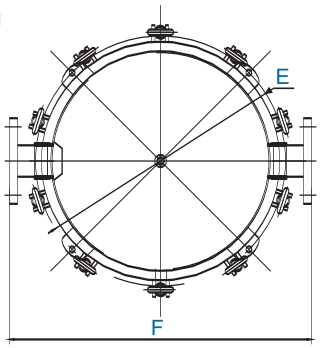

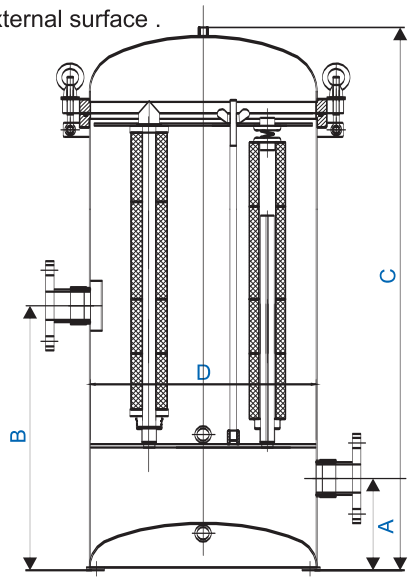

Standard specifications

Model	A (mm)	B (mm)	C (mm)	D (mm)	E (mm)	F (mm)	In/Out	Drain
BN3-W5L3	80	180	1090	Φ200	Φ248	344	1 1/2 " -2 "	1/2 "
BN3-W5L4	80	180	1340	Φ200	Φ248	344	1 1/2 " -2 "	1/2 "
BN3-W7L3	120	600	1160	Φ250	Φ310	410	1 1/2 " -2 "	1/2 "
BN3-W7L4	120	800	1410	Φ250	Φ310	410	1 1/2 " -2 "	1/2 "
BN3-W11L3	150	600	1170	Φ300	Φ360	460	2 " -3 "	1/2 "
BN3-W11L4	150	800	1420	Φ300	Φ360	460	2 " -3 "	1/2 "
BN3-W15L3	150	600	1180	Φ350	Φ410	530	2 " -3 "	3/4 "
BN3-W15L4	150	800	1430	Φ350	Φ410	530	2 " -3 "	3/4 "
BN3-W20L3	150	600	1190	Φ400	Φ460	560	2 " -4 "	3/4 "
BN3-W20L4	150	800	1440	Φ400	Φ460	560	2 " -4 "	3/4 "
BN3-W27L3	150	600	1200	Φ450	Φ510	630	2 " -4 "	3/4 "
BN3-W27L4	150	800	1450	Φ450	Φ510	630	2 " -4 "	3/4 "

地址: 江苏省苏州市相城区元和街道宣公路588号元和塘科技文化研发社区1号楼5楼550室
ADD: Room 550, 5th Floor, Building 1,Yuanhetang Science and Technology Culture R&D Community,
No. 588 Xuangong Road, Yuanhe Street, Xiangcheng District, Suzhou City, Jiangsu Province.
TEL: +86 13913135613 / 18068082730
E-mail: sunny@zenithpura.com / Wendy@zenithpura.com
web: www.zenithpura.com





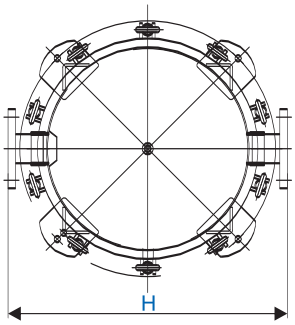

BN4- 精滤器

1．材质 SUS304, SUS316L;
2．最大工作压力 150 Psi;
3．表面抛光处理或亚光处理。

BN4-Cartridge Filter Housing

Material: SUS304, SUS316L;
Max working pressure 150 Psi;
Polished or sandblast external surface.

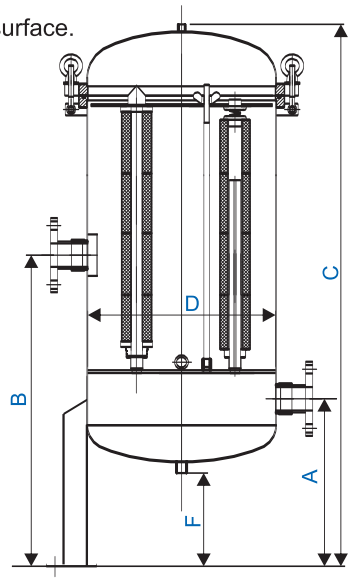

Standard specifications

Model	A (mm)	B (mm)	C (mm)	D (mm)	F (mm)	H (mm)	In/Out	Drain
BN4-W5L3	250	600	1250	ϕ200	150	340	1 1/2 " -2 "	1/2 "
BN4-W5L4	250	700	1500	ϕ200	150	340	1 1/2 " -2 "	1/2 "
BN4-W7L3	300	700	1300	ϕ250	150	390	1 1/2 " -2 "	1/2 "
BN4-W7L4	300	800	1550	ϕ250	150	390	1 1/2 " -2 "	1/2 "
BN4-W11L3	360	700	1380	ϕ300	200	440	2 " -3 "	1/2 "
BN4-W11L4	360	900	1620	ϕ300	200	440	2 " -3 "	1/2 "
BN4-W15L3	380	800	1420	ϕ350	200	530	2 " -3 "	3/4 "
BN4-W15L4	380	900	1660	ϕ350	200	530	2 " -3 "	3/4 "
BN4-W20L3	400	800	1460	ϕ400	200	560	2 " -4 "	3/4 "
BN4-W20L4	400	900	1700	ϕ400	200	560	2 " -4 "	3/4 "
BN4-W27L3	460	800	1530	ϕ450	250	630	2 " -4 "	3/4 "
BN4-W27L4	460	1000	1770	ϕ450	250	630	2 " -4 "	3/4 "

地址: 江苏省苏州市相城区元和街道宣公路588号元和塘科技文化研发社区1号楼5楼550室
ADD: Room 550, 5th Floor, Building 1,Yuanhetang Science and Technology Culture R&D Community,
No. 588 Xuangong Road, Yuanhe Street, Xiangcheng District, Suzhou City, Jiangsu Province.
TEL: +86 13913135613 / 18068082730
E-mail: sunny@zenithpura.com / Wendy@zenithpura.com
web: www.zenithpura.com



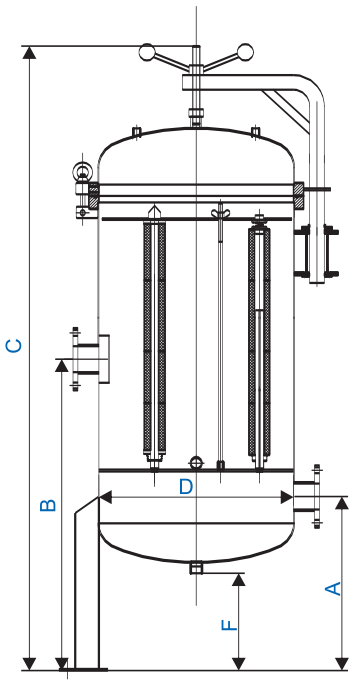

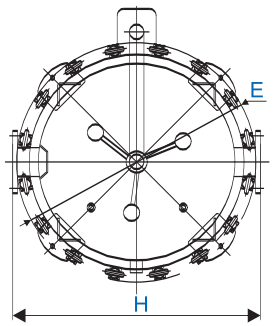

BN5- 精滤器

1. 材质 SUS304, SUS316L;
2. 最大工作压力 150 Psi;
3. 表面抛光处理或亚光处理。

BN5-Cartridge Filter Housing

Material: SUS304, SUS316L;

Max design working pressure 150 Psi

Polished or sandblast external surface.

Model	A (mm)	B (mm)	C (mm)	D (mm)	F (mm)	H (mm)	In/Out	Drain
BN5-W15L3	370	800	1580	Φ350	200	490	1 1/2 " -2 "	3/4 "
BN5-W15L4	370	900	1830	Φ350	200	490	1 1/2 " -2 "	3/4 "
BN5-W20L3	390	900	1630	Φ400	200	560	2 " -3 "	3/4 "
BN5-W20L4	390	1000	1880	Φ400	200	560	2 " -3 "	3/4 "
BN5-W27L3	460	900	1680	Φ450	250	610	2 " -4 "	3/4 "
BN5-W27L4	460	1100	1930	Φ450	250	610	2 " -4 "	3/4 "
BN5-W30L3	480	900	1740	Φ500	250	660	2 " -4 "	1 "
BN5-W30L4	480	1100	1990	Φ500	250	660	2 " -4 "	1 "
BN5-W36L3	500	900	1780	Φ550	250	710	2.5 " -4 "	1 "
BN5-W36L4	500	1100	2030	Φ550	250	710	2.5 " -4 "	1 "
BN5-W40L3	560	1000	1850	Φ600	300	760	2 1/2 " -4 "	1 "
BN5-W40L4	560	1200	2100	Φ600	300	760	2 1/2 " -4 "	1 "
BN5-W50L3	580	1000	1880	Φ650	300	810	3 " -4 "	1 "
BN5-W50L4	580	1200	2130	Φ650	300	810	3 " -4 "	1 "
BN5-W60L3	590	1000	1900	Φ700	300	880	3 " -5 "	1 "
BN5-W60L4	590	1200	2150	Φ700	300	880	3 " -5 "	1 "
BN5-W75L3	610	1000	1950	Φ750	300	950	3 " -5 "	1-1/2 "
BN5-W75L4	610	1250	2200	Φ750	300	950	3 " -5 "	1-1/2 "
BN5-W80L3	620	1100	1970	Φ800	300	1000	4 " -6 "	1-1/2 "
BN5-W80L4	620	1250	2220	Φ800	300	1000	4 " -6 "	1-1/2 "
BN5-W90L3	650	1100	2140	Φ850	300	1000	4 " -6 "	1-1/2 "
BN5-W90L4	650	1250	2390	Φ850	300	1000	4 " -6 "	1-1/2 "
BN5-W100L3	670	1100	2070	Φ900	300	1140	4 " -6 "	1-1/2 "
BN5-W100L4	670	1350	2320	Φ900	300	1140	4 " -6 "	1-1/2 "
BN5-W120L3	750	1200	2170	Φ1000	350	1240	4 " -6 "	1-1/2 "
BN5-W120L4	750	1400	2420	Φ1000	350	1240	4 " -6 "	1-1/2 "
BN5-W140L3	830	1300	2350	Φ1100	350	1400	4 " -6 "	2 "
BN5-W140L4	830	1500	2600	Φ1100	350	1400	4 " -6 "	2 "
BN5-W160L3	860	1300	2400	Φ1200	350	1500	6 " -10 "	2 "
BN5-W160L4	860	1500	2650	Φ1200	350	1500	6 " -10 "	2 "

地址: 江苏省苏州市相城区元和街道宣公路588号元和塘科技文化研发社区1号楼5楼550室
ADD: Room 550, 5th Floor, Building 1,Yuanhetang Science and Technology Culture R&D Community,
No. 588 Xuangong Road, Yuanhe Street, Xiangcheng District, Suzhou City, Jiangsu Province.
TEL: +86 13913135613 / 18068082730
E-mail: sunny@zenithpura.com / Wendy@zenithpura.com
web: www.zenithpura.com



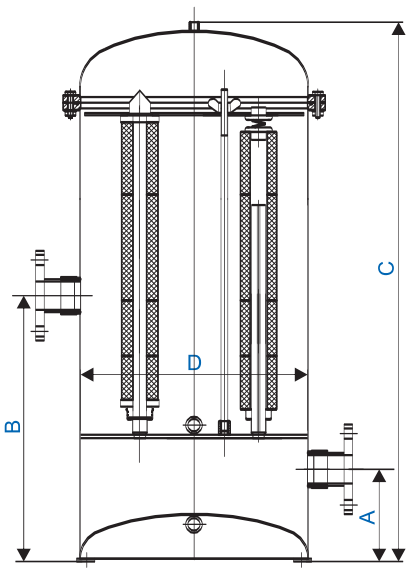

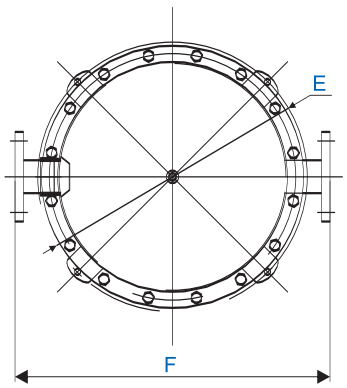

BN6- 精滤器

1. 材质 SUS304, SUS316L;
2. 最大工作压力 150 Psi;
3. 表面抛光处理或亚光处理。

BN6-Cartridge Filter Housing

Material: SUS304, SUS316L;

Max working pressure150Psi;

Polished or sandblast external surface .

Model	A (mm)	B (mm)	C (mm)	D (mm)	F (mm)	In/Out	Drain
BN6-W5L3	75	180	1060	Φ200	320	1 " -2 "	1/4 "
BN6-W5L4	75	180	1310	Φ200	320	1 " -2 "	1/4 "
BN6-W7L3	80	180	1120	Φ250	390	1 1/2 " -2 "	1/2 "
BN6-W7L4	80	180	1370	Φ250	390	1 1/2 " -2 "	1/2 "
BN6-W11L3	150	600	1170	Φ300	440	2 " -3 "	1/2 "
BN6-W11L4	150	800	1420	Φ300	440	2 " -3 "	1/2 "
BN6-W15L3	150	600	1180	Φ350	490	2 " -3 "	3/4 "
BN6-W15L4	150	800	1430	Φ350	490	2 " -3 "	3/4 "
BN6-W20L3	150	600	1190	Φ400	560	2 " -4 "	3/4 "
BN6-W20L4	150	800	1440	Φ400	560	2 " -4 "	3/4 "
BN6-W27L3	150	600	1200	Φ450	610	2 " -4 "	3/4 "
BN6-W27L4	150	800	1450	Φ450	610	2 " -4 "	3/4 "
BN6-W30L3	150	600	1220	Φ500	660	2 " -4 "	1 "
BN6-W30L4	150	800	1470	Φ500	660	2 " -4 "	1 "
BN6-W36L3	150	600	1240	Φ550	730	2 1/2 " -4 "	1 "
BN6-W36L4	150	800	1490	Φ550	730	2 1/2 " -4 "	1 "
BN6-W40L3	150	600	1320	Φ600	760	2 1/2 " -4 "	1 "
BN6-W40L4	150	800	1570	Φ600	760	2 1/2 " -4 "	1 "
BN6-W50L3	150	700	1330	Φ650	830	3 " -4 "	1 "
BN6-W50L4	150	900	1580	Φ650	830	3 " -4 "	1 "
BN6-W60L3	150	700	1340	Φ700	880	3 " -5 "	1 "
BN6-W60L4	150	900	1590	Φ700	880	3 " -5 "	1 "
BN6-W75L3	200	700	1360	Φ750	950	3 " -5 "	1-1/2 "
BN6-W75L4	200	900	1610	Φ750	950	3 " -5 "	1-1/2 "
BN6-W80L3	200	700	1380	Φ800	1000	4 " -6 "	1-1/2 "
BN6-W80L4	200	900	1630	Φ800	1000	4 " -6 "	1-1/2 "
BN6-W90L3	200	700	1380	Φ850	1000	4 " -6 "	1-1/2 "
BN6-W90L4	200	900	1630	Φ850	1000	4 " -6 "	1-1/2 "
BN6-W100L3	200	700	1400	Φ900	1140	4 " -6 "	1-1/2 "
BN6-W100L4	200	900	1650	Φ900	1140	4 " -6 "	1-1/2 "
BN6-W120L3	250	800	1480	Φ1000	1240	4 " -6 "	1-1/2 "
BN6-W120L4	250	1000	1730	Φ1000	1240	4 " -6 "	1-1/2 "
BN6-W140L3	250	800	1510	Φ1100	1400	4 " -6 "	2 "
BN6-W140L4	250	1000	1760	Φ1100	1400	4 " -6 "	2 "
BN6-W160L3	250	800	1560	Φ1200	1500	6 " -10 "	2 "
BN6-W160L4	250	1000	1810	Φ1200	1500	6 " -10 "	2 "

地址: 江苏省苏州市相城区元和街道宣公路588号元和塘科技文化研发社区1号楼5楼550室
ADD: Room 550, 5th Floor, Building 1,Yuanhetang Science and Technology Culture R&D Community,
No. 588 Xuangong Road, Yuanhe Street, Xiangcheng District, Suzhou City, Jiangsu Province.
TEL: +86 13913135613 / 18068082730
E-mail: sunny@zenithpura.com / Wendy@zenithpura.com
web: www.zenithpura.com

BN7-A 型



BN7-B 型











BN7- 单芯滤器

1. 材质 SUS304, SUS316L;
2. 最大工作压力 100 Psi;
3. 表面抛光处理或亚光处理。

BN7-Single Cartridge Filter Housing

Material: SUS304, SUS316L;

Max working pressure 100 Psi;

Polished or sandblast external surface .



Standard specifications

Model	A (mm)	B (mm)	C (mm)	In/Out
BN7-10″	275	355	Φ89	1/2 " ,1 "
BN7-20″	525	605	Φ89	3/4 " ,1 "
BN7-30″	775	855	Φ89	1 "
BN7-40″	1025	1105	Φ89	1 "

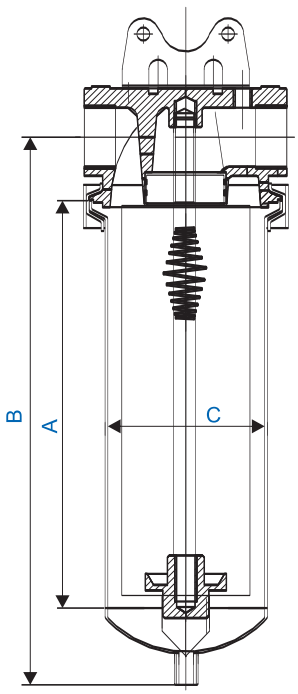

地址: 江苏省苏州市相城区元和街道宣公路588号元和塘科技文化研发社区1号楼5楼550室
ADD: Room 550, 5th Floor, Building 1,Yuanhetang Science and Technology Culture R&D Community,
No. 588 Xuangong Road, Yuanhe Street, Xiangcheng District, Suzhou City, Jiangsu Province.
TEL: +86 13913135613 / 18068082730
E-mail: sunny@zenithpura.com / Wendy@zenithpura.com
web: www.zenithpura.com

BN7-C 型　　BN7-D 型



BN7- 单芯滤器

1. 材质 SUS304, SUS316L;
2. 最大工作压力 100 Psi;
3. 表面抛光处理或亚光处理。

BN7-Single Cartridge Filter Housing

Material: SUS304, SUS316L;

Max working pressure 100 Psi;

Polished or sandblast external surface .



Standard specifications

Model	A (mm)	B (mm)	C (mm)	In/Out
BN7-10″	280	345	Φ88	3/4 " ,1 "
BN7-20″	534	599	Φ88	3/4 " ,1 "
BN7-30″	788	853	Φ88	1 "
BN7-40″	1042	1107	Φ88	1 "

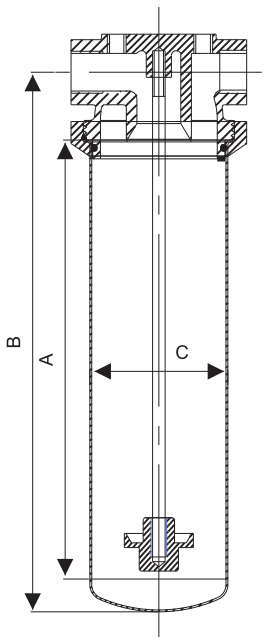

地址: 江苏省苏州市相城区元和街道宣公路588号元和塘科技文化研发社区1号楼5楼550室
ADD: Room 550, 5th Floor, Building 1,Yuanhetang Science and Technology Culture R&D Community,
No. 588 Xuangong Road, Yuanhe Street, Xiangcheng District, Suzhou City, Jiangsu Province.
TEL: +86 13913135613 / 18068082730
E-mail: sunny@zenithpura.com / Wendy@zenithpura.com
web: www.zenithpura.com



BN7-E一单芯滤器

1.材质SUS304,SUS316L;

2.最大工作压力150Psi;

3.表面抛光处理或亚光处理。

BN7-E-Single Cartridge Filter Housing

Material:SUS304,SUS316L;

Max working pressure150Psi;

Polished or sandblast external surface.

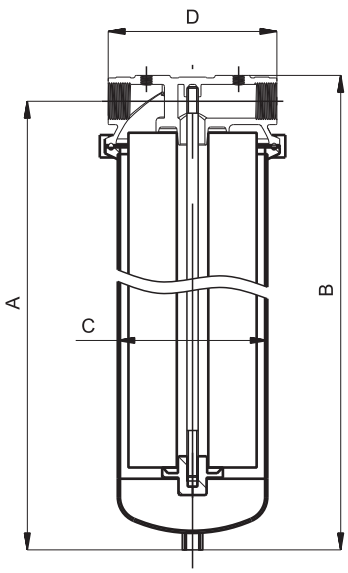

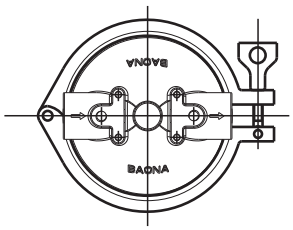

Standard specifications

Model	A (mm)	B (mm)	C (mm)	D (mm)	In/Out
BN7-10″-E	355	378	Φ133	150	1 "
BN7-20″-E	605	628	Φ133	150	1 "
BN7-30″-E	855	878	Φ133	150	1 "
BN7-40″-E	1105	1128	Φ133	150	1 "

地址: 江苏省苏州市相城区元和街道宣公路588号元和塘科技文化研发社区1号楼5楼550室
ADD: Room 550, 5th Floor, Building 1,Yuanhetang Science and Technology Culture R&D Community,
No. 588 Xuangong Road, Yuanhe Street, Xiangcheng District, Suzhou City, Jiangsu Province.
TEL: +86 13913135613 / 18068082730
E-mail: sunny@zenithpura.com / Wendy@zenithpura.com
web: www.zenithpura.com



BN8- 过滤器

1. 材质 SUS304, SUS316L;
2. 最大工作压力 150 Psi;
3. 表面抛光处理或亚光处理。

BN8-Filter Housing

Material: SUS304, SUS316L;

Max working pressure 150 Psi;

Polished or sandblast external face.



Standard specifications

Model	A (mm)	B (mm)	C (mm)	D (mm)	E (mm)	F (mm)	H (mm)	In/Out	Drain
BN8-W1L4	330	1370	1600	ϕ200	315	185	364	3 "	1/2 "
BN8-W2L4	480	1510	2070	ϕ450	590	250	655	4 "	3/4 "
BN8-W3L4	480	1510	2110	ϕ500	645	230	706	5 "	1 "
BN8-W4L4	500	1530	2160	ϕ550	705	230	756	5 "	1 "
BN8-W5L4	560	1590	2220	ϕ600	745	265	806	5 "	1 "
BN8-W6L4	580	1600	2240	ϕ650	810	260	896	6 "	1 "
BN8-W7L4	590	1610	2300	ϕ700	862	230	946	8 "	1 "
BN8-W8L4	610	1630	2360	ϕ750	930	240	996	8 "	1 1/2 "
BN8-W9L4	620	1640	2390	ϕ800	980	235	1046	8 "	1 1/2 "
BN8-W10L4	650	1670	2420	ϕ850	1045	250	1096	8 "	1 1/2 "

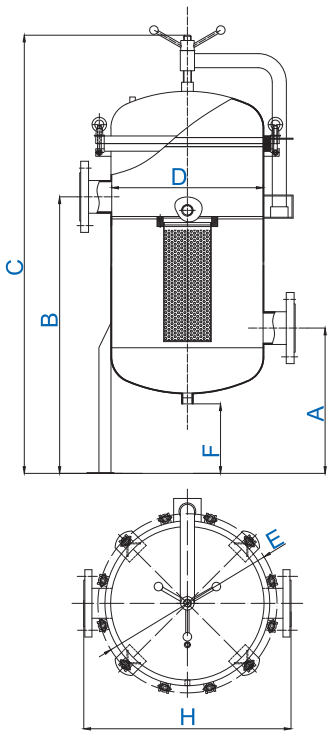

地址: 江苏省苏州市相城区元和街道宣公路588号元和塘科技文化研发社区1号楼5楼550室
ADD: Room 550, 5th Floor, Building 1,Yuanhetang Science and Technology Culture R&D Community,
No. 588 Xuangong Road, Yuanhe Street, Xiangcheng District, Suzhou City, Jiangsu Province.
TEL: +86 13913135613 / 18068082730
E-mail: sunny@zenithpura.com / Wendy@zenithpura.com
web: www.zenithpura.com





BN9- 过滤器

1. 材质 SUS304, SUS316L;
2. 最大工作压力 150 Psi;
3. 表面抛光处理或亚光处理。

BN9-Filter Housing

Material: SUS304, SUS316L;

Max working pressure 150 Psi;

Polished or sandblast external face.

Standard specifications

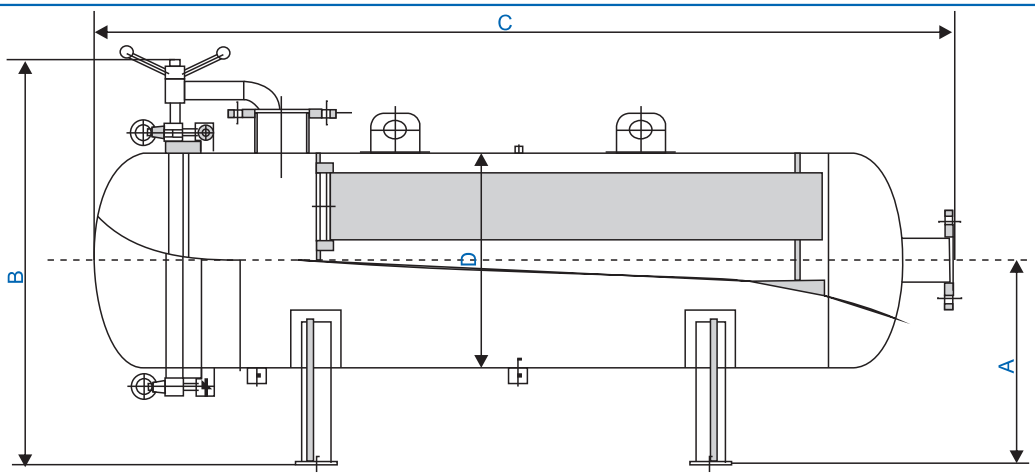

Model	A (mm)	B (mm)	C (mm)	D (mm)	In/Out	Drain
BN9-1×40″	350	530	1270	ϕ200	2″ -3 "	1/2 "
BN9-2×40″	500	960	1670	ϕ450	3″ -4 "	1 "
BN9-3×40″	580	1070	1810	ϕ500	4″ -6 "	1 "
BN9-4×40″	600	1110	1850	ϕ550	4″ -6 "	1 "
BN9-5×40″	630	1170	1800	ϕ600	5″ -6 "	1 "
BN9-6×40″	660	1230	1820	ϕ650	5″ -6 "	1 "
BN9-7×40″	690	1280	1840	ϕ700	6″ -8 "	1 "
BN9-8×40″	720	1360	1860	ϕ750	6″ -8 "	1 1/2 "
BN9-9×40″	750	1410	1880	ϕ800	6″ -8 "	1 1/2 "
BN9-10×40″	780	1470	1910	ϕ850	6″ -8 "	1 1/2 "

地址: 江苏省苏州市相城区元和街道宣公路588号元和塘科技文化研发社区1号楼5楼550室
ADD: Room 550, 5th Floor, Building 1,Yuanhetang Science and Technology Culture R&D Community,
No. 588 Xuangong Road, Yuanhe Street, Xiangcheng District, Suzhou City, Jiangsu Province.
TEL: +86 13913135613 / 18068082730
E-mail: sunny@zenithpura.com / Wendy@zenithpura.com
web: www.zenithpura.com



BN10- 精滤器

1.材质SUS304,SUS316L;
2.最大工作压力150PSI;
3.表面抛光处理或亚光处理。

BN10-Cartridge Filter Housing

Material:SUS304,SUS316L;
Max working pressure150Psi;
Polished or sandblast external surface.

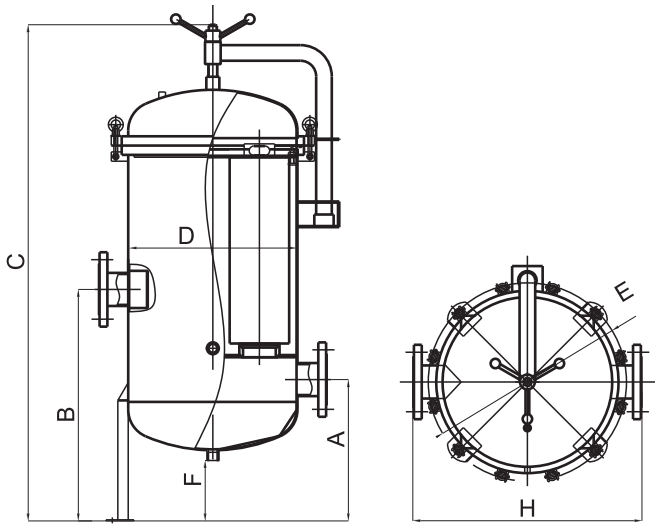

Standard specifications

Model	A (mm)	B (mm)	C (mm)	D (mm)	E (mm)	F (mm)	H (mm)	In/Out	Drain
BN10-W1L4	300	800	1550	ϕ250	370	150	410	2-3 "	1/2 "
BN10-W2L4	370	900	1830	ϕ350	460	200	550	3-4 "	3/4 "
BN10-W2L4	390	1000	1900	ϕ400	530	190	600	4-5 "	3/4 "
BN10-W3L4	460	1100	1990	ϕ450	590	250	650	4-5 "	3/4 "
BN10-W4L4	480	1100	2050	ϕ500	645	230	740	5-6 "	1 "
BN10-W6L4	500	1100	2080	ϕ550	705	240	790	5-6 "	1 "
BN10-W7L4	560	1200	2160	ϕ600	745	290	840	5-6 "	1 "
BN10-W8L4	580	1200	2190	ϕ650	810	300	890	5-6 "	1 "
BN10-W9L4	590	1200	2230	ϕ700	862	280	940	6-8 "	1 "
BN10-W10L4	610	1250	2260	ϕ750	930	290	990	6-8 "	1 1/2 "
BN10-W13L4	620	1250	2300	ϕ800	980	270	1040	6-8 "	1 1/2 "
BN10-W18L4	670	1350	2380	ϕ900	1115	290	1140	6-8 "	1 1/2 "

地址: 江苏省苏州市相城区元和街道宣公路588号元和塘科技文化研发社区1号楼5楼550室
ADD: Room 550, 5th Floor, Building 1,Yuanhetang Science and Technology Culture R&D Community,
No. 588 Xuangong Road, Yuanhe Street, Xiangcheng District, Suzhou City, Jiangsu Province.
TEL: +86 13913135613 / 18068082730
E-mail: sunny@zenithpura.com / Wendy@zenithpura.com
web: www.zenithpura.com

单芯卫生级过滤器

1.材质SUS304，SUS316L；
2.最大工作压力150Psi；
3.表面抛光处理。

1RS

Material: SUS304, SUS316L;
Max working pressure 150 Psi;
Polished finishing.



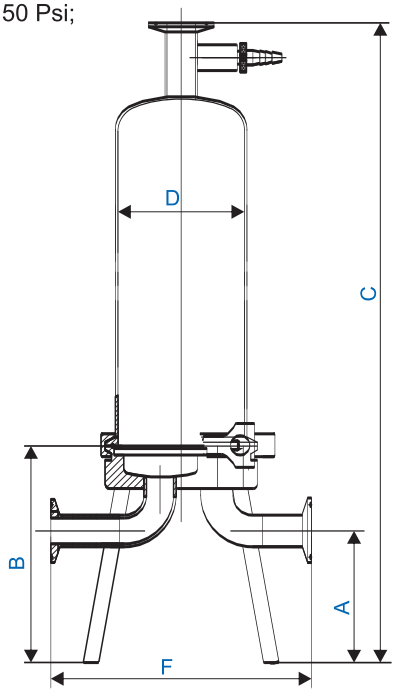



Standard specifications

Model	A (mm)	B (mm)	C (mm)	D (mm)	F (mm)	In/Out
1RS1	105	165	560	Φ102	185	1 "
1RS2	105	165	810	Φ102	185	1 "
1RS3	105	165	1060	Φ102	185	1 "

地址: 江苏省苏州市相城区元和街道宣公路588号元和塘科技文化研发社区1号楼5楼550室
ADD: Room 550, 5th Floor, Building 1,Yuanhetang Science and Technology Culture R&D Community,
No. 588 Xuangong Road, Yuanhe Street, Xiangcheng District, Suzhou City, Jiangsu Province.
TEL: +86 13913135613 / 18068082730
E-mail: sunny@zenithpura.com / Wendy@zenithpura.com
web: www.zenithpura.com



多芯卫生级过滤器

1.材质SUS304，SUS316L;

2.最大工作压力150 Psi;

3.表面抛光处理。

DL-RS

Material: SUS304, SUS316L;

Max working pressure 150 Psi;

Polished finishing.



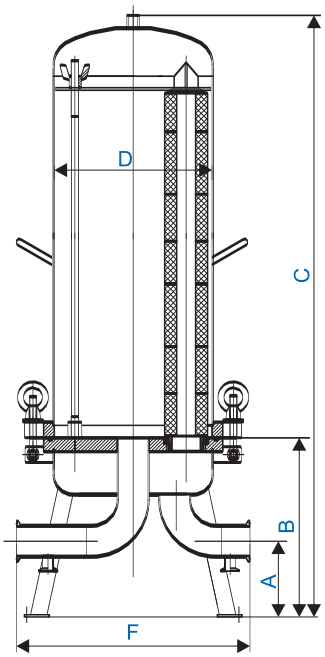

Standard specifications

Model	A (mm)	B (mm)	C (mm)	D (mm)	F (mm)	In/Out
3RS3	100	180	1160	ϕ200	300	1
6RS3	100	250	1160	ϕ250	400	1-1/2 "
8RS3	100	265	1175	ϕ300	440	2 "
10RS3	100	265	1175	ϕ300	440	2 "
12RS3	120	330	1240	ϕ350	490	3 "
16RS3	120	350	1260	ϕ400	540	3 "
20RS3	120	360	1270	ϕ450	590	3 "

地址: 江苏省苏州市相城区元和街道宣公路588号元和塘科技文化研发社区1号楼5楼550室
ADD: Room 550, 5th Floor, Building 1,Yuanhetang Science and Technology Culture R&D Community,
No. 588 Xuangong Road, Yuanhe Street, Xiangcheng District, Suzhou City, Jiangsu Province.
TEL: +86 13913135613 / 18068082730
E-mail: sunny@zenithpura.com / Wendy@zenithpura.com
web: www.zenithpura.com



BFL 袋滤器

1．材质 SUS304, SUS316L;
2．最大工作压力 100 Psi;
3．表面抛光处理或亚光处理。

BFL-Bag Filter Housing

Material: SUS304, SUS316L;
Max working pressure 100 Psi;
Polished or sandblast external surface.

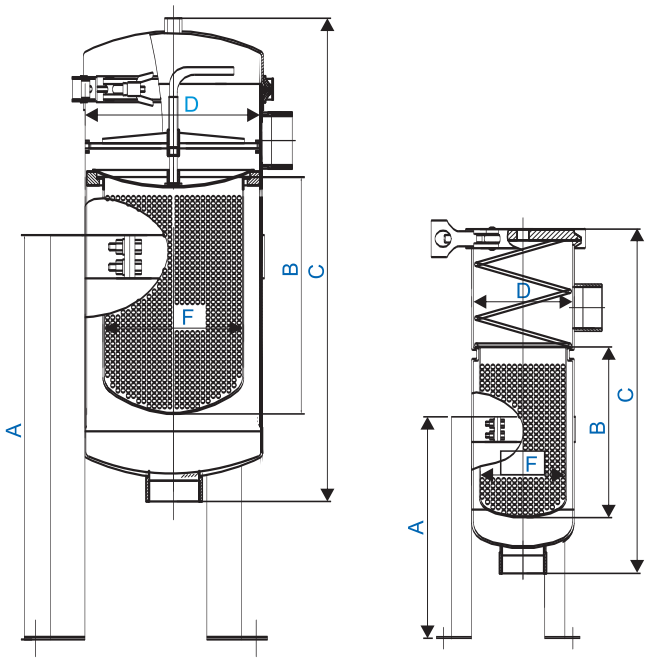

Standard specifications

Model	A (mm)	B (mm)	C (mm)	D (mm)	F (mm)	In/Out
BFL-1	500	380	700	Φ200	Φ170	1 " -3 "
BFL-2	700	720	1050	Φ200	Φ170	1 " -3 "
BFL-3	350	210	400	Φ114	Φ97	3/4 " -2 "
BFL-4	500	340	540	Φ114	Φ97	3/4 " -2 "

地址: 江苏省苏州市相城区元和街道宣公路588号元和塘科技文化研发社区1号楼5楼550室
ADD: Room 550, 5th Floor, Building 1,Yuanhetang Science and Technology Culture R&D Community,
No. 588 Xuangong Road, Yuanhe Street, Xiangcheng District, Suzhou City, Jiangsu Province.
TEL: +86 13913135613 / 18068082730
E-mail: sunny@zenithpura.com / Wendy@zenithpura.com
web: www.zenithpura.com



BFH袋滤器

1. 材质 SUS304, SUS316L;
2. 最大工作压力 150 Psi;
3. 表面抛光处理或亚光处理。

BFH-Bag Filter Housing

Material: SUS304, SUS316L;

Max working pressure 150 Psi;

Polished or sandblast external surface .

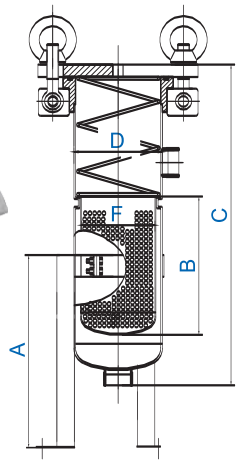

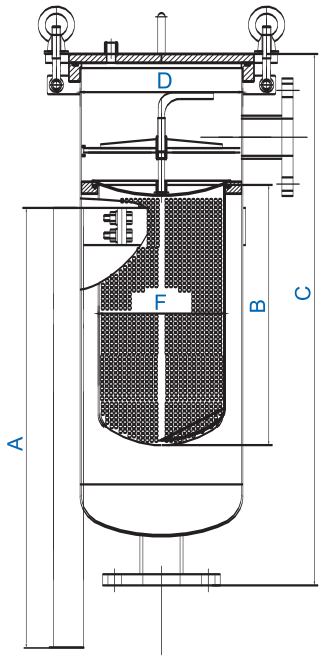

Standard specifications

Model	A (mm)	B (mm)	C (mm)	D (mm)	F (mm)	In/Out
BFH-1	500	380	720	Φ219	Φ170	1 " -3 "
BFH-2	700	720	1070	Φ219	Φ170	1 " -3 "
BFH-3	350	210	430	Φ114	Φ97	3/4 " -2 "
BFH-4	500	340	580	Φ114	Φ97	3/4 " -2 "

地址: 江苏省苏州市相城区元和街道宣公路588号元和塘科技文化研发社区1号楼5楼550室
ADD: Room 550, 5th Floor, Building 1,Yuanhetang Science and Technology Culture R&D Community,
No. 588 Xuangong Road, Yuanhe Street, Xiangcheng District, Suzhou City, Jiangsu Province.
TEL: +86 13913135613 / 18068082730
E-mail: sunny@zenithpura.com / Wendy@zenithpura.com
web: www.zenithpura.com

BFC 袋滤器

1．材质 SUS304, SUS316L;
2．最大工作压力 300 Psi;
3．亚光处理。





BFC-Bag Filter Housing

Material: SUS304, SUS316L;
Max working pressure 300 Psi;
Sandblast external surface.

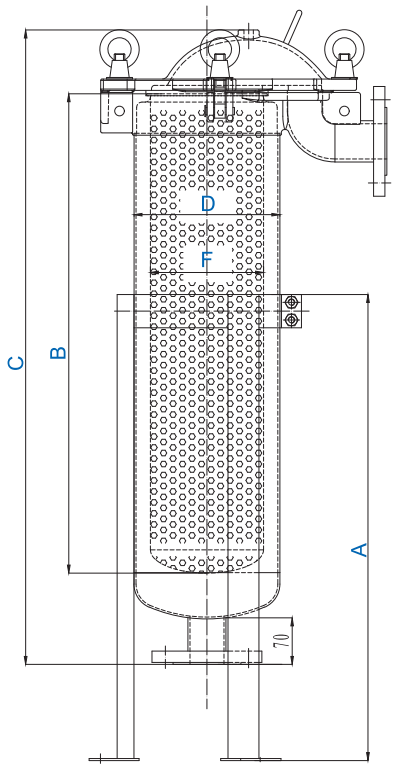

Standard specifications

Model	A (mm)	B (mm)	C (mm)	D (mm)	F (mm)	In/Out
BFC-1	500	380	620	Φ219	Φ170	2 "
BFC-2	700	720	960	Φ219	Φ170	2 "
BFC-3	350	210	365	Φ114	Φ97	1 "
BFC-4	500	340	485	Φ114	Φ97	1 "

地址: 江苏省苏州市相城区元和街道宣公路588号元和塘科技文化研发社区1号楼5楼550室
ADD: Room 550, 5th Floor, Building 1,Yuanhetang Science and Technology Culture R&D Community,
No. 588 Xuangong Road, Yuanhe Street, Xiangcheng District, Suzhou City, Jiangsu Province.
TEL: +86 13913135613 / 18068082730
E-mail: sunny@zenithpura.com / Wendy@zenithpura.com
web: www.zenithpura.com



BFM 袋滤器

1．材质 SUS304, SUS316L;
2．最大工作压力 150 Psi;
3．表面抛光处理或亚光处理。

BFM-Bag Filter Housing

Material: SUS304, SUS316L;
Max working pressure 150 Psi;
Polished or sandblast external surface.

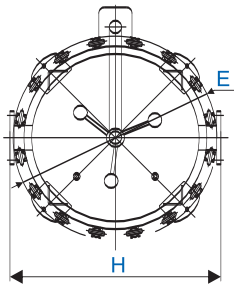

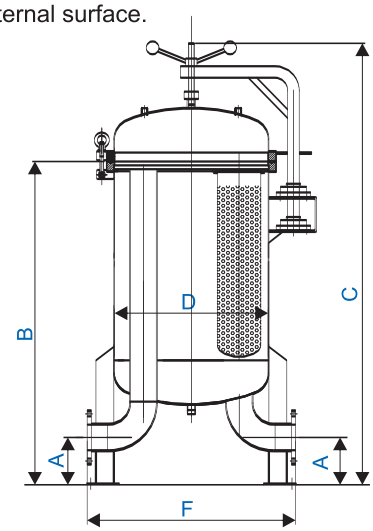

Standard specifications

Model	A (mm)	B (mm)	C (mm)	D (mm)	H (mm)	In/Out	Flowrate m^3/h	NO.Bags
BFM-450-2F	150	1100	1430	Φ450	590	3 "	60	2
BFM-500-3F	150	1190	1540	Φ500	640	4 "	90	3
BFM-550-4F	150	1200	1560	Φ550	690	4 "	120	4
BFM-600-4F	150	1250	1630	Φ600	760	5 "	120	4
BFM-600-5F	150	1250	1630	Φ600	760	5 "	150	5
BFM-650-5F	180	1350	1740	Φ650	830	6 "	150	5
BFM-700-6F	200	1380	1780	Φ700	860	6 "	180	6
BFM-800-8F	200	1460	1920	Φ800	980	8 "	240	8
BFM-850-9F	200	1470	1950	Φ850	1030	8 "	270	9
BFM-900-10F	250	1550	2050	Φ900	1100	8 "	300	10
BFM-1000-12F	250	1570	2100	Φ1000	1200	8 "	360	12
BFM-1100-16F	250	1600	2150	Φ1100	1400	8 "	480	16
BFM-1200-18F	300	1780	2350	Φ1200	1500	10 "	540	18

地址: 江苏省苏州市相城区元和街道宣公路588号元和塘科技文化研发社区1号楼5楼550室
ADD: Room 550, 5th Floor, Building 1,Yuanhetang Science and Technology Culture R&D Community,
No. 588 Xuangong Road, Yuanhe Street, Xiangcheng District, Suzhou City, Jiangsu Province.
TEL: +86 13913135613 / 18068082730
E-mail: sunny@zenithpura.com / Wendy@zenithpura.com
web: www.zenithpura.com



篮式过滤器

1. 材质 SUS304,SUS316L;
2. 最大工作压力 150Psi;
3. 表面抛光处理或亚光处理。

Basket filter

Material: SUS304, SUS316L;
Max working pressure 150 Psi;
Polished or sandblast external surface .

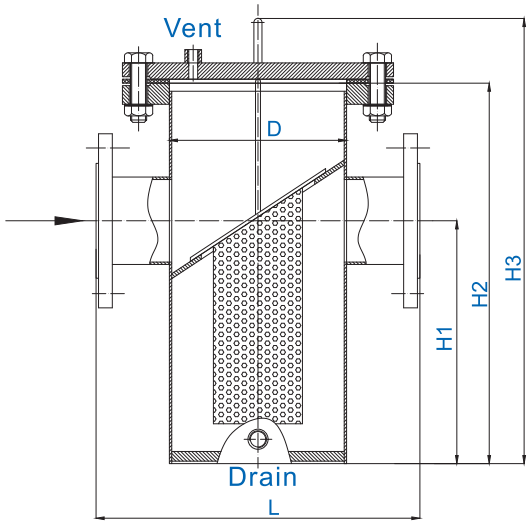

Standard specifications

Model	D (mm)	L (mm)	H1 (mm)	H2 (mm)	H3 (mm)	Vent	Drain	Flowrate m^3/h
DN25	Φ114	280	160	260	340	¼"	½"	6
DN32	Φ114	280	165	270	350	¼"	½"	8
DN40	Φ114	280	180	300	380	¼"	½"	11
DN50	Φ114	280	180	300	380	¼"	½"	18
DN65	Φ133	330	220	350	430	¼"	½"	32
DN80	Φ159	340	260	400	480	½"	¾"	44
DN100	Φ219	420	310	470	550	½"	¾"	65
DN125	Φ273	500	430	620	700	½"	¾"	100
DN150	Φ273	500	430	620	700	½"	¾"	142
DN200	Φ325	560	530	780	860	½"	1"	270
DN250	Φ426	660	640	930	1010	½"	1"	420
DN300	Φ478	750	840	1200	1280	½"	1"	592

地址: 江苏省苏州市相城区元和街道宣公路588号元和塘科技文化研发社区1号楼5楼550室
ADD: Room 550, 5th Floor, Building 1,Yuanhetang Science and Technology Culture R&D Community,
No. 588 Xuangong Road, Yuanhe Street, Xiangcheng District, Suzhou City, Jiangsu Province.
TEL: +86 13913135613 / 18068082730
E-mail: sunny@zenithpura.com / Wendy@zenithpura.com
web: www.zenithpura.com



机械过滤器

1．材质 SUS304, SUS316L; Q235;
2. 最大设计工作压力 100 Psi;
3. 表面抛光处理或亚光处理。

Mechanical Filter

(Sand Filter & Active Carbon Filter)

Material: SUS304, SUS316L, Q235;
Max design working pressure 100 Psi;
Polished or sandblast external surface.

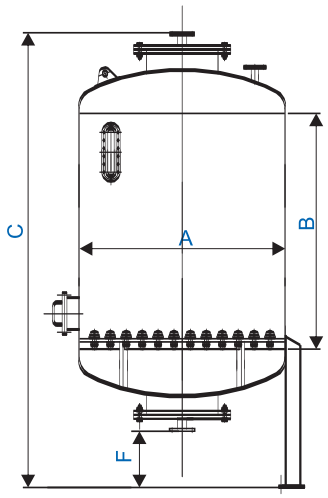

Standard specifications

Model	A (mm)	B (mm)	C (mm)	F (mm)	In/Out	Vent
300X1200	ϕ300	1200	1800	300	1 "	3/4 "
400X1500	ϕ400	1500	2150	300	1 "	3/4 "
500X1500	ϕ500	1500	2230	300	1-1/4 "	1 "
600X1500	ϕ600	1500	2290	300	1-1/4 "	1 "
700X1500	ϕ700	1500	2340	300	1-1/2 "	1 "
800X1500	ϕ800	1500	2390	300	1-1/2 "	1 "
900X1500	ϕ900	1500	2600	300	1-1/2 "	1 "
1000X1500	ϕ1000	1500	2750	400	1-1/2 "	1 "
1100X1500	ϕ1100	1500	2800	400	2 "	1-1/4 "
1200X1500	ϕ1200	1500	2850	400	2 "	1-1/4 "
1400X1500	ϕ1400	1500	2950	400	2 "	1-1/4 "
1500X1800	ϕ1500	1800	3360	400	2 "	1-1/4 "
1600X1800	ϕ1600	1800	3500	400	2-1/2 "	1-1/2 "
1800X1800	ϕ1800	1800	3610	400	2-1/2 "	1-1/2 "
2000X1800	ϕ2000	1800	3710	400	3 "	1-1/2 "
2200X1800	ϕ2200	1800	3810	400	3 "	1-1/2 "
2500X2000	ϕ2500	2000	3860	400	3 "	1-1/2 "

地址: 江苏省苏州市相城区元和街道宣公路588号元和塘科技文化研发社区1号楼5楼550室
ADD: Room 550, 5th Floor, Building 1,Yuanhetang Science and Technology Culture R&D Community,
No. 588 Xuangong Road, Yuanhe Street, Xiangcheng District, Suzhou City, Jiangsu Province.
TEL: +86 13913135613 / 18068082730
E-mail: sunny@zenithpura.com / Wendy@zenithpura.com
web: www.zenithpura.com



离子交换器

1．材质 SUS304, SUS316L;Q235;
2．最大工作压力 100 Psi；
3．表面抛光处理或亚光处理。

Lon Exchanger

Material: SUS304, SUS316L; Q235;
Max working pressure 100 Psi;
Polished or sandblast external surface.

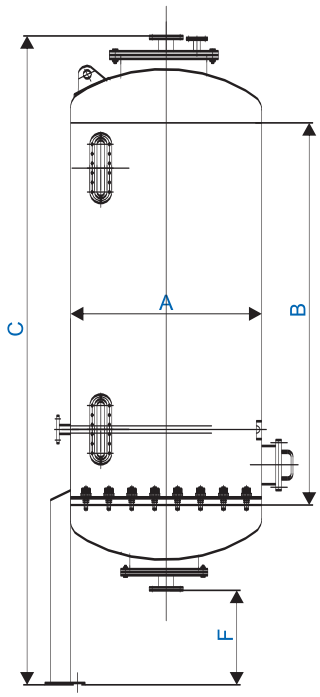

Standard specifications

Model	A (mm)	B (mm)	C (mm)	F (mm)	In/Out	Vent
300X2000	Φ300	2000	2640	300	1 "	3/4 "
400X2000	Φ400	2000	2690	300	1 "	3/4 "
500X2000	Φ500	2000	2760	300	1-1/4 "	1 "
600X2000	Φ600	2000	3100	300	1-1/4 "	1 "
700X2000	Φ700	2000	3150	300	1-1/2 "	1 "
800X2000	Φ800	2000	3210	300	1-1/2 "	1 "
900X2000	Φ900	2000	3310	300	1-1/2 "	1 "
1000X2000	Φ1000	2000	3410	400	1-1/2 "	1 "
1100X2000	Φ1100	2000	3460	400	2 "	1-1/4 "
1200X2000	Φ1200	2000	3510	400	2 "	1-1/4 "
1400X2000	Φ1400	2000	3610	400	2 "	1-1/4 "
1500X2000	Φ1500	2000	3660	400	2 "	1-1/4 "

地址: 江苏省苏州市相城区元和街道宣公路588号元和塘科技文化研发社区1号楼5楼550室
ADD: Room 550, 5th Floor, Building 1,Yuanhetang Science and Technology Culture R&D Community,
No. 588 Xuangong Road, Yuanhe Street, Xiangcheng District, Suzhou City, Jiangsu Province.
TEL: +86 13913135613 / 18068082730
E-mail: sunny@zenithpura.com / Wendy@zenithpura.com
web: www.zenithpura.com



软化罐

1．材质 SUS304, SUS316L;
2．最大工作压力 100 Psi;
3．表面抛光处理或亚光处理。

Softening Vessel

Material: SUS304, SUS316L;
Max working pressure 100 Psi;
Polished or sandblast external surface .

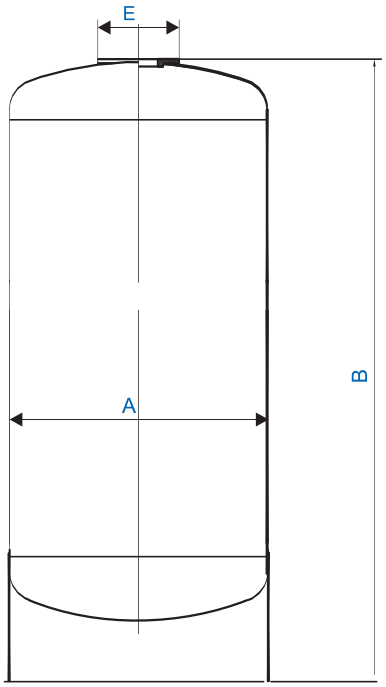

Standard specifications

Model	A	B	E
1052	Φ250	1320	2-1/2 "
1252	Φ300	1320	2-1/2 "
1465	Φ350	1650	2-1/2 "
1665	Φ400	1650	2-1/2 "
2065	Φ500	1650	4 "

地址: 江苏省苏州市相城区元和街道宣公路588号元和塘科技文化研发社区1号楼5楼550室
ADD: Room 550, 5th Floor, Building 1,Yuanhetang Science and Technology Culture R&D Community,
No. 588 Xuangong Road, Yuanhe Street, Xiangcheng District, Suzhou City, Jiangsu Province.
TEL: +86 13913135613 / 18068082730
E-mail: sunny@zenithpura.com / Wendy@zenithpura.com
web: www.zenithpura.com



软化罐带腿

1．材质 SUS304, SUS316L;
2．最大工作压力 100 Psi;
3．表面抛光处理或亚光处理。

Softening Vessel with legs

Material: SUS304, SUS316L;
Max working pressure 100 Psi;
Polished or sandblast external surface .

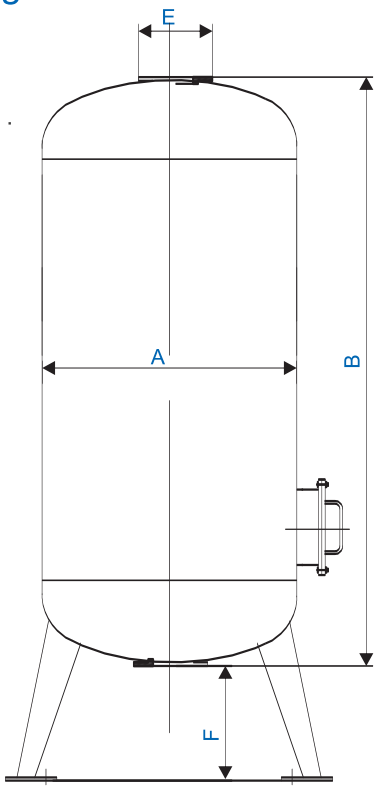

Standard specifications

Model	A	B	F	E
2265	Φ550	1650	250	4 "
2472	Φ600	1850	300	4 "
3072	Φ750	1850	300	4 "
3272	Φ800	1850	300	4 "
3672	Φ900	1850	300	4 "
4272	Φ1000	1850	300	4 "
4872	Φ1200	1850	350	4 "

地址: 江苏省苏州市相城区元和街道宣公路588号元和塘科技文化研发社区1号楼5楼550室
ADD: Room 550, 5th Floor, Building 1,Yuanhetang Science and Technology Culture R&D Community,
No. 588 Xuangong Road, Yuanhe Street, Xiangcheng District, Suzhou City, Jiangsu Province.
TEL: +86 13913135613 / 18068082730
E-mail: sunny@zenithpura.com / Wendy@zenithpura.com
web: www.zenithpura.com

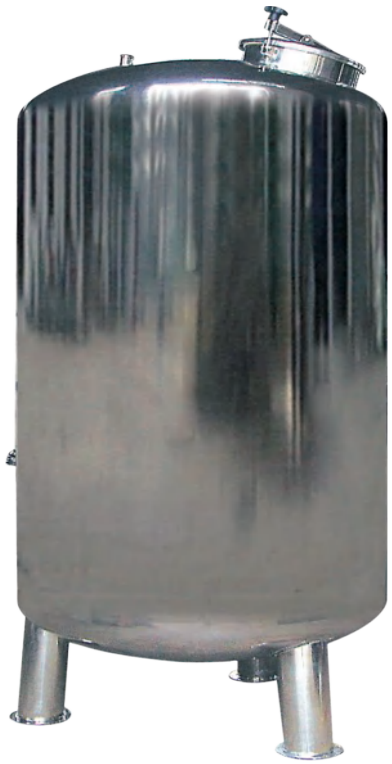

水箱

1．材质 SUS304, SUS316L;
2．最大工作压力 100 Psi;
3．亚光处理。

Water Tank (Round Cap)

Material: SUS304, SUS316L;
Max working pressure 100 Psi;
Sandblast external surface.

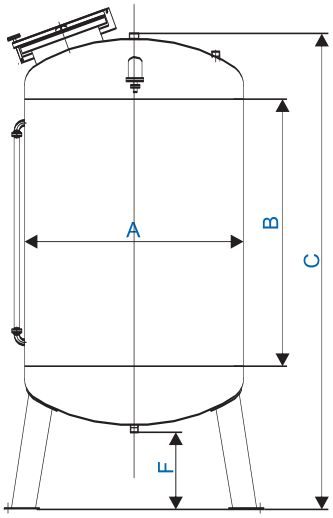

Standard specifications

Model	A (mm)	B (mm)	C (mm)	F (mm)	In/Out	Vent
0.3M^3	Φ550	1220	1830	250	3/4 "	3/4 "
0.5M^3	Φ700	1220	1910	250	3/4 "	3/4 "
1M^3	Φ1000	1220	2110	300	1 "	3/4 "
2M^3	Φ1300	1500	2540	300	1 "	3/4 "
3M^3	Φ1600	1500	2690	300	1-1/2 "	3/4 "
4M^3	Φ1600	2000	3190	300	1-1/2 "	3/4 "
5M^3	Φ1800	2000	3290	300	1-1/2 "	3/4 "
6M^3	Φ1900	2000	3390	350	1-1/2 "	3/4 "
8M^3	Φ2000	2500	3940	350	2 "	3/4 "
10M^3	Φ2200	2400	3940	350	2 "	3/4 "

地址: 江苏省苏州市相城区元和街道宣公路588号元和塘科技文化研发社区1号楼5楼550室
ADD: Room 550, 5th Floor, Building 1,Yuanhetang Science and Technology Culture R&D Community,
No. 588 Xuangong Road, Yuanhe Street, Xiangcheng District, Suzhou City, Jiangsu Province.
TEL: +86 13913135613 / 18068082730
E-mail: sunny@zenithpura.com / Wendy@zenithpura.com
web: www.zenithpura.com

Heat exchanger 热交换器



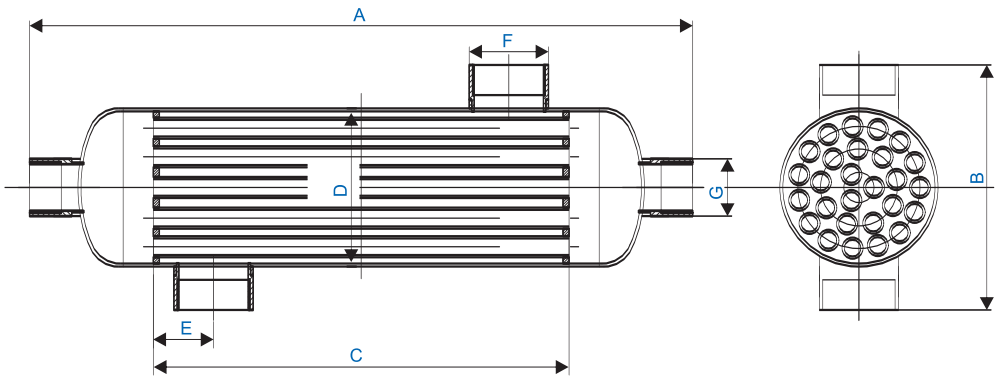

Standard specifications

Model	A	B	C	D	E	F	Drain
BN-HE-45	302	149	151	ϕ89	38	1 "	3/4 "
BN-HE-70	403	149	249	ϕ89	38	1 "	3/4 "
BN-HE-130	490	149	300	ϕ89	38	1-1/2 "	3/4 "
BN-HE-180	442	165	276	ϕ105	40	1-1/2 "	1 "
BN-HE-250	571	165	405	ϕ105	40	1-1/2 "	1 "
BN-HE-300	700	165	534	ϕ105	40	1-1/2 "	1 "
BN-HE-500	1166	165	1000	ϕ105	57	2 "	1 "
BN-HE-1000	968	204	764	ϕ133	57	2 "	2 "

地址: 江苏省苏州市相城区元和街道宣公路588号元和塘科技文化研发社区1号楼5楼550室
ADD: Room 550, 5th Floor, Building 1,Yuanhetang Science and Technology Culture R&D Community,
No. 588 Xuangong Road, Yuanhe Street, Xiangcheng District, Suzhou City, Jiangsu Province.
TEL: +86 13913135613 / 18068082730
E-mail: sunny@zenithpura.com / Wendy@zenithpura.com
web: www.zenithpura.com



Coupling 卡套

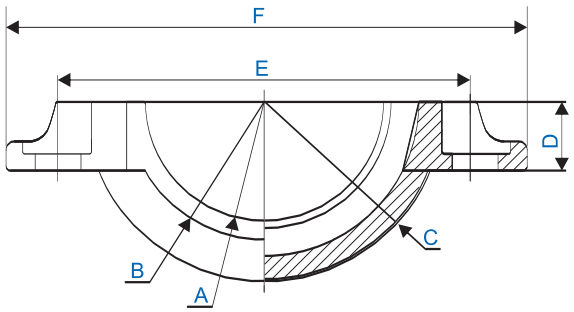

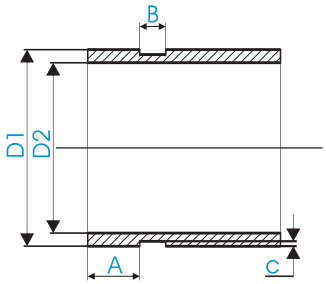



Standard specifications

Size	D1	D2	A	B	C
3/4 "	Φ26.7	Φ20.96	15.88	7.95	1.42
1 "	Φ33.4	Φ26.64	15.88	7.95	1.60
1-1/4 "	Φ42.2	Φ35.08	15.88	7.95	1.60
1-1/2 "	Φ48.3	Φ40.94	15.88	7.95	1.60
2 "	Φ60.3	Φ52.48	15.88	7.95	1.60
2-1/2 "	Φ73.0	Φ63.44	15.88	7.95	1.98
3 "	Φ88.9	Φ79.34	15.88	7.95	1.98
4 "	Φ114.3	Φ103.98	15.88	9.53	2.11
5 "	Φ141.3	Φ130.98	15.88	9.53	2.13
6 "	Φ168.3	Φ157.18	15.88	9.53	2.16
8 "	Φ219.1	Φ207.00	19.05	11.13	2.34

Standard specifications

Size	A	B	C	D	E	F	G
3/4 "	Φ24.3	Φ33.7	Φ51.7	16	64.7	89.3	44
1 "	Φ30.7	Φ40.1	Φ58.1	16	71.1	96.1	45
1-1/4 "	Φ39.5	Φ48.9	Φ66.9	16	79.9	104.9	45
1-1/2 "	Φ45.5	Φ54.9	Φ72.9	16	85.9	110.9	45
2 "	Φ57.6	Φ67.0	Φ85.0	16	98.0	123.0	46
2-1/2 "	Φ70.0	Φ78.0	Φ98.0	20	112.0	137.0	48
3 "	Φ85.4	Φ95.0	Φ115.4	20	134.0	163.0	48
4 "	Φ110.4	Φ120.0	Φ143.4	24	160.0	189.0	48
5 "	Φ137.4	Φ148.4	Φ170.44	26	186.0	219.0	48
6 "	Φ164.4	Φ174.4	Φ197.4	28	219.0	254.0	48

地址: 江苏省苏州市相城区元和街道宣公路588号元和塘科技文化研发社区1号楼5楼550室
ADD: Room 550, 5th Floor, Building 1,Yuanhetang Science and Technology Culture R&D Community,
No. 588 Xuangong Road, Yuanhe Street, Xiangcheng District, Suzhou City, Jiangsu Province.
TEL: +86 13913135613 / 18068082730
E-mail: sunny@zenithpura.com / Wendy@zenithpura.com
web: www.zenithpura.com

Tri-clover 精装卡箍

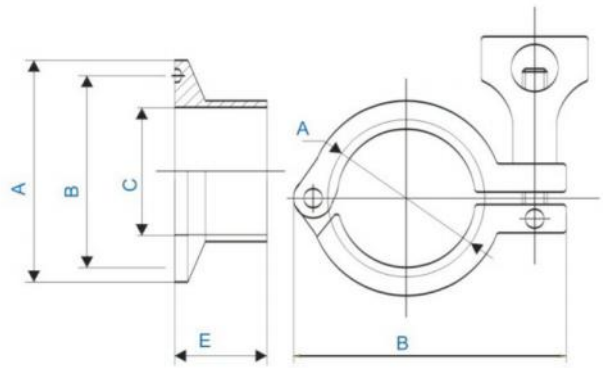



Standard specifications

Size	ϕ	A	B	C	E
3/4 "	19.05	50.5	43.5	16.5	21.0
1 "	25.4	50.5	43.5	22.4	21.0
1-1/4 "	31.8	50.5	43.5	28.8	21.0
1-1/2 "	38.1	50.5	43.5	35.1	21.0
2 "	50.8	64.0	56.5	47.8	21.0
2-1/2 "	63.5	77.5	70.5	59.5	21.0
3 "	76.2	91.0	83.5	72.3	21.0
3-1/2 "	88.9	106.0	97.0	85.1	21.0
4 "	101.6	119.0	110.0	97.6	21.0

Standard specifications

Size	ϕ	A	B
1 " -1 1/2 "	19-38	53.5	44.5
2 "	50.8	66.5	57.5
2-1/2 "	63.5	81.0	72.0
3 "	76.2	94.0	85.0
3-1/2 "	89.1	108.0	102.0
4 "	101.6	122.0	113.0

Accessories 配件





地址: 江苏省苏州市相城区元和街道宣公路588号元和塘科技文化研发社区1号楼5楼550室
ADD: Room 550, 5th Floor, Building 1,Yuanhetang Science and Technology Culture R&D Community,
No. 588 Xuangong Road, Yuanhe Street, Xiangcheng District, Suzhou City, Jiangsu Province.
TEL: +86 13913135613 / 18068082730
E-mail: sunny@zenithpura.com / Wendy@zenithpura.com
web: www.zenithpura.com

Contact Us

+86 13913135613 / 18068082730

江苏省苏州市相城区元和街道宣公路588号元和塘科技文化研发社区1号楼5楼550室
Room 550, 5th Floor, Building 1, Yuanhetang Science and Technology Culture R&D Community, No. 588 Xuangong Road, Yuanhe Street, Xiangcheng District, Suzhou City, Jiangsu Province

sunny@zenithpura.com / Wendy@zenithpura.com