ZenithPura

苏州新鼎汇环保科技有限公司

SUZHOU XINDINGHUI ENVIRONMENTAL PROTECTION TECHNOLOGY CO., LTD.

地址：江苏省苏州市相城区元和街道宣公路588号元和塘科技文化研发社区1号楼5楼550室

ADD: Room 550, 5th Floor, Building 1, Yuanhetang Science and Technology Culture R&D Community, No. 588 Xuangong Road, Yuanhe Street, Xiangcheng District, Suzhou City, Jiangsu Province

TEL: +86 13913135613　E-mail：sunny@zenithpura.com　www.zenithpura.com

Stainless Steel Filter Series

OB Series



A B C D

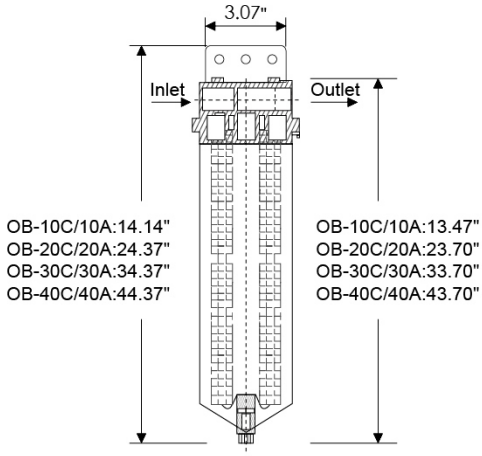

A:1/4" NPT drain valve (排污阀)
B:Flat bottom (平底)
C:1/4"NPT drain plug (排污堵头)
D:1/2"BSP drain (排污)

- BRASS CAP+SUS 304 BOWL
- Availabe for 1/2" or 3/4" NPT/BSP connections;
  Accept 2.5" dia×10",20",30",40" length DOE Cartridge

- 铜头 +304 筒体
- 1/2" 或 3/4" 口径进出水；适用于直径 63.5mm 以内的 10" 或 20" 或 30" 或 40" 双开口滤芯

Stainless Steel Filter Series

OL Series



A B C D

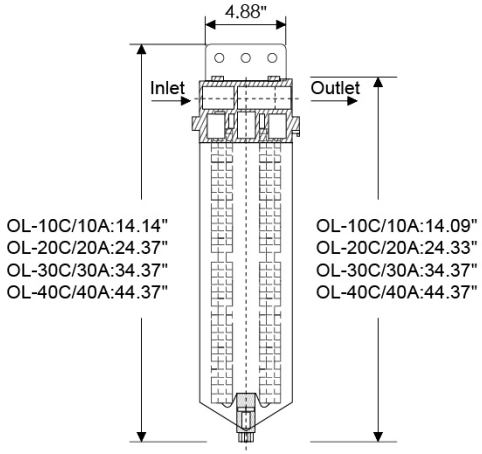

A:1/4" NPT drain valve (排污阀)
B:Flat bottom (平底)
C:1/4"NPT drain plug (排污堵头)
D:1/2"BSP drain (排污)

- SUS304 CAP+SUS 304 BOWL(SUS316 Available)
- Availabe for 1" NPT/BSP connections;
  Accept 2.5" dia×10",20",30",40" length DOE Cartridge

- 304 钢头 +304 筒体
- 1" 口径进出水；适用于直径 63.5mm 以内的 10" 或 20" 或 30" 或 40" 双开口滤芯

Stainless Steel Filter Series

OM Series



A B C D

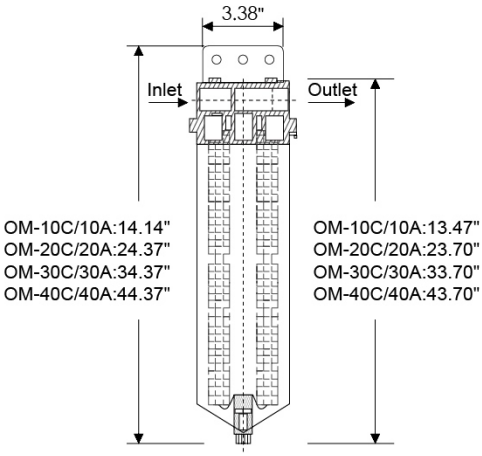

- SUS304 CAP+SUS 304 BOWL(SUS316 Available)
- Availabe for 1/2" or 3/4" NPT/BSP connections; Accept 2.5" dia×10",20",30",40" length DOE Cartridge

A:1/4" NPT drain valve (排污阀)
B:Flat bottom (平底)
C:1/4"NPT drain plug (排污堵头)
D:1/2"BSP drain (排污)

- 304 钢头 +304 筒体
- 1/2" 或 3/4" 口径进出水；适用于直径 63.5mm 以内的 10" 或 20" 或 30" 或 40" 双开口滤芯

Stainless Steel Filter Series

ON Series



A B C D

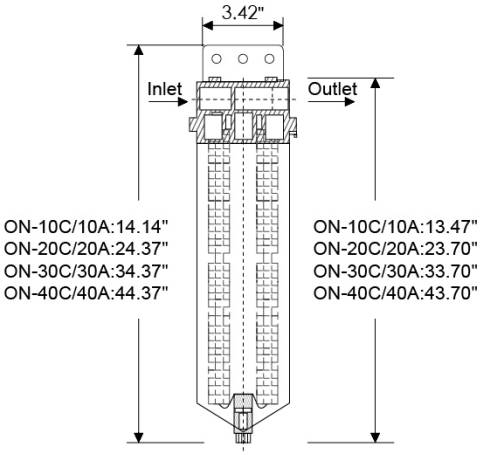

- SUS304 CAP+SUS 304 BOWL(SUS316 Available)
- Availabe for 1/2" or 3/4"or 1" NPT/BSP connections; Accept 2.5" dia×10",20",30",40" length DOE Cartridge

A:1/4" NPT drain valve (排污阀)
B:Flat bottom (平底)
C:1/4"NPT drain plug (排污堵头)
D:1/2"BSP drain (排污)

- 304 钢头 +304 筒体
- 1/2" 或 3/4" 或 1" 口径进出水；适用于直径 63.5mm 以内的 10" 或 20" 或 30" 或 40" 双开口滤芯

Stainless Steel Filter Series

OP Series



A B C D

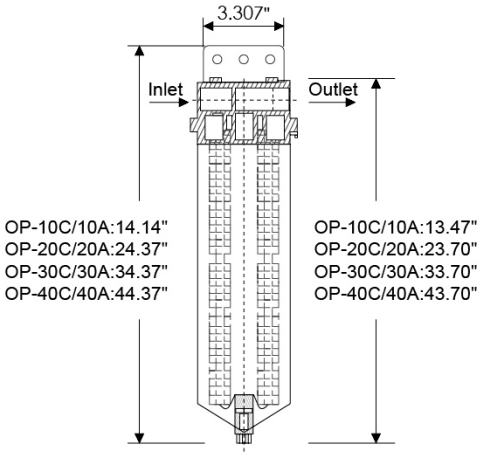

A:1/4" NPT drain valve (排污阀)
B:Flat bottom (平底)
C:1/4"NPT drain plug (排污堵头)
D:1/2"BSP drain (排污)

- SUS304 CAP+SUS 304 BOWL(SUS316 Available)
- Availabe for 3/4" or 1"NPT/BSP connections; Accept 2.5" dia×10",20",30",40" length DOE Cartridge

- 304 钢头 +304 筒体
- 3/4" 或 1" 口径进出水；适用于直径 63.5mm 以内的 10" 或 20" 或 30" 或 40" 双开口滤芯

Stainless Steel Filter Series

OS Series



A B C D

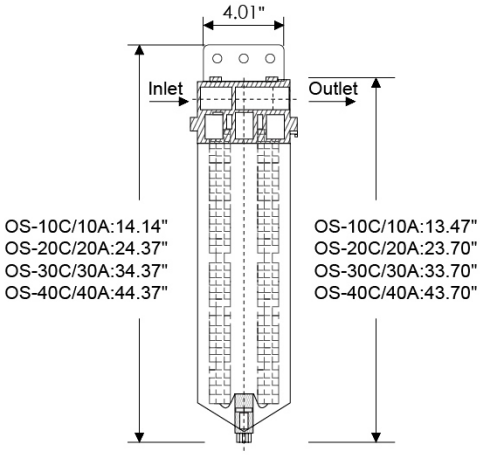

A:1/4" NPT drain valve (排污阀)
B:Flat bottom (平底)
C:1/4"NPT drain plug (排污堵头)
D:1/2"BSP drain (排污)

- SUS304 CAP+SUS 304 BOWL(SUS316 Available)
- Availabe for 1" or 3/4" NPT/BSP connections; Accept 2.5" dia×10",20",30",40" length DOE Cartridge

- 304 钢头 +304 筒体
- 1" 或 3/4" 口径进出水；适用于直径 63.5mm 以内的 10" 或 20" 或 30" 或 40" 双开口滤芯

Stainless Steel Filter Series

OR Series



A B C D

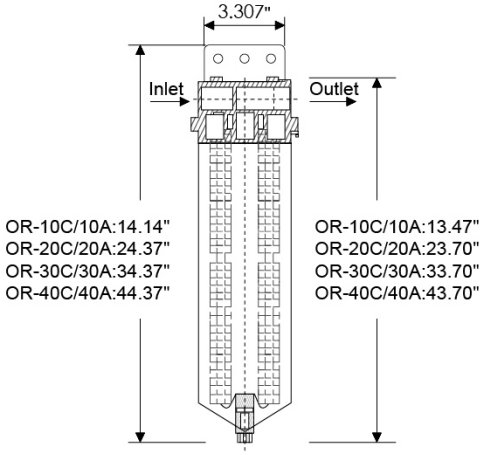

A:1/4" NPT drain valve (排污阀)
B:Flat bottom (平底)
C:1/4"NPT drain plug (排污堵头)
D:1/2"BSP drain (排污)

- SUS304 CAP+SUS 304 BOWL(SUS316 Available)
- Availabe for 3/4" NPT/BSP connections;
  Accept 2.5" dia×10",20",30",40" length DOE Cartridge

- 304 钢头 +304 筒体
- 3/4" 口径进出水；适用于直径 63.5mm 以内的 10" 或 20" 或 30" 或 40" 双开口滤芯

Stainless Steel Filter Series

OMG Series



A B C D

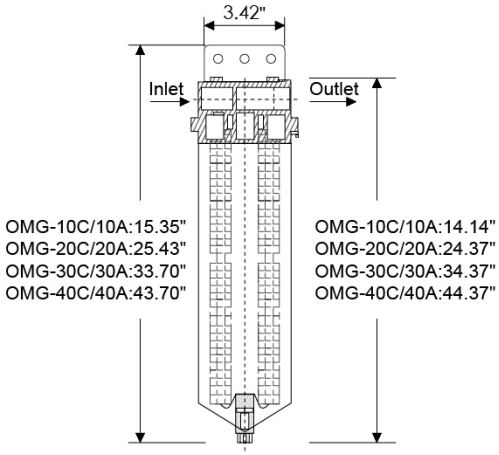

A:1/4" NPT drain valve (排污阀)
B:Flat bottom (平底)
C:1/4"NPT drain plug (排污堵头)
D:1/2"BSP drain (排污)

- SUS304 CAP+SUS 304 BOWL(SUS316 Available)
- Availabe for 1" NPT/BSP connections;
  Accept 4.33" dia×10",20",30",40" length DOE Cartridge

- 304 钢头 +304 筒体
- 1" 口径进出水；适用于直径 110mm 以内的 10" 或 20" 或 30" 或 40" 双开口滤芯

Stainless Steel Filter Series

OMG-1½ Series



A B C D

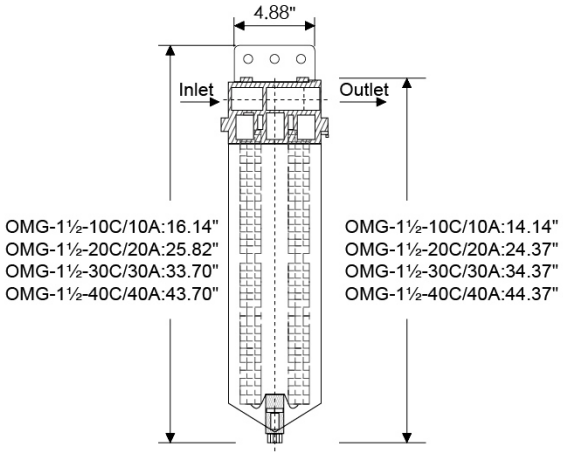

- SUS304 CAP+SUS 304 BOWL(SUS316 Available)
- Availabe for 1-1/2" NPT/BSP connections;
  Accept 4.33" dia×10",20",30",40" length DOE Cartridge

A:1/4" NPT drain valve (排污阀)
B:Flat bottom (平底)
C:1/4"NPT drain plug (排污堵头)
D:1/2"BSP drain (排污)

- 304 钢头 +304 筒体
- 1-1/2" 口径进出水；适用于直径 110mm 以内的 10" 或 20" 或 30" 或 40" 双开口滤芯

Stainless Steel Filter Series

OML-1 Series



A B C D

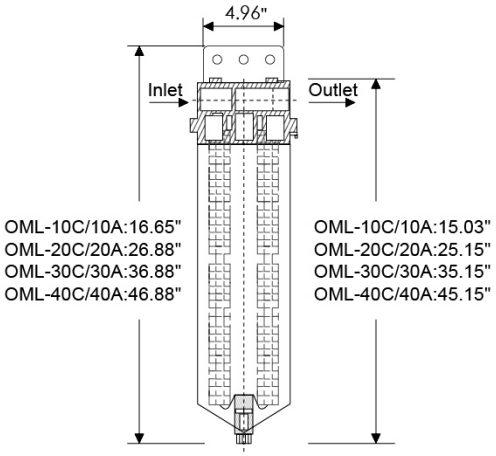

- SUS304 CAP+SUS 304 BOWL(SUS316 Available)
- Availabe for 1" NPT/BSP connections;
  Accept 4.33" dia×10",20",30",40" length DOE Cartridge

A:1/4" NPT drain valve (排污阀)
B:Flat bottom (平底)
C:1/4"NPT drain plug (排污堵头)
D:1/2"BSP drain (排污)

- 304 钢头 +304 筒体
- 1" 口径进出水；适用于直径 110mm 以内的 10" 或 20" 或 30" 或 40" 双开口滤芯

Stainless Steel Filter Series

OZ Series



A B C D

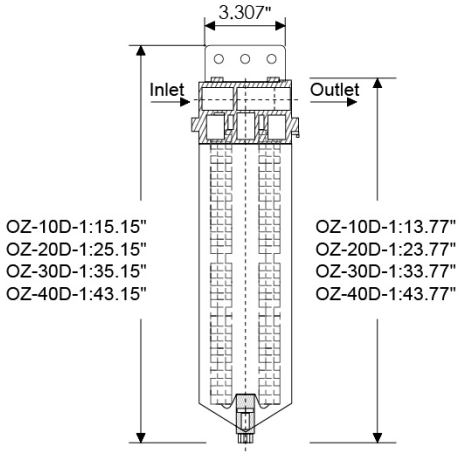

- SUS304 CAP+SUS 304 BOWL(SUS316 Available)
- Availabe for 3/4" or 1"NPT/BSP connections;
  Accept 2.5" dia×10",20",30",40" length DOE Cartridge

A:1/4" NPT drain valve (排污阀)
B:Flat bottom (平底)
C:1/4"NPT drain plug (排污堵头)
D:1/2"BSP drain (排污)

- 304 钢头 +304 筒体
- 3/4" 或 1" 口径进出水；适用于直径 63.5mm 以内的 10" 或 20" 或 30" 或 40" 双开口滤芯

- BRASS CAP+SUS 304 BOWL
- Availabe for 1/4 NPT/BSP connections;
  Accept 2" dia length DOE Cartridge



OBJ-OH
台面净水器
Water purifier



OBJ-OF
台面净水器
Water purifier



OBJ-OI
台底净水器
Water purifier



OBJ-OJ
双功能净水器
Water purifier



Ø57-10" 芯



OBJ-OD
台面净水器
Water purifier



净水龙头
Pure tap