ZenithPura

苏州新鼎汇环保科技有限公司

SUZHOU XINDINGHUI ENVIRONMENTAL PROTECTION TECHNOLOGY CO., LTD.

地址：江苏省苏州市相城区元和街道宣公路588号元和塘科技文化研发社区1号楼5楼550室

ADD: Room 550, 5th Floor, Building 1, Yuanhetang Science and Technology Culture R&D Community, No. 588 Xuangong Road, Yuanhe Street, Xiangcheng District, Suzhou City, Jiangsu Province

TEL: +86 13913135613　E-mail：sunny@zenithpura.com　www.zenithpura.com

Table of Standards for PVC-U Pipes and Fittings

PVC-U 管材管件执行标准一览表

种类 Type	执行标准 Executive Standards
PVC-U 工业管件 (国标) (DIN) PVC-U Fittings For Industrial Applications	GB/T 4219.2-2015
PVC-U 牙口式美标管件 (ASTM) Threaded Type PVC-U Fittings	ASTM D2464
PVC-U 承插式美标管件 (ASTM) Socket Type PVC-U Fittings	ASTM D2467
PVC-U 工业管材（国标） (DIN) PVC-U Pipes For Industrial Applications	GB/T 4219.1-2008
PVC-U 美标 管材 (ASTM) PVC-U Pipes	ASTM D 1785

Standards of PVC-U Material Testing

PVC-U 材料试验标准

指标名称 Item	单位 Unit	指标 Approval Standard	试验方法 Test method
密度 Density	kg/m³	1330-1460	CB/T 1033.1-2008 方法 A：浸渍法 CB/T 1033.1-2008 Method A: impregnation method;
维卡软化温度 Vicat Softening Temperature	°C	≥80	GB/T 8802
维卡软化温度（管件） Vika softening temperature (pipe fittings)	°C	≥74	GB/T 8802
烘箱试验 Oven test	/	无分层、无开裂 No layering, no cracking	GB/T 8803
纵向回缩率 Longitudinal Reversion	%	≤5	GB/T 6671-2001 方法 B：烘箱试验 GB/T 6671-2001 Method B: oven test
二氯甲烷浸渍试验 Dichloromethane leaching test	/	试样表面无破坏 No damage to the sample surface	GB/T 13526
液压强度试验 Hydraulic strength test	/	无破裂、无渗漏 No crack, no leakage	GB/T 6111
坠落试验 Falling test	/	无破裂、无渗漏 No crack, no leakage	GB/T 8801
落锤冲击性能 Drop weight impact performance	/	TIR<5%	CB/T 14152
悬臂梁冲击强度 Impact strength of cantilever beam	J/m	≥34.7	ASTM D256
拉伸强度 Tensile strength	Mpa	≥48.3	ASTM D638
拉伸模量 Tensile modulus	Mpa	≥2758	ASTM D638
线膨胀系数 Line expansion coefficient	M/M/°C	$7*10^{-5}$	GB/T 1036

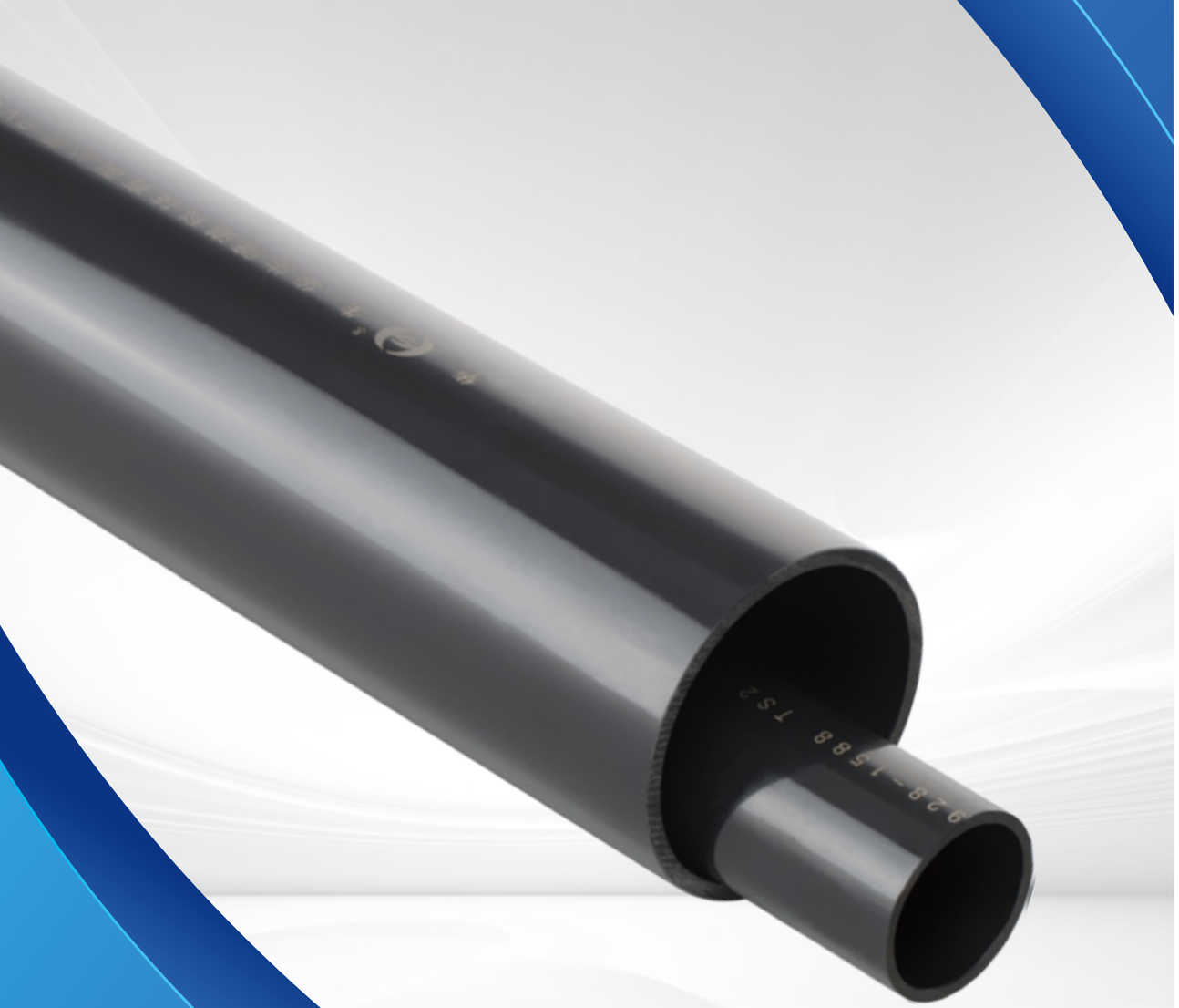

管材 PIPE

SERIES AND SIZE OF PVC-U PIPE FOR ENVIRONMENTAL WATER TREATMNT

环保水处理 PVC-U 管材系列和规格尺寸

管材介绍 PIPE INTRODUCTION

管材特点 Features

1. 物化性能优良。用 PVC-U 生产的管材，耐腐蚀，抗冲强度高，流体阻力小（较同口径铸铁管流量提高 30%）。
1. Excellent physical and chemical properties. Pipes made of PVC-U have corrosion resistance, high impact strength, and low fluid resistance (30% higher flow than cast iron pipes of the same diameter).

2. 耐老化，使用寿命长（据权威机构测试资料说明，使用年限为 50 年），是工业用流体输送的理想材料。
2. Aging resistance and long service life (according to the test data of authoritative institutions, the service life is up to 50 years), it is an ideal material for industrial fluid transportation.

3. 质轻实用，安装方便。重量低于同口径铸铁管 20%，可大大加快工程进度和降低施工费用。
3. Lightweight and practical, easy to install. The weight is 20% lower than the cast iron pipe of the same diameter, which can greatly speed up the project progress and reduce the construction cost.

4. 内壁光滑，排水流畅，管道不易堵塞。检查口设计独特，检查操作方便，不需要任何工具。
4. Smooth inner wall for smooth drainage and less clogging. Unique inspection port design makes inspection easy and without any tools.

5. 节约施工费用。使用 PVC-U 管比使用同样规格的铸铁管的综合造价低，维修费用低。
5. Save on construction costs. The overall cost of using PVC-U pipe is lower than that of cast iron pipe of the same specification, and the maintenance cost is lower.

产品参数 SPECIFICATIONS

GB/T 4219.1-2008 单位：毫米 unit:mm

公称外径 DE Outside Diameter DE(mm)	外形尺寸 Dimensions（mm）			
	S10/SDR21		S12.5 / SDR26	
	e_{min}	公差 Tolerance	e_{min}	公差 Tolerance
16	-	-	-	-
20	2.0	+0.4	-	-
25	2.0	+0.4	-	-
32	2.0	+0.4	-	-
40	2.0	+0.4	-	-
50	2.4	+0.5	-	-
63	3.0	+0.5	-	-
75	3.6	+0.6	-	-
90	4.3	+0.7	-	-
110	5.3	+0.8	4.2	+0.7
125	6.0	+0.8	4.8	+0.7
140	6.7	+0.9	5.4	+0.8
160	7.7	+1.0	6.2	+0.9
180	8.6	+1.1	6.9	+0.9
200	9.6	+1.2	7.7	+1.0
225	10.8	+1.3	8.6	+1.1
250	11.9	+1.4	9.6	+1.2
280	13.4	+1.6	10.7	+1.3
315	15.0	+1.7	12.1	+1.5
355	10.9	+1.7	13.6	+2.1
400	12.3	+1.9	15.3	+2.3



管件 PIPE FITTING

ELBOW 45°

45°弯头



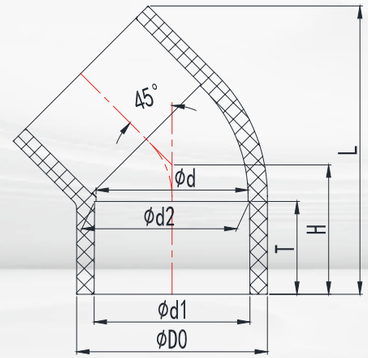

产品参数 SPECIFICATIONS

尺寸 Size DN（De）	外形尺寸 Dimensions（mm）							公称压力 Nominal Pressure PN(kg/cm²)
	D0	d1	d2	d	T	H	L	
15(20)	26.30	20.30	19.95	18.00	16.20	22.10	46.90	16
20(25)	31.80	25.30	24.95	23.00	18.70	25.70	54.90	16
25(32)	38.60	32.30	31.90	30.00	22.20	30.60	66.20	16
32(40)	48.20	40.40	39.90	38.00	26.20	36.30	79.30	12.5
40(50)	58.30	50.40	49.90	48.00	31.20	43.30	95.70	12.5
50(63)	73.35	63.40	62.90	61.00	37.70	52.50	116.90	12.5
65(75)	86.75	75.40	74.90	70.90	43.70	64.60	142.50	12.5
80(90)	104.38	90.50	89.90	85.90	51.20	75.60	166.90	12.5
100(110)	124.42	110.60	109.90	103.90	61.20	89.20	197.60	12.5
De125	141.52	125.70	124.90	118.90	68.70	100.70	222.90	12.5
125(140)	158.58	140.80	139.90	133.90	76.20	112.40	248.90	12.5
150(160)	180.15	160.80	159.90	153.90	86.20	126.90	281.90	12.5
De200	226.58	201.00	199.90	193.50	106.20	157.10	349.50	12.5
200(225)	254.60	226.20	224.90	216.90	119.10	175.70	391.50	12.5
De250	270.90	251.15	249.41	247.00	132.00	193.30	432.20	10
250(280)	314.80	281.46	280.16	278.00	147.00	209.60	469.10	10
300(315)	344.50	316.55	315.05	312.00	165.00	233.50	541.20	10
350(355)	386.20	356.63	355.03	326.00	183.50	272.80	602.20	10
400(400)	433.80	401.60	400.00	398.50	208.00	298.52	662.20	10

ELBOW 90°

90°弯头



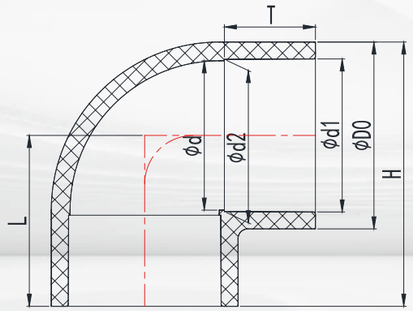

产品参数 SPECIFICATIONS

尺寸 Size DN（De）	外形尺寸 Dimensions（mm）							公称压力 Nominal Pressure PN(kg/cm²)
	D0	d1	d2	d	T	L	H	
15(20)	26.30	20.30	19.95	18.00	16.20	27.70	40.85	16
20(25)	31.80	25.30	24.95	23.00	18.70	32.70	48.60	16
25(32)	38.60	32.30	31.90	30.00	22.20	39.70	59.00	16
32(40)	48.20	40.40	39.90	38.00	26.20	47.70	71.80	12.5
40(50)	58.30	50.40	49.90	48.00	31.20	57.70	86.85	12.5
50(63)	73.35	63.40	62.90	61.00	37.70	70.70	107.38	12.5
65(75)	86.75	75.40	74.90	70.90	43.70	82.50	125.88	12.5
80(90)	104.38	90.50	89.90	85.90	51.20	97.50	149.69	12.5
100(110)	124.42	110.60	109.90	103.90	61.20	117.50	179.71	12.5
De125	141.52	125.70	124.90	118.90	68.70	132.50	203.26	12.5
125(140)	158.58	140.80	139.90	133.90	76.20	148.00	227.29	12.5
150(160)	180.15	160.80	159.90	153.50	86.20	168.50	258.58	12.5
De200	226.58	201.00	199.90	193.50	106.20	208.00	321.29	12.5
200(225)	254.60	226.20	224.90	216.90	119.10	233.60	360.90	12.5
De250	271.40	251.15	249.41	247.00	132.00	261.00	396.70	10
250(280)	314.80	281.46	280.16	278.00	147.00	276.00	433.40	10
300(315)	344.50	316.55	315.05	312.00	165.00	326.50	498.75	10
350(355)	385.00	356.63	355.03	326.00	183.50	368.25	560.75	10
400(400)	432.70	401.60	400.00	398.50	208.00	413.00	629.35	10

EQUAL TEE

正三通



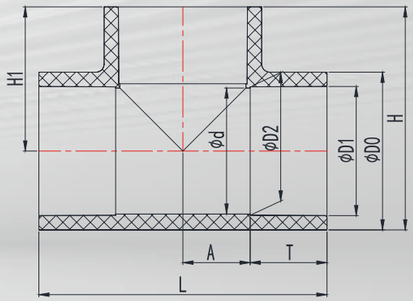

产品参数 SPECIFICATIONS

尺寸 Size DN（De）	外形尺寸 Dimensions（mm）								公称压力 Nominal Pressure PN(kg/cm²)
	D0	D1	D2	d	T	L	H1	H	
15(20)	26.30	20.30	19.95	18.00	16.20	55.40	27.70	40.85	16
20(25)	31.80	25.30	24.95	23.00	18.70	65.40	32.70	48.60	16
25(32)	38.60	32.30	31.90	30.00	22.20	79.40	39.70	59.00	16
32(40)	48.20	40.40	39.90	38.00	26.20	97.20	47.70	71.80	12.5
40(50)	58.30	50.40	49.90	48.00	31.20	114.50	57.70	86.85	12.5
50(63)	73.35	63.40	62.90	61.00	37.70	141.00	70.70	107.38	12.5
65(75)	86.75	75.40	74.90	70.90	43.70	165.00	82.50	125.88	12.5
80(90)	104.38	90.50	89.90	85.90	51.20	194.00	97.50	149.69	12.5
100(110)	124.42	110.60	109.90	103.90	61.20	234.00	117.50	179.71	12.5
De125	141.52	125.70	124.90	118.90	68.70	264.00	132.50	203.26	12.5
125(140)	158.58	140.80	139.90	133.90	76.20	296.00	148.00	227.29	12.5
150(160)	180.15	160.80	159.90	153.90	86.20	334.00	168.00	258.08	12.5
De200	226.58	201.00	199.90	193.50	106.20	415.00	208.00	321.29	12.5
200(225)	254.60	226.20	224.90	216.90	119.10	463.50	233.50	360.80	12.5
De250	272.00	251.15	249.41	247.00	132.00	261.00	397.00	522.00	10
250(280)	314.80	281.46	280.16	278.00	147.00	276.00	433.40	552.00	10
300(315)	344.50	316.55	315.05	312.00	165.00	326.50	498.75	653.00	10
350(355)	385.80	356.63	355.03	326.00	183.50	368.25	561.15	736.50	10
400(400)	433.70	401.60	400.00	398.50	208.00	413.00	629.85	826.00	10

REDUCING TEE

异三通



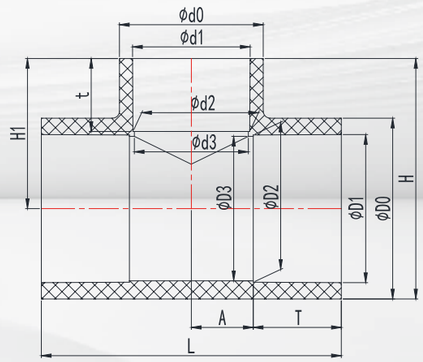

产品参数 SPECIFICATIONS

尺寸 Size DN（De）	外形尺寸 Dimensions（mm）													公称压力 Nominal Pressure PN(kg/cm²)
	D0	D1	D2	D3	d0	d1	d2	d3	T	t	H1	H	L	
20X15(25*20)	31.80	25.25	24.95	23.00	26.30	20.30	19.95	18.00	18.70	16.20	30.20	46.10	60.40	16
25X20(32*25)	38.60	32.30	31.90	30.00	31.80	25.30	24.95	23.00	22.20	16.20	36.20	55.50	72.10	16
32X25(40*32)	48.20	40.35	39.90	38.00	38.60	32.30	31.90	30.00	26.20	22.20	43.70	67.80	87.40	12.5
40X25(50*32)	58.10	50.35	49.90	48.00	38.80	32.30	31.90	30.00	31.20	22.20	48.50	77.55	97.40	12.5
40X32(50*40)	58.30	50.35	49.90	48.00	48.20	40.35	39.90	38.00	31.20	26.20	52.70	81.85	65.25	12.5
50X25(63*32)	73.10	63.40	62.90	61.00	38.80	32.30	31.90	30.00	37.70	22.20	55.20	91.75	110.40	12.5
50X40(63*50)	73.35	63.40	62.90	61.00	61.90	50.35	49.90	48.00	37.70	31.20	64.20	100.88	127.70	12.5
65X25(75*32)	86.70	75.40	74.90	70.90	38.80	32.30	31.90	23.00	43.70	22.20	61.20	104.55	140.30	12.5
65X50(75*63)	86.75	75.40	74.90	70.90	77.50	63.40	62.90	61.00	43.70	37.70	77.30	120.68	152.20	12.5
80X25(90*32)	104.30	90.50	89.90	85.90	38.80	32.30	31.90	23.00	51.20	22.20	68.70	120.85	168.20	12.5
80X50(90*63)	104.30	90.50	89.90	85.90	73.10	63.40	62.90	61.00	51.20	37.70	84.20	136.35	168.20	12.5
80X65(90*75)	104.38	90.50	89.90	85.90	91.20	75.40	74.90	70.90	51.20	43.70	92.30	144.49	180.70	12.5
100X25(110*32)	124.40	110.60	109.90	103.90	38.80	32.30	31.90	23.00	61.20	22.20	77.70	139.9	190.00	12.5
100X40(110*50)	124.40	110.60	109.90	103.90	58.10	50.35	49.90	48.00	61.20	31.20	88.50	150.7	189.00	12.5
100X50(110*63)	124.40	110.60	109.90	103.90	73.10	63.40	62.90	61.00	61.20	37.70	95.00	157.2	190.00	12.5
100X80(110*90)	124.42	110.60	109.90	103.90	104.38	90.50	89.90	85.90	61.20	51.20	110.35	172.56	214.80	12.5
125X50(140*63)	158.50	140.75	139.90	133.90	73.10	63.40	62.90	61.00	76.20	37.70	113.50	192.75	247.00	12.5
125X100(140*110)	158.58	140.75	139.90	133.90	124.42	110.60	109.90	103.90	76.20	61.20	136.70	215.99	266.40	12.5
150X50(160*63)	180.60	160.80	159.90	153.90	73.10	63.40	62.90	61.00	86.20	37.70	126.00	216.3	286.00	12.5
150X100(160*110)	180.60	160.80	159.90	153.90	124.40	110.60	109.90	103.90	86.20	61.20	144.50	234.8	286.00	12.5
150X125(160*140)	180.15	160.80	159.90	153.90	158.58	140.75	139.90	133.90	86.20	76.20	161.50	251.58	315.50	12.5
De200X160	226.58	201.00	199.90	193.50	180.15	160.80	159.90	153.90	119.10	86.20	209.70	310.70	400.00	12.5
200X80(225*90)	254.60	226.20	224.90	216.90	104.30	90.50	89.90	85.90	118.70	51.20	168.50	295.8	384.00	12.5
200X100(225*110)	259.40	226.20	224.90	216.90	127.00	110.60	109.90	103.90	62.00	120.00	174.00	303.7	384.00	12.5
200X150(225*160)	254.60	226.20	224.90	216.90	180.15	160.80	159.90	153.90	119.10	86.20	209.70	337.00	403.00	12.5
De250*110	272.00	251.15	249.41	247.00	120.50	110.42	109.92	108.00	62.00	132.00	191.00	327.00	377.00	10
De250*160	270.00	251.15	249.41	247.00	173.00	160.62	159.87	158.00	87.00	132.00	216.00	351.00	427.00	10
De250*200	274.10	251.15	249.41	247.00	220.00	200.90	199.85	197.00	107.00	132.00	236.00	373.05	474.00	10
De280*225	314.80	281.50	279.90	278.00	259.20	226.20	224.90	218.90	120.00	147.00	276.00	433.40	526.50	10
De280*250	314.80	281.46	280.16	278.00	280.00	251.15	199.85	247.00	132.00	147.00	276.00	433.40	580.00	10
300X100(315*110)	344.50	316.55	315.05	312.00	125.75	110.42	109.92	108.00	62.00	165.00	223.50	395.75	448.00	10
300X150(315*160)	344.50	316.55	315.05	312.00	178.60	160.62	159.87	158.00	87.00	165.00	248.50	420.75	498.00	10
De315*200	344.50	316.55	315.05	312.00	220.90	200.90	199.85	197.00	107.00	165.00	268.50	440.75	538.00	10
De315*250	354.70	316.70	314.90	306.90	288.60	251.30	249.90	241.90	132.00	165.00	282.00	459.35	644.00	10
350X200(355*225)	388.00	356.80	355.00	326.00	259.40	226.20	224.90	216.90	118.70	183.50	298.50	491.60	615.00	10
De355*250	386.50	356.63	355.03	326.00	273.40	251.15	249.41	247.00	132.00	183.50	311.50	504.75	638.50	10
350X300(355*315)	388.00	356.80	355.00	326.00	344.20	316.70	314.90	306.90	165.00	183.50	350.60	544.60	693.00	10
De400*200	432.70	401.60	400.00	398.50	220.90	200.90	199.85	197.00	107.00	208.00	318.60	534.95	623.00	10
400X300(400*315)	432.70	401.60	400.00	398.50	344.50	316.55	315.05	312.00	165.00	208.00	370.00	586.35	752.00	10

EQUAL CROSS

正四通



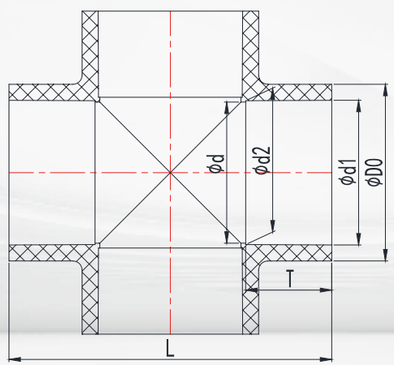

产品参数 SPECIFICATIONS

尺寸 Size DN（De）	外形尺寸 Dimensions（mm）						公称压力 Nominal Pressure PN(kg/cm²)
	D0	d1	d2	d	T	L	
15(20)	26.30	20.30	19.95	18.00	16.20	55.40	12.5
20(25)	31.80	25.30	24.95	21.00	18.70	65.40	12.5
25(32)	38.60	32.30	31.90	28.00	22.20	79.40	12.5
32(40)	48.20	40.35	39.90	36.00	26.20	95.40	12.5
40(50)	58.30	50.35	49.90	46.00	31.20	115.40	12.5
50(63)	73.35	63.40	612.90	59.00	37.70	141.00	12.5
65(75)	86.75	75.40	74.90	70.90	43.70	165.00	12.5
80(90)	104.38	90.50	89.90	85.90	51.20	194.50	12.5
100(110)	124.42	110.60	109.90	103.90	61.20	234.50	12.5
De125	144.30	125.70	124.90	118.90	68.70	263.80	12.5
125(140)	158.58	140.75	139.90	133.90	76.20	295.00	12.5
150(160)	180.15	160.80	159.90	153.90	86.20	336.00	12.5
De200	230.00	201.00	199.90	193.90	106.20	414.00	16
200(225)	259.40	226.20	224.90	216.90	119.10	465.00	16
De250	287.90	251.30	249.90	241.40	131.65	515.50	16
250(280)	314.80	281.20	280.10	276.00	147.00	582.00	16
300(315)	354.00	316.70	314.90	307.00	164.30	643.00	16

REDUCER

异径



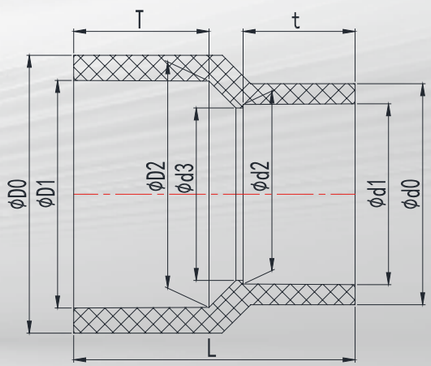

产品参数 SPECIFICATIONS

尺寸 Size DN（De）	外形尺寸 Dimensions（mm）										公称压力 Nominal Pressure PN(kg/cm²)
	D0	D1	D2	d0	d1	d2	d3	t	T	L	
20X15(25*20)	31.80	25.30	24.95	26.30	20.30	19.95	18.00	16.20	18.70	40.00	16
25X20(32*25)	38.60	32.30	31.90	31.80	25.30	24.95	23.00	18.70	22.20	47.40	16
32X25(40*32)	48.20	40.35	39.90	38.60	32.30	31.90	30.00	22.20	26.20	54.80	12.5
40X32(50*40)	58.30	50.35	49.90	48.20	40.35	39.90	38.00	26.20	31.20	65.00	12.5
50X25(63*32)	73.10	63.40	62.90	38.80	32.30	31.90	30.00	22.20	37.70	79.50	12.5
50X40(63*50)	73.35	63.40	62.90	61.90	58.30	49.90	48.00	31.20	37.70	77.70	12.5
65X25(75*32)	86.70	75.40	74.90	38.80	32.30	31.90	30.00	22.20	43.70	92.20	12.5
65X50(75*63)	86.75	75.40	74.90	77.50	73.35	62.90	61.00	37.70	43.70	92.50	12.5
80X65(90*75)	104.38	90.50	89.90	91.20	86.75	74.90	70.90	43.70	51.20	107.30	12.5
100X50(110*63)	124.40	110.60	109.90	73.10	63.40	62.90	61.00	37.70	61.20	127.40	12.5
100X80(110*90)	124.42	110.60	109.90	104.38	104.38	89.90	85.90	51.20	61.20	127.40	12.5
125X100(140*110)	158.58	140.75	139.90	124.42	110.60	109.90	103.90	43.70	76.20	157.70	12.5
150X100(160*110)	180.60	160.70	159.90	124.40	110.60	109.90	103.90	43.70	87.00	177.80	12.5
150X125(160*140)	180.15	160.70	159.90	158.58	140.75	139.90	133.90	51.20	87.00	177.30	12.5
De200*160	226.58	201.00	199.90	180.15	160.80	159.90	153.90	86.20	106.20	217.50	12.5
200X150(225*160)	226.58	226.20	224.90	180.15	160.80	159.90	153.90	86.20	119.10	242.50	12.5
De 250*200	270.00	251.15	249.41	217.20	200.90	199.85	197.00	107.00	132.00	272.00	10
De 280*250	315.50	281.46	280.16	280.40	251.15	249.41	247.00	132.00	147.00	304.00	10
De 315*250	342.80	316.55	315.05	273.70	251.15	249.41	247.00	132.00	165.00	351.00	10
DN300*100(315*110)	343.30	316.55	315.05	125.75	110.42	109.92	108.00	62.00	165.00	380.60	10
DN300*150(315*160)	343.00	316.55	315.05	178.60	160.62	159.87	158.00	87.00	165.00	371.00	10
DN300*200(315*225)	342.80	316.55	315.05	246.70	226.02	224.83	221.00	119.50	165.00	354.50	10
DN350*200(355*200)	386.10	356.63	355.03	220.90	200.90	199.85	197.00	107.00	183.50	400.00	10
DN350*300(355*315)	386.10	356.63	355.03	344.00	316.55	315.05	312.00	165.00	183.50	384.00	10
De400*250	431.30	401.60	400.00	273.70	251.15	249.41	247.00	132.00	208.00	447.00	10
DN400*300(400*315)	432.70	401.60	400.00	344.30	316.55	315.05	312.00	165.00	208.00	438.50	10

CAP
管堵



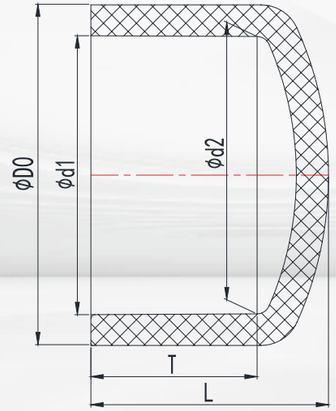

产品参数 SPECIFICATIONS

尺寸 Size DN（De）	外形尺寸 Dimensions（mm）					公称压力 Nominal Pressure PN(kg/cm²)
	D0	d0	d1	d2	d	
15(20)	26.30	20.30	19.95	16.20	21.90	16
20(25)	31.80	25.30	24.95	18.70	25.70	16
25(32)	39.90	32.30	31.90	22.20	30.70	16
32(40)	49.70	40.40	39.90	26.20	36.90	16
40(50)	61.90	50.40	49.90	31.20	44.70	16
50(63)	77.90	63.40	62.90	37.70	54.00	16
65(75)	91.20	75.40	74.90	43.70	62.60	16
80(90)	107.60	90.50	89.90	51.20	73.30	16
100(110)	127.00	110.60	109.90	61.20	84.50	16
De125	144.30	125.70	124.90	68.70	96.10	16
125(140)	161.60	140.80	139.90	76.20	109.70	16
150(160)	184.60	160.80	159.90	86.20	126.20	16
De180	202.60	180.90	179.90	97.00	142.90	16
De200	230.50	201.00	199.90	106.20	151.10	16
200(225)	259.40	226.20	224.90	119.10	170.40	16
De250	273.70	251.15	249.41	132.00	185.00	10
250(280)	315.00	281.46	280.16	147.00	213.00	10
300(315)	343.50	316.55	315.05	165.00	216.00	10
350(355)	384.60	356.63	355.03	183.50	255.50	10
400(400)	430.70	401.60	400.00	208.00	295.00	10

COUPLING
管箍



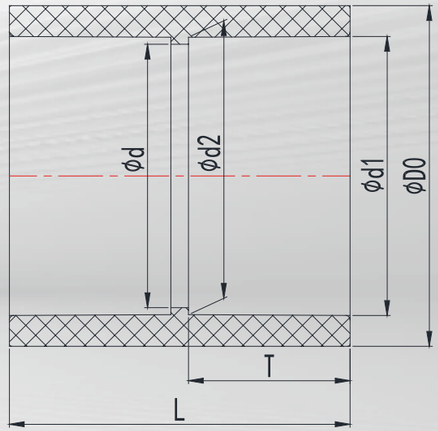

产品参数 SPECIFICATIONS

尺寸 Size DN（De）	外形尺寸 Dimensions（mm）						公称压力 Nominal Pressure PN(kg/cm²)
	D0	d1	d2	d	T	L	
15(20)	26.30	20.30	19.95	18.00	16.20	34.40	16
20(25)	31.80	25.30	24.95	23.00	18.70	39.00	16
25(32)	38.60	32.30	31.90	30.00	22.20	46.40	16
32(40)	48.20	40.40	39.90	38.00	26.20	54.40	12.5
40(50)	58.30	50.40	49.90	48.00	31.20	64.40	12.5
50(63)	73.35	63.40	62.90	61.00	37.70	77.10	12.5
65(75)	86.75	75.40	74.90	68.20	43.70	90.00	12.5
80(90)	104.38	90.50	89.90	83.80	51.20	106.40	12.5
100(110)	124.42	110.60	109.90	103.00	61.20	128.30	12.5
De125	141.52	125.70	124.90	118.60	68.70	144.00	12.5
125(140)	158.58	140.80	139.90	133.80	76.20	159.50	12.5
150(160)	180.15	160.80	159.90	153.80	86.20	179.70	12.5
De200	226.58	201.00	199.90	193.50	106.20	217.50	12.5
200(225)	254.60	226.20	224.90	216.90	119.10	243.00	12.5
De250	269.80	251.15	249.41	247.00	132.00	279.00	10
250(280)	314.80	281.46	280.16	278.00	147.00	299.50	10
300(315)	343.70	316.55	315.05	312.00	165.00	343.00	10
350(355)	384.60	356.63	355.03	326.00	183.50	373.00	10
400(400)	430.70	401.60	400.00	398.50	208.00	423.00	10

UNION
由任（由令）



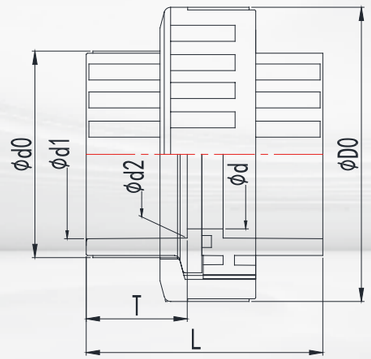

FEMALE ADAPTOR
内丝



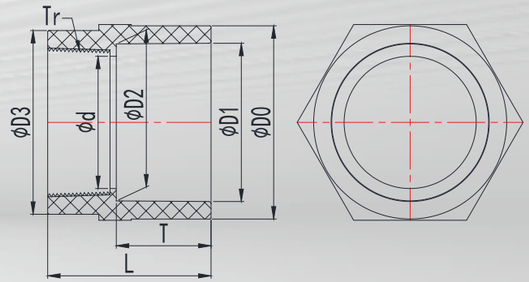

产品参数 SPECIFICATIONS

尺寸 Size DN（De）	外形尺寸 Dimensions（mm）							公称压力 Nominal Pressure PN(kg/cm²)
	D0	d0	d1	d2	d	T	L	
15(20)	47.00	26.80	20.30	19.95	15.50	16.50	41.50	10
20(25)	53.90	32.00	25.30	24.95	20.00	19.00	48.00	10
25(32)	67.00	40.30	32.30	31.90	26.00	22.50	55.00	10
32(40)	78.50	49.10	40.35	39.90	34.00	26.50	63.50	10
40(50)	93.00	61.60	50.35	49.90	43.00	31.50	75.50	10
50(63)	110.60	76.00	63.40	62.90	56.00	38.00	89.50	10
65(75)	130.00	89.60	75.40	74.90	67.00	44.00	102.00	10
80(90)	147.50	105.50	90.50	89.90	82.00	51.50	120.00	10
100(110)	173.00	126.50	110.60	109.90	102.00	61.50	140.00	10

产品参数 SPECIFICATIONS

尺寸 Size DN（De）	外形尺寸 Dimensions（mm）								公称压力 Nominal Pressure PN(kg/cm²)
	D0	D1	D2	D3	d	T	L	Tr 螺纹 PT	
15(20)	27.10	20.30	19.95	27.60	16.50	16.50	33.50	1/2"	16
20(25)	32.50	25.30	24.95	33.60	22.00	19.00	37.00	3/4"	16
25(32)	40.30	32.30	31.90	41.30	28.00	22.50	42.20	1"	16
32(40)	49.50	40.35	39.90	51.10	36.00	26.50	49.00	1-1/4"	16
40(50)	61.60	50.35	49.90	59.00	42.00	31.50	54.00	1-1/2"	16
50(63)	77.40	63.40	62.90	73.60	53.00	38.00	65.50	2"	16
65(75)	90.40	75.40	74.90	90.20	68.00	44.00	76.00	2-1/2"	16
80(90)	106.50	90.50	89.90	107.60	80.00	51.50	86.50	3"	16
100(110)	126.90	110.60	109.90	129.40	104.50	61.50	103.00	4"	16

MALE ADAPTOR

外丝



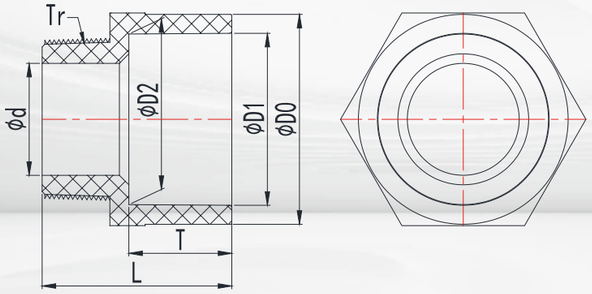

产品参数 SPECIFICATIONS

尺寸 Size DN（De）	外形尺寸 Dimensions（mm）							公称压力 Nominal Pressure PN(kg/cm²)
	D0	D1	D2	d	T	L	Tr 螺纹 PT	
15(20)	26.80	20.30	19.95	11.30	16.50	35.00	1/2"	16
20(25)	32.50	25.30	24.95	16.10	19.00	38.50	3/4"	16
25(32)	40.30	32.30	31.90	21.40	22.50	44.50	1"	16
32(40)	49.50	40.35	39.90	28.80	26.50	51.00	1-1/4"	16
40(50)	61.60	50.35	49.90	32.50	31.50	56.50	1-1/2"	16
50(63)	77.00	63.40	62.90	41.30	38.00	69.40	2"	16
65(75)	90.40	75.40	74.90	55.80	44.00	79.90	2-1/2"	16
80(90)	106.50	90.50	89.90	67.30	51.50	91.50	3"	16
100(110)	126.90	110.60	109.90	91.60	61.50	108.00	4"	16

ONE-PIECE FLANGE

单片式法兰

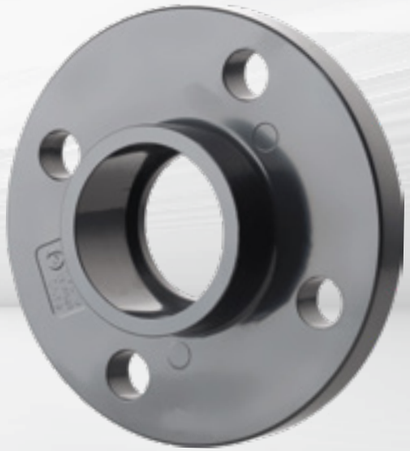

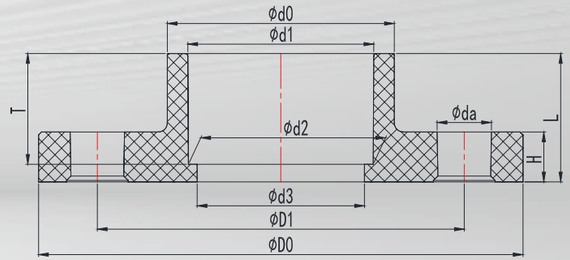

产品参数 SPECIFICATIONS

尺寸 Size DN（De）	外形尺寸 Dimensions（mm）											公称压力 Nominal Pressure PN(kg/cm²)
	D0	D1	d0	d1	d2	d3	da	T	H	L	螺孔数 n Bolts No n	
15(20)	95.00	65.00	26.80	20.30	19.95	16.00	14.00	16.20	12.40	20.20	4	16
20(25)	105.00	75.00	32.50	25.30	24.95	21.00	14.00	18.70	13.50	22.70	4	16
25(32)	115.00	85.00	40.30	32.30	31.90	28.00	14.00	22.20	15.00	26.20	4	16
32(40)	140.00	100.00	49.30	40.35	39.90	36.00	18.00	26.20	14.40	31.20	4	16
40(50)	150.00	110.00	61.60	50.35	49.90	46.00	18.00	31.20	15.50	36.20	4	16
50(63)	165.00	125.00	77.40	63.40	62.90	57.00	18.00	37.70	15.50	43.70	4	16
65(75)	185.00	145.00	90.40	75.40	74.90	69.00	18.00	43.70	17.30	50.20	4	16
80(90)	200.00	160.00	106.50	90.50	89.90	83.00	18.00	51.20	18.50	58.70	8	16
100(110)	220.00	180.00	126.90	110.60	109.90	103.00	18.00	61.20	20.30	68.70	8	16
De125	250.00	210.00	144.00	125.70	124.90	117.00	18.00	68.70	22.00	77.20	8	16
125(140)	250.00	210.00	161.30	140.75	139.90	131.50	18.00	76.20	22.20	84.70	8	16
150(160)	285.00	240.00	184.30	160.80	159.90	151.00	22.00	86.20	25.00	95.70	8	16
De180	285.00	240.00	202.60	180.80	179.90	166.00	22.00	97.00	25.50	115.00	8	16
De200	340.00	295.00	227.00	201.00	199.90	190.00	22.00	106.20	26.30	116.20	8	10
200(225)	340.00	295.00	254.10	226.20	224.90	216.00	22.00	119.10	27.00	129.70	8	10
De250	394.00	350.00	272.50	251.15	249.41	247.00	22.00	132.00	31.00	156.00	12	10
250(280)	403.00	355.00	303.90	281.46	280.16	278.00	22.00	147.00	29.70	167.00	12	10
300(315)	445.00	400.00	342.60	316.70	314.90	302.00	22.00	167.70	30.00	171.70	12	10

VANSTONE FLANGE

活套平承法兰



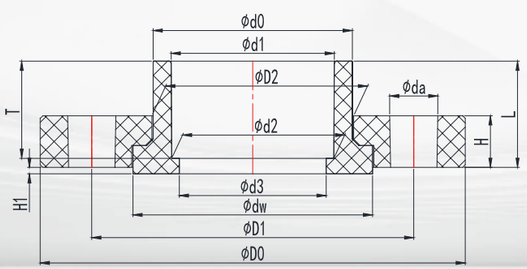

CAMBERED SURFACE ADAPTOR

马鞍（弧面）接头



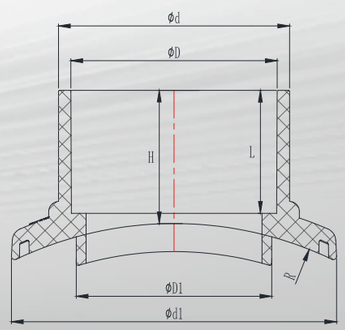

产品参数 SPECIFICATIONS

尺寸 Size DN（De）	外形尺寸 Dimensions（mm）													公称压力 Nominal Pressure PN(kg/cm²)
	D0	D1	D2	d0	d1	d2	d3	dw	da	T	H1	H	L	螺孔数 n Bolts No n
15(20)	95	65	31	30.5	20.3	19.95	16	37.6	14	23.22	2.5	13	24.7	4	PN16
20(25)	105	75	37.9	36.9	25.35	24.95	20.6	47	14	26.4	2.5	14	27.9	4	PN16
25(32)	115	85	45.7	44.7	32.35	31.95	27	56	14	29.58	2.5	15	31.08	4	PN16
32(40)	140	100	55	54	40.4	39.95	36	64	18	32.75	2.5	15	35.25	4	PN16
40(50)	150.00	110.00	62.60	61.60	50.35	49.90	45.00	74.00	18.00	31.20	2.50	18.00	33.70	4	PN16
50(63)	165.00	125.00	78.40	77.40	63.40	62.90	57.00	93.00	18.00	37.70	2.50	20.00	41.20	4	PN16
65(75)	185.00	145.00	91.40	90.40	75.40	74.90	69.00	110.00	18.00	43.70	2.50	23.00	47.20	4	PN16
80(90)	200.00	160.00	107.50	106.50	90.50	89.90	83.00	126.00	18.00	51.20	2.50	26.00	55.70	8	PN16
100(110)	220.00	180.00	127.90	126.90	110.60	109.90	103.00	147.00	18.00	61.20	2.50	28.00	65.70	8	PN16
De125	250.00	210.00	145.00	144.00	125.70	124.90	117.00	164.00	18.00	68.70	2.50	29.00	74.20	8	PN16
125(140)	250.00	210.00	162.30	161.30	140.75	139.90	131.50	181.00	18.00	76.20	2.50	30.00	81.70	8	PN16
150(160)	285.00	240.00	186.30	184.30	160.80	159.90	151.00	204.00	22.00	86.20	3.00	32.00	92.20	8	PN16
De180	285.00	240.00	229.00	227.00	201.00	199.90	190.00	257.40	22.00	106.20	3.00	36.00	112.20	8	PN10
De200	340.00	295.00	229.00	227.00	201.00	199.90	190.00	256.00	22.00	106.20	3.00	36.00	112.20	12	PN16
200(225)	340.00	295.00	256.10	254.10	226.20	224.90	216.00	271.00	22.00	118.70	3.00	38.00	127.70	12	PN16
De200	340.00	295.00	229.00	227.00	201.00	199.90	190.00	256.00	22.00	106.20	3.00	36.00	112.20	8	PN10
200(225)	340.00	295.00	256.10	254.10	226.20	224.90	216.00	271.00	22.00	118.70	3.00	38.00	127.70	8	PN10
De250	395.00	350.00	283.30	281.30	251.30	249.90	239.50	310.00	22.00	131.20	3.50	40.00	138.20	12	PN10
250(280)	398.00	351.50	308.00	305.50	281.50	280.15	272.00	325.00	22.00	147.00	10.00	35.00	159.00	12	PN10
300(315)	445.00	400.00	356.60	354.60	316.70	314.90	302.00	373.00	22.00	167.70	5.00	44.00	175.70	12	PN10
350(355)	510.00	460.00	388.60	386.60	356.80	355.00	326.00	417.00	22.00	184.00	32.00	40.00	197.00	16	PN10
400(400)	570.00	515.00	438.00	432.00	402.00	400.00	388.00	463.00	26.00	208.00	35.00	43.80	220.00	16	PN10

产品参数 SPECIFICATIONS

尺寸 Size DN（De）	外形尺寸 Dimensions（mm）						
	d	D	D1	d1	R	H	L
De75*32	38	32	28	60	37.5	25	22
De90*32	38	32	28	60	45	25	22
De110*32	38	32	28	60	55	25	22
De110*50	57	50	55	100	55	34	31
De110*63	71	63	60	100	55	41	38
De140*32	38	32	28	59	70	25	22
De140*50	57	50	55	100	70	34	31
De140*63	71	63	60	100	70	41	38
De160*32	38	32	28	60	80	25	22
De160*50	57	50	55	100	80	34	31
De160*63	71	63	60	100	80	41	38
De225*32	38	32	28	60	112.5	25	22
De225*50	57	50	55	100	112.5	34	31
De225*75	84	75	70	114	112.5	41	38
De225*90	101.4	90	90	160	112.5	66.3	51.2
De250*32	38	32	28	60	125	25	22
De250*63	71	63	60	100	125	41	38
De250*75	84	75	70	114	125	41	38
De250*90	101.4	90	90	160	125	66.3	51.2
De280*32	38	32	28	60	140	25	22
De280*50	57	50	55	100	140	34	31
De280*63	71	63	60	100	140	41	38
De280*75	84	75	70	114	140	41	38
De315*32	38	32	28	60	157.5	25	22
De315*50	57	50	55	100	157.5	34	31
De315*63	71	63	60	100	157.5	41	38
De315*75	84	75	70	114	157.5	41	38
De315*90	101.4	90	90	160	157.5	66.8	51.2

COUPLING(TYPE II)

卡套（拷贝林）



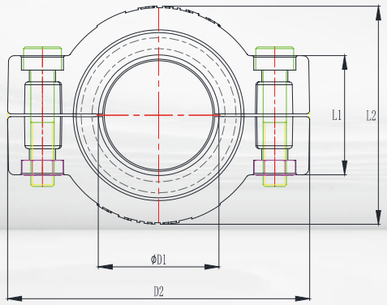

产品参数 SPECIFICATIONS

尺寸 Size DN（De）	外形尺寸 Dimensions（mm）			
	D1	D2	L1	L2
32(40)	42	104	41	74
40(50)	48	110	41	80
50(63)	60	122	41	92
65(75)	73	135	41	105
80(90)	89	151	41	121
100(110)	114	176	41	146

COUPLING ADAPTOR

卡套（拷贝林）接头



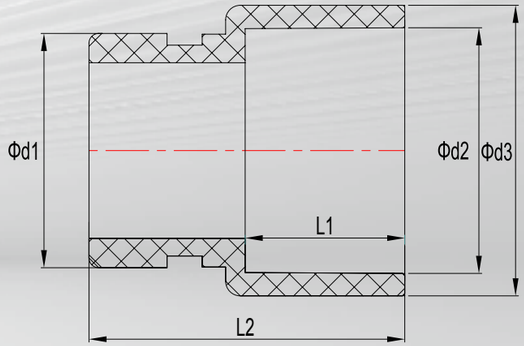

产品参数 SPECIFICATIONS

尺寸 Size	外形尺寸 Dimensions（mm）				
	d1	d2	d3	L1	L2
DN32/De32	42	32	40	22	50
DN40/De40	48	40	50	26	54
DN40/De50	48	50	60	33	65
DN50/De50	60	50	62	33	61
DN50/De63	60	63	73	38	73
DN65/De75	73	75	86	44	78
DN80/De90	89	90	104	51	86
DN100/De110	114	110	124	61	96

INSTRUMENT CONNECTOR

仪表接头

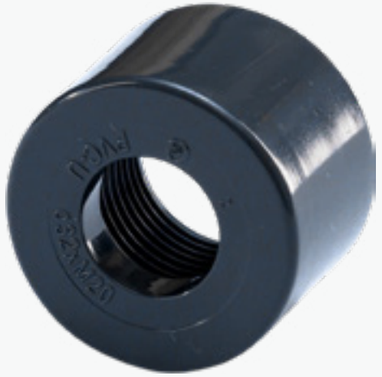

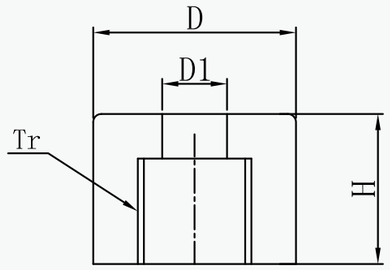

产品参数 SPECIFICATIONS

尺寸 Size	外形尺寸 Dimensions（mm）			
	D	D1	H	Tr 螺纹 PT
d20*1/4"	20.00	8.00	16.00	1/4"
d20*M14*1.5	20.00	8.00	16.00	M14*1.5
d25*1/2"	25.00	12.00	18.50	1/2"
d25*3/8"	25.00	8.00	18.50	3/8"
d25*M14*1.5	25.00	8.00	18.50	M14*1.5
d32-M20*1.5	32.00	15.00	22.00	M20*1.5
d40*1"	40.00	25.00	26.00	1"

MALE THREADED UNION

外丝活接



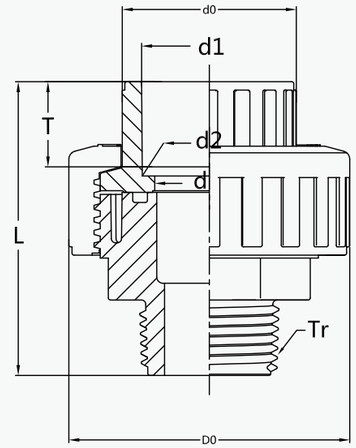

产品参数 SPECIFICATIONS

尺寸 Size DN（De）	外形尺寸 Dimensions（mm）							
	D0	d0	d1	d2	d	T	L	Tr 螺纹 PT
15(20)	47.00	26.80	20.30	19.95	15.50	16.50	56.1	1/2"
20(25)	53.90	32.00	25.30	24.95	20.00	19.00	61.5	3/4"
25(32)	67.00	40.30	32.30	31.90	26.00	22.50	70.5	1"

FEMALE THREADED UNION

内丝活接



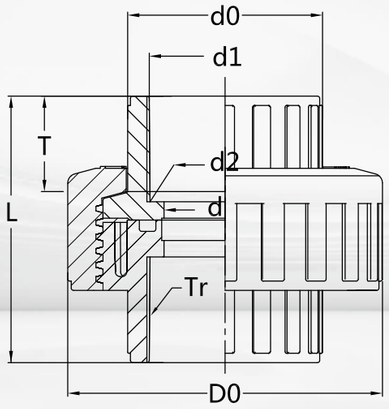

产品参数 SPECIFICATIONS

尺寸 Size DN（De）	外形尺寸 Dimensions（mm）							
	D0	d0	d1	d2	d	T	L	Tr 螺纹 PT
15(20)	47.00	26.80	20.30	19.95	15.50	16.50	41.5	1/2"
20(25)	53.90	32.00	25.30	24.95	20.00	19.00	48	3/4"
25(32)	67.00	40.30	32.30	31.90	26.00	22.50	55	1"
32(40)	78.50	49.10	40.35	39.90	34.00	26.50	63.5	1-1/4"
40(50)	93.00	61.60	50.35	49.90	43.00	31.50	75.5	1-1/2"
50(63)	110.60	76.00	63.40	62.90	56.00	38.00	89.5	2"

Y-Tee

斜三通



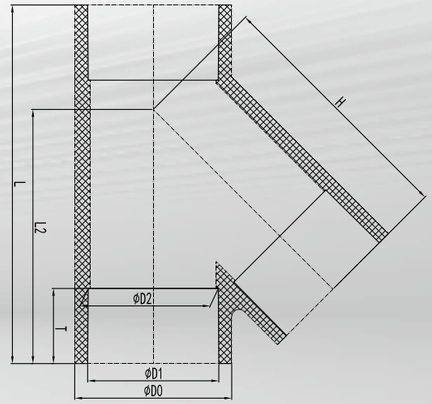

产品参数 SPECIFICATIONS

尺寸 Size DN（De）	外形尺寸 Dimensions（mm）							压力等级 Pressure level
	D1	d1	d2	T	L	L2	H	
15(20)	29.10	20.30	19.95	23.22	82.50	53.22	53.22	PN16
20(25)	34.90	25.30	24.95	26.40	97.80	62.40	62.40	PN16
25(32)	42.90	32.30	31.90	29.58	114.20	74.58	74.58	PN16
32(40)	52.00	40.40	39.90	32.75	131.50	88.75	88.75	PN16
40(50)	60.00	50.40	49.90	35.93	149.90	101.93	101.93	PN16
50(63)	75.00	63.40	62.90	39.10	177.20	124.10	124.10	PN16
65(75)	91.00	75.40	74.90	45.50	210.00	146.50	146.50	PN16
80(90)	107.00	90.50	89.90	51.20	244.50	173.20	173.20	PN16
100(110)	134.00	110.60	109.90	61.20	298.50	210.20	210.20	PN16
125(140)	168.00	140.70	139.90	76.20	376.40	266.20	266.20	PN16
150(160)	191.00	160.80	159.90	86.20	426.40	299.20	299.20	PN16
200(225)	260.00	226.20	224.90	118.70	587.40	414.70	414.70	PN16

BLIND UNION

盲油任



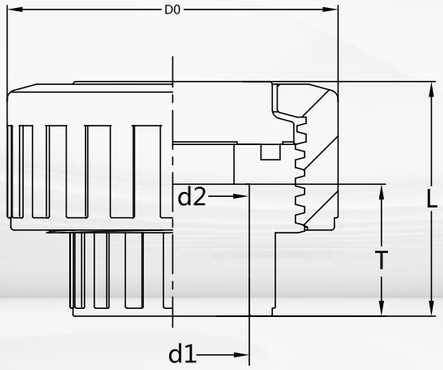

产品参数 SPECIFICATIONS

尺寸 Size DN（De）	外形尺寸 Dimensions（mm）				
	D0	d1	d2	T	L
15(20)	47.00	20.30	19.95	16.50	34.50
20(25)	53.90	25.30	24.95	19.00	34.50
25(32)	67.00	32.30	31.90	22.50	44.00
32(40)	78.50	40.35	39.90	26.50	45.00
40(50)	93.00	50.35	49.90	31.50	54.50
50(63)	110.60	63.40	62.90	38.00	66.50
65(75)	130.00	75.40	74.90	44.00	70.5
80(90)	147.50	90.50	89.90	51.50	82
100(110)	173.00	110.60	109.90	61.50	95

FEMALE ELBOW 90°

内丝 90°弯头



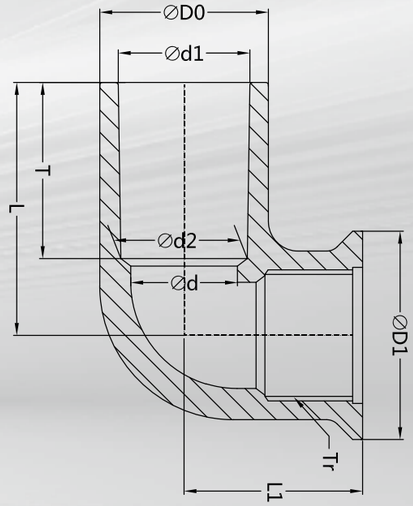

产品参数 SPECIFICATIONS

尺寸 Size	外形尺寸 Dimensions（mm）								
	D0	D1	d1	d2	d	T	L	L1	Tr 螺纹 PT
DN15*1/2"	29	34	20.48	19.57	18.49	32	43	32	1/2"
DN20*3/4"	33	42	25.54	24.49	22.39	37	51	36	3/4"
DN25*1"	40	52	32.7	31.52	28.41	42	59	42	1"

FEMALE
THREADED TEE

内丝正三通



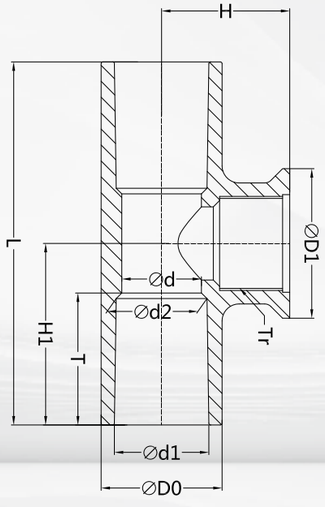

产品参数 SPECIFICATIONS

尺寸 Size	外形尺寸 Dimensions（mm）									
	D0	D1	d1	d2	d	T	H1	L	H	Tr 螺纹 PT
DN15*1/2"	29	34	22.49	21.6	18.5	30.5	41	86	32	1/2"
DN20*3/4"	33	42	26.54	25.51	22.4	35.5	53	102	36	3/4"
DN25*1"	40	52	32.7	31.52	28.41	40.5	59	118	42	1"

ECCENTRIC REDUCER

偏心异径接头



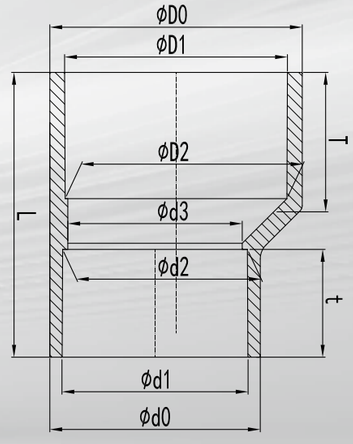

产品参数 SPECIFICATIONS

尺寸 Size DN（De）	外形尺寸 Dimensions（mm）									
	D0	D1	D2	d0	d1	d2	d3	t	T	L
25*15(32*20)	39.90	32.30	31.90	26.30	20.30	19.95	18.00	16.20	22.20	53.50
32*20(40*25)	47.90	40.35	39.90	31.80	25.30	24.95	23.00	18.70	26.20	68.00
40*15(50*20)	58.10	50.35	49.90	26.30	20.30	19.95	18.00	16.20	31.20	81.50
40*20(50*25)	58.10	50.35	49.90	31.80	25.30	24.95	23.00	18.70	31.20	78.50
40*25(50*32)	58.10	50.35	49.90	39.90	32.30	31.90	30.00	22.20	31.20	74.00
50*25(63*32)	73.10	63.40	62.90	39.90	32.30	31.90	30.00	22.20	37.70	96.00
50*32(63*40)	73.10	63.40	62.90	49.70	40.35	39.90	38.00	26.20	37.70	92.00
50*40(63*50)	73.10	63.40	62.90	58.10	50.35	49.90	48.00	31.20	37.70	86.75
65*25(75*32)	85.35	75.40	74.90	39.90	32.30	31.90	30.00	22.20	43.70	115.00
65*40(75*40)	85.35	75.40	74.90	58.10	50.35	49.90	48.00	31.20	43.70	105.70
65*50(75*63)	85.35	75.40	74.90	73.10	63.40	62.90	61.00	37.70	43.70	97.20
80*32(90*40)	102.40	90.50	89.90	49.70	40.35	39.90	38.00	26.20	51.20	135.50
80*40(90*50)	102.40	90.50	89.90	58.10	50.35	49.90	48.00	31.20	51.20	130.20
80*50(90*63)	102.40	90.50	89.90	73.10	63.40	62.90	61.00	37.70	51.20	121.70
80*65(90*75)	102.40	90.50	89.90	85.35	75.40	74.90	70.90	43.70	51.20	115.50
100*32(110*40)	124.40	110.60	109.90	49.70	40.35	39.90	38.00	26.20	61.20	168.50
100*40(110*50)	124.40	110.60	109.90	58.10	50.35	49.90	48.00	31.20	61.20	162.75
100*50(110*63)	124.40	110.60	109.90	73.10	63.40	62.90	61.00	37.70	61.20	154.20
100*65(110*75)	124.40	110.60	109.90	85.35	75.40	74.90	70.90	43.70	61.20	148.00
100*80(110*90)	124.40	110.60	109.90	102.40	90.50	89.90	85.90	51.20	61.20	138.50
125*50(140*63)	158.60	140.75	139.90	73.10	63.40	62.90	61.00	68.70	76.20	203.40
125*65(140*75)	158.60	140.75	139.90	85.35	75.35	74.90	70.90	31.20	76.20	197.20
125*80(140*90)	158.60	140.75	139.90	102.40	90.50	89.90	85.90	37.70	76.20	187.65
125*100(140*110)	158.60	140.75	139.90	124.40	110.60	109.90	103.90	43.70	76.20	175.60
150*65(160*75)	180.60	160.70	159.90	85.35	75.35	74.90	70.90	76.20	87.00	230.70
150*80(160*90)	180.60	160.70	159.90	102.40	90.50	89.90	85.90	37.70	87.00	221.20
150*100(160*110)	180.60	160.70	159.90	124.40	110.60	109.90	103.90	43.70	87.00	209.10
200*80(225*90)	259.40	226.20	224.90	102.40	90.50	89.90	85.90	37.70	118.70	328.00
200*100(225*110)	259.40	226.20	224.90	124.40	110.60	109.90	103.90	43.70	118.70	315.90
200*125(225*140)	259.40	226.20	224.90	158.60	140.75	139.90	125.20	76.20	118.70	296.75
200*150(225*160)	259.40	226.20	224.90	180.60	160.80	159.90	153.90	86.20	118.70	284.70

Y-FILTER

Y 型过滤器



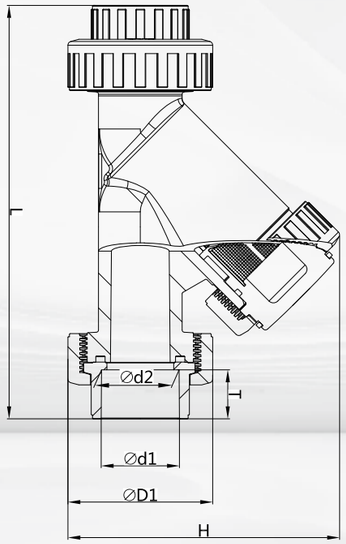

产品参数 SPECIFICATIONS

可选配 20 目滤网或 40 目滤网
Optional 20 mesh filter or 40 mesh filter

尺寸 Size DN（De）	外形尺寸 Dimensions（mm）					
	D1	d1	d2	T	L	H
15(20)	47.00	20.30	19.95	17.00	176.50	90.00
20(25)	53.90	25.30	24.95	19.50	203.80	104.10
25(32)	67.00	32.30	31.90	23.00	220.20	126.50
32(40)	78.50	40.35	39.90	27.00	247.50	145.00
40(50)	93.00	50.35	49.90	31.50	267.00	175.00
50(63)	110.60	63.40	62.90	38.50	313.20	204.50
65(75)	130.00	75.40	74.90	44.50	415.20	253.60
80(90)	147.50	90.50	89.90	52.00	452.50	291.30
100(110)	173.00	110.60	109.90	62.00	492.00	334.50

BUSHING

变径（补芯）

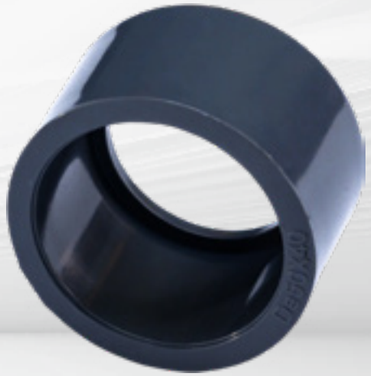

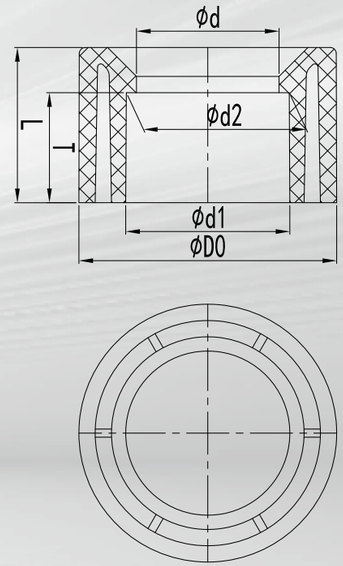

产品参数 SPECIFICATIONS

尺寸 Size DN（De）	外形尺寸 Dimensions（mm）					
	D0	d1	d2	d	T	L
20X15(25*20)	25.00	20.30	19.95	16.00	17.00	19.20
25X15(32*20)	32.00	20.30	19.95	16.00	17.00	22.20
25X20(32*25)	32.00	25.30	24.95	21.00	19.50	22.20
32X15(40*20)	40.00	20.30	19.95	16.00	17.00	26.30
32X20(40*25)	40.00	25.30	24.95	21.00	19.50	26.30
32X25(40*32)	40.00	32.30	31.90	27.50	23.00	26.30
40X15(50*20)	50.00	20.30	19.95	16.00	17.00	31.20
40X20(50*25)	50.00	25.30	24.95	21.00	19.50	31.20
40X25(50*32)	50.00	32.30	31.90	27.50	23.00	31.20
40X32(50*40)	50.00	40.35	39.90	35.00	27.00	31.20
50X15(63*20)	63.00	20.30	19.95	16.00	17.00	38.10
50X20(63*25)	63.00	25.30	24.95	21.00	19.50	38.10
50X25(63*32)	63.00	32.30	31.90	27.50	23.00	38.10
50X32(63*40)	63.00	40.35	39.90	35.00	27.00	38.10
50X40(63*50)	63.00	50.35	49.90	45.00	32.00	38.10
65X20(75*25)	75.00	25.30	24.95	21.00	19.50	44.10
65X25(75*32)	75.00	32.30	31.90	27.50	23.00	44.10

尺寸 Size DN（De）	外形尺寸 Dimensions（mm）					
	D0	d1	d2	d	T	L
65X32(75*40)	75.00	40.35	39.90	35.00	27.00	44.10
65X40(75*50)	75.00	50.35	49.90	45.00	32.00	44.10
65X50(75*63)	75.00	63.40	62.90	56.00	38.50	44.10
80X25(90*32)	90.00	32.30	31.90	27.50	23.00	51.00
80X32(90*40)	90.00	40.35	39.90	35.00	27.00	51.00
80X40(90*50)	90.00	50.35	49.90	45.00	32.00	51.00
80X50(90*63)	90.00	63.40	62.90	56.00	38.50	51.00
80X65(90*75)	90.00	75.40	74.90	67.00	44.50	51.00
100X40(110*50)	110.00	50.35	49.90	45.00	32.00	61.00
100X50(110*63)	110.00	63.40	62.90	56.00	38.50	61.00
100X65(110*75)	110.00	75.40	74.90	67.00	44.50	61.00
100X80(110*90)	110.00	90.50	89.90	80.50	52.00	61.00
De125*110	125.00	110.40	109.90	102.00	62.00	68.70
125X50(140*63)	140.00	63.40	62.90	102.00	62.00	77.00
125X65(140*75)	140.00	75.40	74.90	117.00	68.70	76.20
125X80(140*90)	140.00	90.50	89.90	56.00	38.50	76.20
125X100(140*110)	140.00	110.60	109.90	67.00	44.50	76.20
De140*125	140.00	125.70	124.90	80.50	52.00	76.20
150X50(160*63)	160.00	63.40	62.90	96.00	62.00	86.00
150X65(160*75)	160.00	75.40	74.90	130.00	77.00	86.00
150X80(160*90)	160.00	90.50	89.90	56.00	38.50	86.00
150X100(160*110)	160.00	110.60	109.90	67.00	44.50	86.00
150X125(160*140)	160.00	125.70	139.90	80.50	52.00	86.00
De180*160	180.00	160.80	159.90	150.90	86.20	96.00
De200*160	200.00	160.80	159.90	151.50	85.50	106.50
De200*180	200.00	180.90	179.90	169.70	96.00	106.20
200X100(225*110)	225.00	110.60	109.90	96.00	62.00	118.70
200X125(225*140)	225.00	140.75	139.90	130.00	77.00	118.70
200X150(225*160)	225.00	160.80	159.90	150.50	85.50	118.70
De225*200	225.00	201.00	199.90	188.80	106.20	118.70
De250*110	250.00	110.60	109.90	96.00	62.00	131.20
De250*160	250.00	160.80	159.90	150.50	85.50	131.20
De250*200	250.00	201.00	199.90	188.80	106.20	131.20
De250*225	250.00	226.20	224.90	210.80	118.70	131.20
250X200(280*225)	280.00	226.20	224.90	208.80	118.70	146.20
300X100(315*110)	315.00	110.60	109.90	96.00	62.00	163.70
300X150(315*160)	315.00	160.80	159.90	150.50	85.50	163.70
De315*200	315.00	201.00	199.90	188.80	106.20	163.70
300X200(315*225)	315.00	226.20	224.90	210.80	118.70	163.70
De315*250	315.00	251.15	249.90	239.00	131.20	163.70
300X250(315*280)	315.00	281.50	279.90	263.50	146.20	163.70
De355*200	355.00	201.00	199.90	188.80	106.20	183.70
350X200(355*225)	355.00	226.20	224.90	210.80	118.70	183.70
De355*250	355.00	251.15	249.90	239.00	131.20	183.70
350X300(355*315)	355.00	316.55	314.90	305.00	163.70	183.70
De400*200	400.00	201.00	199.90	188.80	106.20	206.20
400X200(400*225)	400.00	226.20	224.90	210.80	118.70	206.20
De400*250	400.00	251.15	249.90	239.00	131.20	206.20
400X300(400*315)	400.00	316.60	314.90	305.00	163.70	206.20
400X350(400*355)	400.00	356.70	354.90	345.00	183.70	206.20

TANK ADAPTOR (SOCKET)

水箱接头（直口）



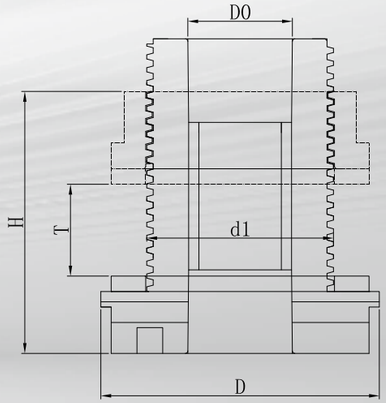

产品参数 SPECIFICATIONS

尺寸 Size DN（De）	外形尺寸 Dimensions（mm）					
	D0	d1	建议开孔 Recommended hole diameter	T（可夹范围） T(Clamping range)	D	H
15(20)	20.3	38.0	38	1-28mm	54	61
20(25)	25.3	42.5	45	1-30mm	60	65
25(32)	32.3	52.0	55	1-32mm	69	67
32(40)	40.4	61.5	65	1-36mm	84	72
40(50)	50.4	71.6	75	1-37mm	92	76
50(63)	63.4	86.0	90	1-45mm	108	84
65(75)	72.2	93.4	95	1-37mm	115	92
80(90)	85.0	110.8	115	1-38mm	135	96
100(110)	110.1	134.8	135	1-46mm	158	104

TANK ADAPTOR (THREADED)

水箱接头（丝口）

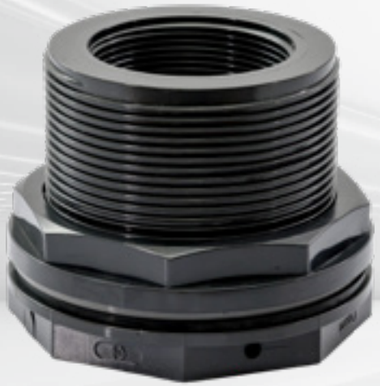

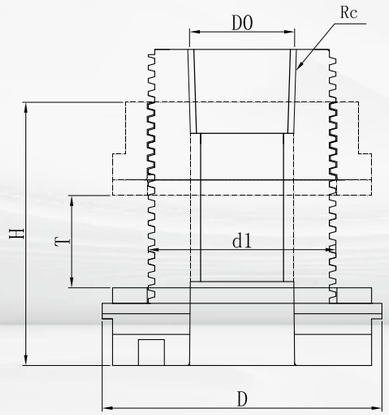

产品参数 SPECIFICATIONS

尺寸 Size DN（De）	外形尺寸 Dimensions（mm）						RC
	D0	d1	建议开孔 Recommended hole diameter	T（可夹范围） T(Clamping range)	D	H	
15(20)	18.6	38.0	38	1-28mm	54	61	1/2"
20(25)	24.1	42.5	45	1-30mm	60	65	3/4"
25(32)	30.3	52.0	55	1-32mm	69	67	1"
32(40)	39.0	61.5	65	1-36mm	84	72	1-1/4"
40(50)	44.8	71.6	75	1-37mm	92	76	1-1/2"
50(63)	56.7	86.0	90	1-45mm	108	84	2"
65(75)	72.2	93.4	95	1-37mm	115	92	2-1/2"
80(90)	85.0	110.8	115	1-38mm	135	96	3"
100(110)	110.1	134.8	135	1-46mm	158	104	4"

TANK ADAPTOR (UNION TYPE)

水箱接头（由令式）



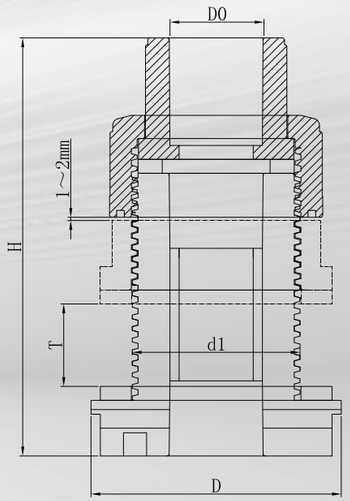

产品参数 SPECIFICATIONS

尺寸 Size DN（De）	外形尺寸 Dimensions（mm）					
	D0	d1	建议开孔 Recommended hole diameter	T（可夹范围） T(Clamping range)	D	H
15(20)	20.3	38.0	38	1-14mm	54	90
20(25)	25.3	42.5	45	1-15mm	60	98
25(32)	32.3	52.0	55	1-15mm	69	103
32(40)	40.4	61.5	65	1-19mm	84	102
40(50)	50.4	71.6	75	1-17mm	92	119
50(63)	63.4	86.0	90	1-24mm	108	131

FLANGE GASKET, ETHYLENE PROPYLENE DIENE MONOMER (EPDM)

法兰垫，三元乙丙橡胶（EPDM）



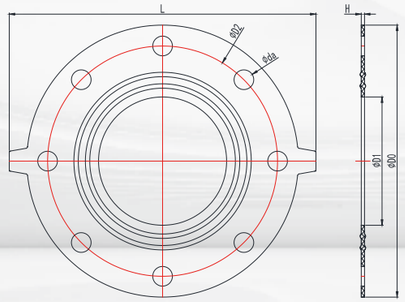

产品参数 SPECIFICATIONS

尺寸 Size DN（De）	外形尺寸 Dimensions（mm）						
	D0	D1	da	da	H	L	螺孔数 n Bolts No n
15(20)	93.00	16.00	65.00	14.00	3.00	115.00	4
20(25)	103.00	21.00	75.00	14.00	3.00	125.00	4
25(32)	113.00	28.00	85.00	14.00	3.00	135.00	4
32(40)	138.00	36.00	100.00	18.00	3.00	160.00	4
40(50)	148.00	45.00	110.00	18.00	3.00	170.00	4
50(63)	163.00	57.00	125.00	18.00	3.00	185.00	4
65(75)	183.00	69.00	145.00	18.00	3.00	205.00	4
80(90)	198.00	83.00	160.00	18.00	3.00	220.00	8
100(110)	218.00	103.00	180.00	18.00	3.00	250.00	8
De125	248.00	117.00	210.00	18.00	3.00	280.00	8
125(140)	248.00	131.50	210.00	18.00	3.00	280.00	8
150(160)	283.00	151.00	240.00	22.00	3.00	315.00	8
De180	283.00	166.00	240.00	22.00	3.00	315.00	8
De200	338.00	190.00	295.00	22.00	3.00	370.00	8
200(225)	338.00	203.00	295.00	22.00	3.00	370.00	8
De250	393.00	239.50	350.00	22.00	3.00	430.00	12
300(315)	443.00	302.00	400.00	22.00	3.00	485.00	12
350(355)	500.00	320.00	450.00	22.00	3.00	550.00	16
400(400)	550.00	350.00	500.00	22.00	3.00	590.00	16

REDUCING CROSS

异四通



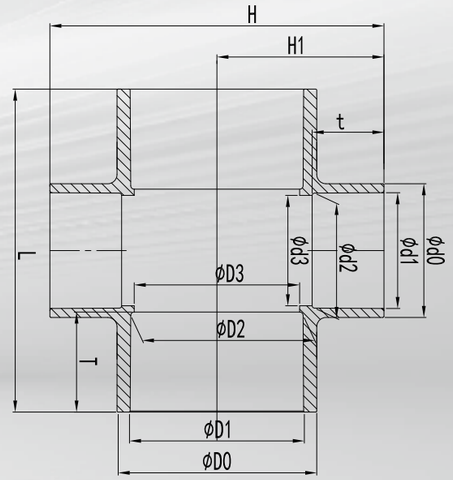

产品参数 SPECIFICATIONS

尺寸 Size DN（De）	外形尺寸 Dimensions（mm）												
	D0	D1	D2	D3	d0	d1	d2	d3	t	T	H1	H	L
65*20(De75*25)	86.84	75.45	74.95	71.93	31.82	25.22	25.00	23.00	18.70	43.50	62.12	124.24	140.20
65*25(De75*32)	86.84	75.45	74.95	71.93	38.85	32.24	32.00	30.28	22.20	43.50	65.62	131.24	140.20
65*40(De75*50)	86.84	75.45	74.95	71.93	58.13	50.33	50.00	48.00	31.20	43.50	72.62	145.24	140.20
80*25(De90*32)	104.48	90.47	89.95	86.93	38.85	32.24	32.00	30.28	22.20	51.20	71.50	143.00	158.40
80*40(De90*50)	104.48	90.47	89.95	86.93	58.13	50.33	50.00	48.00	31.20	51.20	80.50	161.00	158.40
80*50(De90*63)	104.48	90.47	89.95	86.93	73.14	63.34	63.00	61.34	37.70	51.20	85.00	170.00	197.00
100*25(De110*32)	127.40	110.42	109.93	107.80	38.85	32.24	32.00	30.28	22.20	61.20	81.50	163.00	192.40
100*50(De110*63)	127.40	110.42	109.93	107.80	73.14	63.34	63.00	61.34	37.70	61.20	97.00	194.00	192.40
125*40(De140*50)	158.57	140.57	139.90	135.90	58.13	50.33	50.00	48.00	31.20	76.20	108.00	216.00	208.45
125*50(De140*63)	158.57	140.57	139.90	135.90	73.14	63.34	63.00	61.34	37.70	76.20	114.50	229.00	221.45
150*50(De160*63)	184.60	160.62	159.88	156.80	73.14	63.34	63.00	61.34	37.70	86.20	124.50	249.00	287.95
150*100(De160*110)	184.60	160.62	159.88	156.80	127.40	110.42	109.93	107.80	61.20	86.20	148.00	296.00	287.95
De200*110	230.50	200.88	199.88	195.85	127.40	110.42	109.93	107.80	61.20	106.20	173.50	347.00	332.22
200*100(De225*110)	259.50	226.20	224.85	220.50	127.40	110.42	109.93	107.80	61.20	118.70	186.50	373.00	357.25
300*150(De315*160)	354.50	316.55	315.05	311.00	184.60	160.62	159.88	156.80	86.20	163.70	256.00	512.00	536.25
300*200(De315*225)	354.50	316.55	315.05	311.00	259.40	226.20	224.85	220.50	118.70	163.70	280.50	561.00	560.25
300*200(De315*225)	354.50	316.55	315.05	311.00	259.40	226.20	224.85	220.50	118.70	163.70	280.50	561.00	560.25