ZenithPura

苏州新鼎汇环保科技有限公司

SUZHOU XINDINGHUI ENVIRONMENTAL PROTECTION TECHNOLOGY CO., LTD.

地址：江苏省苏州市相城区元和街道宣公路588号元和塘科技文化研发社区1号楼5楼550室

ADD: Room 550, 5th Floor, Building 1, Yuanhetang Science and Technology Culture R&D Community, No. 588 Xuangong Road, Yuanhe Street, Xiangcheng District, Suzhou City, Jiangsu Province

TEL: +86 13913135613　E-mail：sunny@zenithpura.com　www.zenithpura.com

5芯全塑精密过滤器/Cartridge Filters (5 rounds)

CE certificate

5芯过滤器外壳采用PP/PVDF为原料，具有通量大、使用寿命长，可广泛运用于污水及废水回用，海水淡化，苦咸水处理，化工酸碱液体过滤，电镀，泳池温泉水过滤等领域。

The housing of the 5-cartridge filter uses PP/PVDF as raw material .Can be widely used sewage and Wastewater reuse,Desalination, Brackish Water,Acid and alkali liquid filtration in Chemical industry , Electroplating indust,swimming pool, hot spring water filtration and other fields. It is characterwith high flow, long working life and good operation of complex liquid.



◆ **专利产品** Patented product

◆ **耐高温** Hight temperature resistant

◆ **耐酸碱** Acid & alkai resistant

◆ **耐有机溶剂** Organic solvents resistant

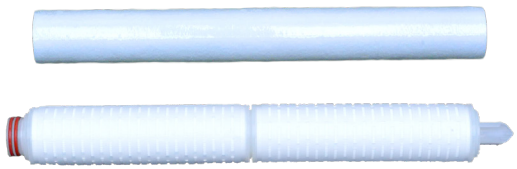

本产品获得国家实用新型专利证书，专利号为：ZL2025219357226

已通过0-1.0Mpa10万次循环疲劳测试。

It has got the utility model patent,which is issued by the state intellectual property office of the P.R.C. The patent NO is: ZL2025219357226

It has achieved 0-1.0 MPa 100,000 times recycle fatigue test successfully.

型号 Type	材质 Material	滤芯尺寸 Element size	进水高度 Hight of inlet (mm)	出水高度 Hight of outlet (mm)	进出水口 In/Out	排污口 Drainer	最大工作压力Max pressure	参考流量 Reference flow (T/H)
HPCF-5DC3-N	PP/PVDF	30"	1050	155	法兰FLG: DN50/ ANSI2"	1/2" female thread	1.0MPa (150PSI)	5.5-12
HPCF-5DC4-N		40"	1310					7.5-15

Note:

标配PP隔膜压力表及取样阀。

Equipped with a PP diaphragm pressure gauge and a vent valve.

5芯全塑精密过滤器/Cartridge Filters (5 rounds)

CE certificate

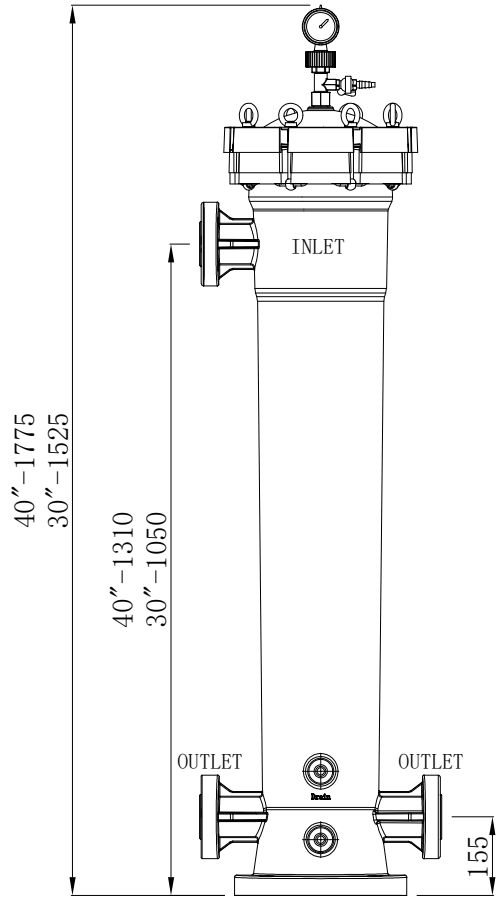

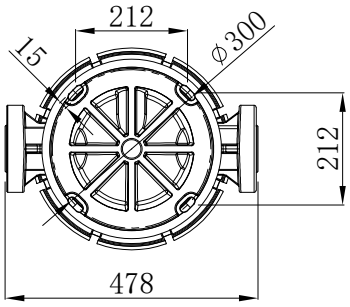

底座定位图
Pedestal Location

产品优势/Product Merits

1、产品为全新PP/PVDF过滤器，一体成型、耐压耐用。
2、整体壁厚、结构坚固、安全可靠、安装简捷、无任何焊接处。
3、特殊的PP/PVDF材质能用于大部份化学药液过滤，对大多数化学品具有抗腐蚀性。
4、标准的法兰螺栓孔距多功能，可配国标、美标、日标、德标法兰、易于安装，避免了易漏易裂的传统管道焊接与螺纹连接。
5、密封圈为氟橡胶、硬度合适、适合较大范围的酸碱药液，从而减少配件耗材，降低耗材成本。
6、吊环螺丝锁上盖的设计，能满足在狭小的空间方便打开和锁紧桶盖，更换滤芯方便快捷。
7、耐压高：过滤器耐压可达到1.0MPa。
8、耐温高：PP材质过滤器耐温可达85℃;PVDF材质过滤器耐温可达100℃；

1.The product is a new PP/PVDF filter, designed with a one-piece construction for high pressure resistance and durability.
2.Robust construction with uniform wall thickness, easy installation, and no welds.
3.Chemically resistant material suitable for filtering a wide range of liquids.
4.Multi-standard flange holes enable flexible installation without welded leaks.
5.Fluororubber sealing gasket resists acids and alkalis, reducing consumable costs.
6.Lifting ring screw-lock cover allows easy cartridge replacement in tight spaces.
7.High pressure resistance: with a rating of 1.0 MPa.
8.Temperature rating: 85℃ for PP, 100℃ for PVDF.

CE certificate

大滤芯过滤器采用采用PP/PVDF为原料，具有通量大、使用寿命长，可广泛运用于污水及废水回用，海水淡化，苦咸水处理，化工酸碱液体过滤，电镀，泳池温泉水过滤等领域。

High Flow series filter uses PP/PVDF as raw material .Can be widely used sewage and Wastewater reuse,Desalination, Brackish Water,Acid and alkali liquid filtration in Chemical industry , Electroplating indust,swimming pool, hot spring water filtration and other fields. It is characterwith high flow, long working life and good operation of complex liquid.



◆ 专利产品
Patented product

◆ 耐高温
Hight temperature resistant

◆ 耐酸碱
Acid & alkai resistant

◆ 耐有机溶剂
Organic solvents resistant



本产品获得国家实用新型专利证书，专利号为：ZL2025219357226

已通过0-1.0Mpa10万次循环疲劳测试。

It has got the utility model patent,which is issued by the state intellectual property office of the P.R.C. The patent NO is: ZL2025219357226

It has achieved 0-1.0 MPa 100,000 times recycle fatigue test successfully.

型号 Type	材质 Material	滤芯尺寸 Element size	进水高度 Hight of inlet (mm)	出水高度 Hight of outlet (mm)	进出水口 In/Out	排污口 Drainer	最大工作压力 Max pressure	参考流量 Reference flow (T/H)
PF30-PL	PP/PVDF	30"	1050	155	法兰FLG: DN50/ANSI2" DN80/ANSI3"	1/2" female thread	1.0MPa(150PSI)	15-25
PF30-PK								
PF30-M								
PF40-PL		40"	1310					20-30
PF40-PK								
PF40-M								

Note:

标配PP隔膜压力表及取样阀。

Equipped with a PP diaphragm pressure gauge and a vent valve.

CE certificate

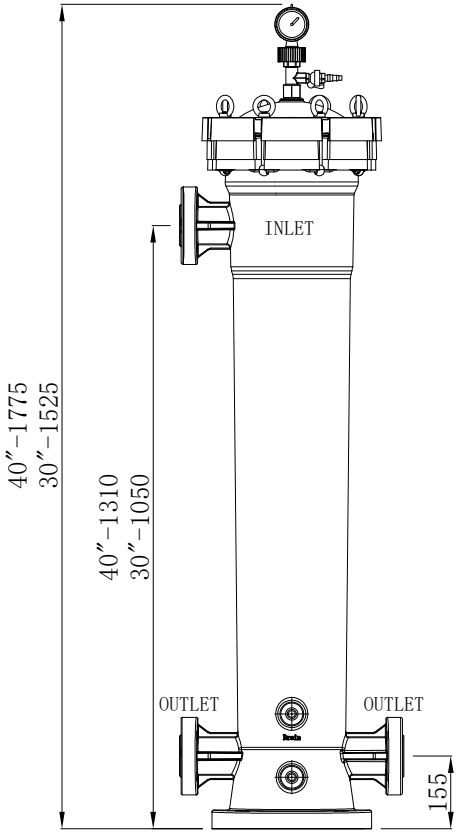

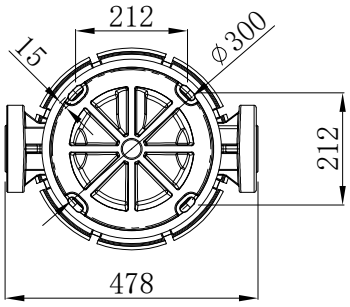

底座定位图
Pedestal Location

产品优势/Product Merits

1、产品为全新PP/PVDF过滤器，一体成型、耐压耐用。
2、整体壁厚、结构坚固、安全可靠、安装简捷、无任何焊接处。
3、特殊的PP/PVDF材质能用于大部份化学药液过滤，对大多数化学品具有抗腐蚀性。
4、标准的法兰螺栓孔距多功能，可配国标、美标、日标、德标法兰、易于安装，避免了易漏易裂的传统管道焊接与螺纹连接。
5、密封圈为氟橡胶、硬度合适、适合较大范围的酸碱药液，从而减少配件耗材，降低耗材成本。
6、吊环螺丝锁上盖的设计，能满足在狭小的空间方便打开和锁紧桶盖，更换滤芯方便快捷。
7、耐压高：过滤器耐压可达到1.0MPa。
8、耐温高：PP材质过滤器耐温可达85℃;PVDF材质过滤器耐温可达100℃；

1.The product is a new PP/PVDF filter, designed with a one-piece construction for high pressure resistance and durability.
2.Robust construction with uniform wall thickness, easy installation, and no welds.
3.Chemically resistant material suitable for filtering a wide range of liquids.
4.Multi-standard flange holes enable flexible installation without welded leaks.
5.Fluororubber sealing gasket resists acids and alkalis, reducing consumable costs.
6.Lifting ring screw-lock cover allows easy cartridge replacement in tight spaces.
7.High pressure resistance: with a rating of 1.0 MPa.
8.Temperature rating: 85℃ for PP, 100℃ for PVDF.

CE certificate

全塑袋式过滤系统外壳采用PP/PVDF为原料，具有通量大、使用寿命长，可广泛运用于污水及废水回用，海水淡化，苦咸水处理，化工酸碱液体过滤，电镀，泳池温泉水过滤等领域。

Bag filter system is a new filter uses PP/PVDF as raw material .Can be widely used sewage and Wastewater reuse,Desalination, Brackish Water,Acid and alkali liquid filtration in Chemical industry , Electroplating indust,swimming pool, hot spring water filtration and other fields. It is characterwith high flow, long working life and good operation of complex liquid.



◆ **专利产品** Patented product

◆ **耐高温** Hight temperature resistant

◆ **耐酸碱** Acid & alkai resistant

◆ **耐有机溶剂** Organic solvents resistant



本产品获得国家实用新型专利证书，专利号为：ZL2025219357226

已通过0-1.0Mpa10万次循环疲劳测试。

It has got the utility model patent,which is issued by the state intellectual property office of the P.R.C. The patent NO is: ZL2025219357226

It has achieved 0-1.0 MPa 100,000 times recycle fatigue test successfully.

型号 Type	材质 Material	滤袋尺寸 Bag size (mm)	进水高度 Hight of inlet (mm)	出水高度 Hight of outlet (mm)	进出水口 In/Out(mm)	排污口 Drainer	最大工作压力 Max pressure	参考流量 Reference flow (T/H)
HXP-BF-1-2-N	PP/PVDF	ϕ180mm-810mm	1050	155	法兰FLG: DN50/ ANSI2" DN80/ ANSI3"	1/2" female thread	1.0MPa (150PSI)	20-30

Note:

标配PP隔膜压力表及取样阀。

Equipped with a PP diaphragm pressure gauge and a vent valve.

CE certificate

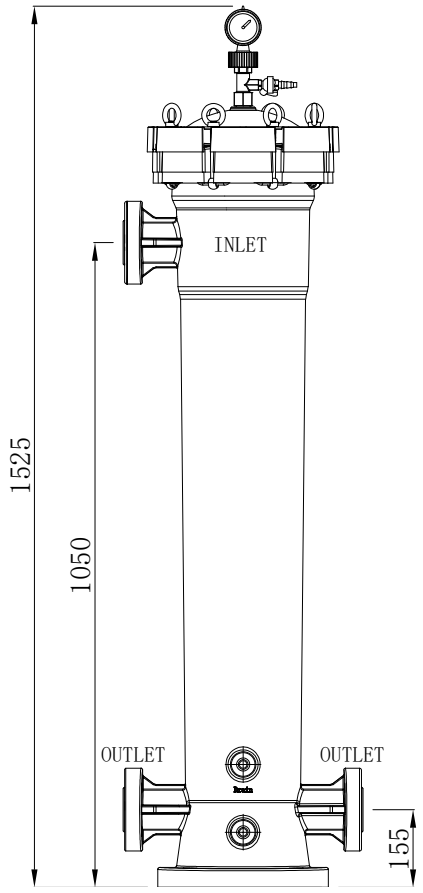

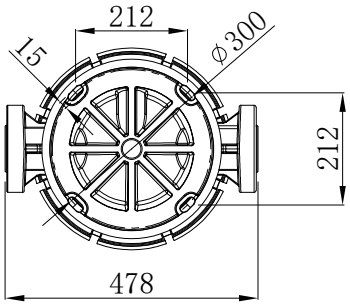

底座定位图
Pedestal Location

产品优势/Product Merits

1、产品为全新PP/PVDF过滤器，一体成型、耐压耐用。
2、整体壁厚、结构坚固、安全可靠、安装简捷、无任何焊接处。
3、特殊的PP/PVDF材质能用于大部份化学药液过滤，对大多数化学品具有抗腐蚀性。
4、标准的法兰螺栓孔距多功能，可配国标、美标、日标、德标法兰、易于安装，避免了易漏易裂的传统管道焊接与螺纹连接。
5、密封圈为氟橡胶、硬度合适、适合较大范围的酸碱药液，从而减少配件耗材，降低耗材成本。
6、吊环螺丝锁上盖的设计，能满足在狭小的空间方便打开和锁紧桶盖，更换滤芯方便快捷。
7、耐压高：过滤器耐压可达到1.0MPa。
8、耐温高：PP材质过滤器耐温可达85℃;PVDF材质过滤器耐温可达100℃；

1.The product is a new PP/PVDF filter, designed with a one-piece construction for high pressure resistance and durability.
2.Robust construction with uniform wall thickness, easy installation, and no welds.
3.Chemically resistant material suitable for filtering a wide range of liquids.
4.Multi-standard flange holes enable flexible installation without welded leaks.
5.Fluororubber sealing gasket resists acids and alkalis, reducing consumable costs.
6.Lifting ring screw-lock cover allows easy cartridge replacement in tight spaces.
7.High pressure resistance: with a rating of 1.0 MPa.
8.Temperature rating: 85℃ for PP, 100℃ for PVDF.

CE certificate

三袋式/四芯式大通量滤芯过滤器外壳采用PP/PVDF为原料，具有通量大、使用寿命长，可广泛运用于污水及废水回用，海水淡化，苦咸水处理，化工酸碱液体过滤，电镀，泳池温泉水过滤等领域。

The housing of the 3-bag (4-cartridge high-flow) filter uses PP/PVDF as raw material .Can be widely used sewage and Wastewater reuse,Desalination, Brackish Water,Acid and alkali liquid filtration in Chemical industry , Electroplating indust,swimming pool, hot spring water filtration and other fields. It is characterwith high flow, long working life and good operation of complex liquid.



◆ 专利产品
Patented product

◆ 耐高温
Hight temperature resistant

◆ 耐酸碱
Acid & alkai resistant

◆ 耐有机溶剂
Organic solvents resistant



本产品获得国家实用新型专利证书，专利号为：ZL2025219357226

已通过0-1.0Mpa10万次循环疲劳测试。

It has got the utility model patent,which is issued by the state intellectual property office of the P.R.C. The patent NO is:ZL2025219357226

It has achieved 0-1.0 MPa 100,000 times recycle fatigue test successfully.

型号 Type	材质 Material	滤元尺寸 Element size	进水高度 Hight of inlet (mm)	出水高度 Hight of outlet (mm)	进出水口 In/Out(mm)	排污口 Drainer	最大工作压力 Max pressure	参考流量 Reference flow (T/H)
HPCF-23DC4-N	PP/PVDF	ϕ63mm-H1014mm	1280	260	法兰FLG: DN150/ ANSI6"	1/2" female thread	1.0MPa (150PSI)	23-69
HXP-BF-3-2-N		ϕ180mm-H810mm						60-90
PF40-4-PL		40"PL						80-120
PF40-4-PK		40"PK						
PF40-4-M		40"M						

Note:

标配PP隔膜压力表及取样阀。

Equipped with a PP diaphragm pressure gauge and a vent valve.

CE certificate

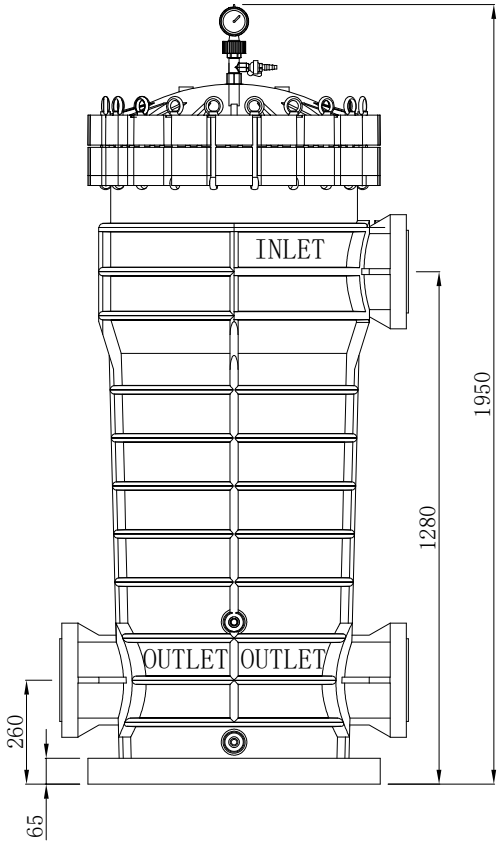

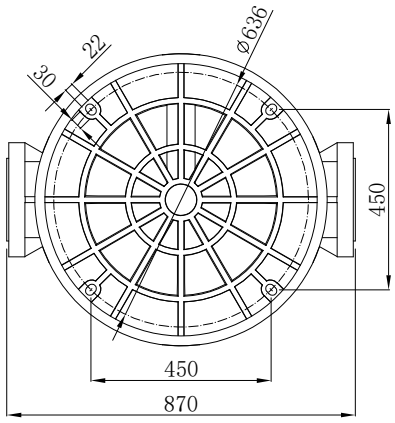

底座定位图
Pedestal Location

产品优势/Product Merits

1、产品为全新PP/PVDF过滤器，一体成型、耐压耐用。
2、整体壁厚、结构坚固、安全可靠、安装简捷、无任何焊接处。
3、特殊的PP/PVDF材质能用于大部份化学药液过滤，对大多数化学品具有抗腐蚀性。
4、标准的法兰螺栓孔距多功能，可配国标、美标、日标、德标法兰、易于安装，避免了易漏易裂的传统管道焊接与螺纹连接。
5、密封圈为氟橡胶、硬度合适、适合较大范围的酸碱药液，从而减少配件耗材，降低耗材成本。
6、吊环螺丝锁上盖的设计，能满足在狭小的空间方便打开和锁紧桶盖，更换滤芯方便快捷。
7、耐压高：过滤器耐压可达到1.0MPa。
8、耐温高：PP材质过滤器耐温可达85℃;PVDF材质过滤器耐温可达100℃；

1.The product is a new PP/PVDF filter, designed with a one-piece construction for high pressure resistance and durability.
2.Robust construction with uniform wall thickness, easy installation, and no welds.
3.Chemically resistant material suitable for filtering a wide range of liquids.
4.Multi-standard flange holes enable flexible installation without welded leaks.
5.Fluororubber sealing gasket resists acids and alkalis, reducing consumable costs.
6.Lifting ring screw-lock cover allows easy cartridge replacement in tight spaces.
7.High pressure resistance: with a rating of 1.0 MPa.
8.Temperature rating: 85℃ for PP, 100℃ for PVDF.

CE certificate

耐腐蚀/耐酸碱

Corrosion resistance/acid and alkali resistance



滤芯式过滤器系列

Cartridge Filter Housings

◎ 全塑精密过滤器（3芯/5芯）

UPVC cartridge filter housings（3nos/5nos）

◎ 全塑精密过滤器（8芯/9芯）

UPVC cartridge filter housings（8nos/9nos）

◎ 玻璃钢精密过滤器（18芯）

FRP cartridge filter housings（18nos）

CE certificate

不同的螺栓形式和压力表可供选择
Different bolts and Pressure Gauge are available

全塑精密过滤器（3芯/5芯）/Cartridge Filters（3nos/5nos）


B-P1


B-P2


C-P1


C-P2

	型号系列 Type	螺栓形式 Bolts	密封材质 Sealing Material	压力表形式 Pressure Gauge
3芯/5芯（3nos/5nos）	B系列/B series	B2=SS304螺栓/SS304 B3=SS316螺栓/SS316	E=三元乙丙/EPDM S=硅橡胶/Silicon V=氟橡胶/Viton	P1=不锈钢压力表/SS Pressure Gauge P2=PP隔膜压力表/PP Pressure Gauge
	C系列/C series	C2=SS304螺栓/SS304 C3=SS316螺栓/SS316		

全塑精密过滤器（8芯/9芯）/Cartridge Filters（8nos/9nos）


B-P1


B-P2

	螺栓形式 Bolts	密封材质 Sealing Material	压力表形式 Pressure Gauge
8芯/9芯（8nos/9nos）	A=镀锌螺栓/Iron B=SS316螺栓/SS316	E=三元乙丙/EPDM S=硅橡胶/Silicon V=氟橡胶/Viton	P1=不锈钢压力表/SS Pressure Gauge P2=PP隔膜压力表/PP Pressure Gauge

CE certificate

滤芯过滤器(保安、精密过滤器)是一种高精度的过滤装置。产品主要用于前置处理，广泛用于纯水设备，海水淡化，苦咸水处理设备，酸碱性液体过滤等领域，也可用做家庭净水器使用。

HPCF catridge filter is a filter system wish high precision. It mainly used in pretreatment， can be widely used in pure water equipment， desalination,treatment of Brackish Water ， Acid and alkali liquid filtration and other fields， also it can acts as home water purification equipment.



Type: A



Type: B



Type: C



透明系列
Transparent Version

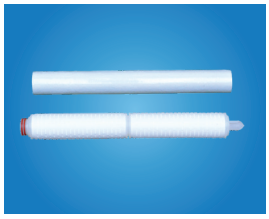

本产品获得国家实用新型专利证书，专利号为：ZL201821245100.0
获得国家发明专利证书，专利号为：200510049195X
已通过0-0.6Mpa打10万次循环疲劳测试。
It has got the utility model patent,which is issued by the state intellectual property office of the P.R.C. The patent NO is: ZL201821245100.0
It has got the patent of invention.
The patent NO is: 200510049495.X
It has achieved 0-0.6 MPa 100,000 times recycle fatigue test successfully.

型号 Type		材质 Material	尺寸 Siza	滤芯数量 Cartridges pcs	滤芯尺寸 Cartridges size	进出水口 In/Out(mm)	排污口 Drainer(mm)	最大工作压力 Max pressure	参考流量 Reference flow (T/H)	
HPCF-5DC1	HPCF-3DC1	UPVC	Ø225-H465	5/3	10"	DN40/ ANSI1.5" (W=365) DN50/ANSI2" (W=540)	DIN1/2" or ANSI1/2"	A=0.4MPA	2-2.5	1-1.5
HPCF-5DC2	HPCF-3DC2		Ø225-H715		20"				3.7-5	2.2-3
HPCF-5DC3	HPCF-3DC3		Ø225-H965		30"			B/C=0.6MPA	5.6-7.5	3.4-4.5
HPCF-5DC4	HPCF-3DC4		Ø225-H1215		40"				7.5-10	4.5-6

40" 滤芯 (5μm) : 1.5-2T/H

Note：

桶体内安装各种材质各种精度的内径为28-30mm； 外径为60-70mm的两端平压式滤芯（或标准222接头滤芯）5根或3根。

最高工作温度： 45 ℃， 顶盖上预留的排气阀及压力表安装孔的螺纹尺寸为： G1/4″ ，配公制压力表需要订购转接头。若订购PP隔膜压力表，请在下单时告知。

It can install all material; all precision's cartridge 5 PCS or 3 PCS, which I.D. is 28-30mm, O.D. is 60-70mm.

The highest working temperature is 45℃, The size of the two holes in the lid of the filter is G1/4″. If the thread of the pressure gauge is metric standard, should add an adaptor.If the pressure gauge needs to be equipped with a PP diaphragm, please note clearly on the order.

3芯/5芯全塑精密过滤器/Cartridge Filters (3 or 5 rounds)

CE certificate

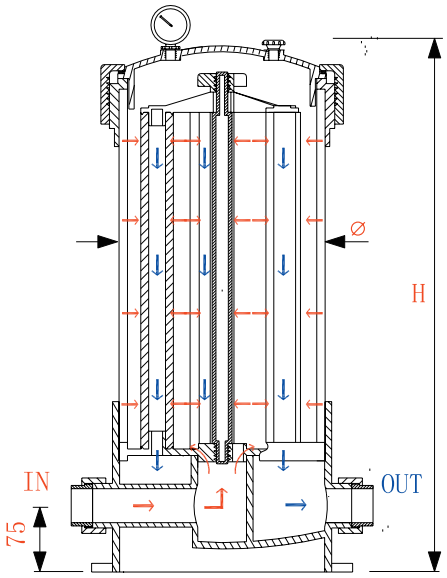

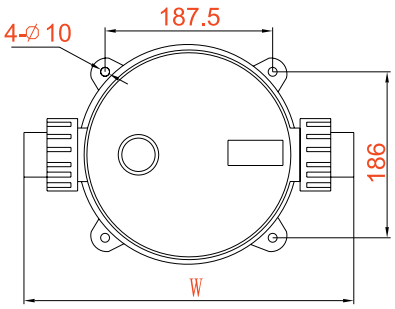

产品优势/Product Merits

1、本过滤器采用UPVC 材质，部件一次成型，标准化生产，更换、维修方便。

2、本过滤器进出水口在同一水平直线， 连接有1.5” 或2” 的由令接头，视觉美观、整齐。

3、过滤器布水采用从过滤器底部中心往上向四周均匀布水，滤芯受冲击阻力小；顶部装有排气阀，便于过滤器中空气排出。

4、过滤器底部系统与顶部滤芯定位压紧板均采用一体式设计，滤芯的安装并压紧既容易又可避免内漏现象。

5、A款过滤器封盖与本体连接采用宽螺纹连接密封，既确保过滤器完好的密封性能，又给更换滤芯的拆装带来了方便和快捷。 B 款过滤器采用吊环螺丝法兰式密封， 使过滤器能承受更大压力。

6、过滤器为UPVC 材质成型， 具有较强的耐腐蚀性，能用于不锈钢不能代替的化工行业，更能体现它的经济价值和实用价值。

1.All the parts of this series filters are made of UPVC material.

2.The inlet and outlet are in the same line, which connected with the pipe is adopt a 1.5” or a 2” union.

3.The distribution system of HPCF filters is distributed from bottom to top.Water is well-proportioned with small strike to cartridges and air is easy to be discharged.

4.The bottom system of HPCF filter is designed together as a whole with the top localizer & closure system.

Cartridges are easy to be installed, push down and closed, preventing leaking inside.

5.A series: The lid and the body are connected by a nut. Ensure a good seal performance.

B series: The lid and the body are connected using eyebolts flange method, ensure the filter can stand higher pressure.

6.HPCF filter is corrosion resistant, It can be used in SS-none-replace field .

CE certificate



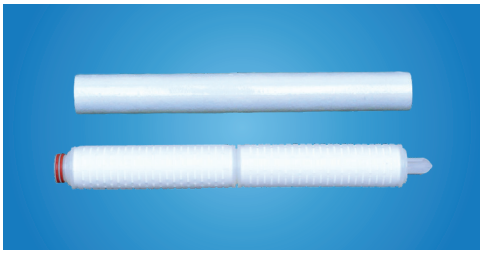

本产品获得国家实用新型专利证书，专利号为：ZL201821245100.0

获得国家发明专利证书，专利号为：200510049195X

已通过0-0.6Mpa打10万次循环疲劳测试。

It has got the utility model patent,which is issued by the state intellectual property office of the P.R.C. The patent NO is: ZL201821245100.0
It has got the patent of invention.
The patent NO is: 200510049495.X
It has achieved 0-0.6 MPa 100,000 times recycle fatigue test successfully.

型号 Type		材质 Material	尺寸 Siza	滤芯数量 Cartridges pcs	滤芯尺寸 Cartridges size	进出水口 In/Out (mm)	排污口 Drainer (mm)	最大工作压力 Max pressure	参考流量 Reference flow (T/H)	
HPCF-9DC2	HPCF-8DC2	UPVC	Ø315-H745	9/8	20"	DN80/ ANSI3"	DIN1/2" or ANSI1/2"	0.6MPA (86PSI)	6.7-9	6-8
HPCF-9DC3	HPCF-8DC3		Ø315-H995		30"				10-13.5	9-12
HPCF-9DC4	HPCF-8DC4		Ø315-H1245		40"				13.5-18	12-16

40" 滤芯 (5μm) : 1.5-2T/H

Note：

桶体内安装各种材质各种精度的内径为28-30mm； 外径为60-70mm的两端平压式滤芯（或标准222接头滤芯）9根或8根。

最高工作温度：45 ℃， 顶盖上预留的排气阀及压力表安装孔的螺纹尺寸为： G1/4″ ，配公制压力表需要订购转接头。若订购PP隔膜压力表，请在下单时告知。

It can install all material; all precision's cartridge 9 PCS or 8 PCS, which I.D. is 28-30mm, O.D. is 60-70mm.

The highest working temperature is 45℃, The size of the two holes in the lid of the filter is G1/4″. If the thread of the pressure gauge is metric standard, should add an adaptor.If the pressure gauge needs to be equipped with a PP diaphragm, please note clearly on the order.

CE certificate

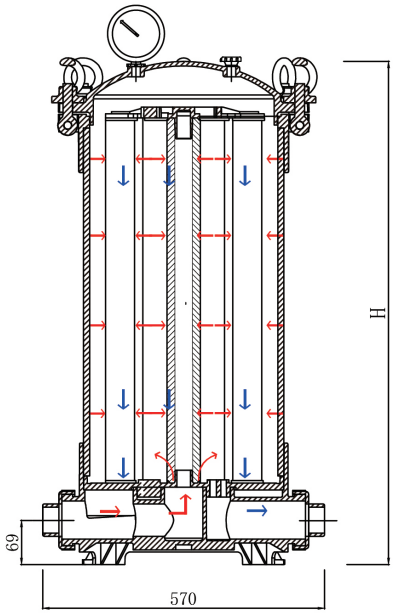

水流示意图
Flow Diagram

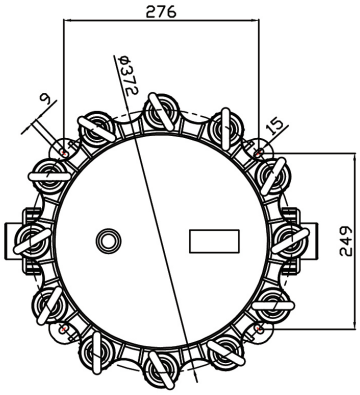

底座定位图
Pedestal Location

产品优势/Product Merits

1、过滤器采用UPVC 材质，部件一次成型，标准化生产，更换、维修方便。

2、过滤器进出水口在同一水平直线， 连接有3” 的由令接头，视觉美观、整齐。

3、过滤器布水采用从过滤器底部中心往上向四周均匀布水，滤芯受冲击阻力小；顶部装有排气阀，便于过滤器中空气排出。

4、过滤器底部系统与顶部滤芯定位压紧板均采用一体式设计，滤芯的安装并压紧既容易又可避免内漏现象。

5、过滤器封盖与本体连接采用吊环螺丝法兰式密封，既确保过滤器完好的密封性能，又给更换滤芯的拆装带来了方便和快捷且使过滤器能承受更大压力。

6、过滤器为UPVC 材质成型， 具有较强的耐腐蚀性，能用于不锈钢不能代替的化工行业，更能体现它的经济价值和实用价值。

1.All the parts of this series filters are made of UPVC material.

2.The inlet and outlet are in the same line, which connected with the pipe is adopt a 3” union.

3.The distribution system of HPCF filters is distributed from bottom to top.Water is well-proportioned with small strike to cartridges and air is easy to be discharged.

4.The bottom system of HPCF filter is designed together as a whole with the top localizer & closure system.

Cartridges are easy to be installed, push down and closed, preventing leaking inside.

5.The lid and the body are connected using eyebolts flange method, Ensure a good seal performance. and ensure the filter can stand higher pressure.

6.HPCF filter is corrosion resistant, It can be used in SS-none-replace field.

CE certificate



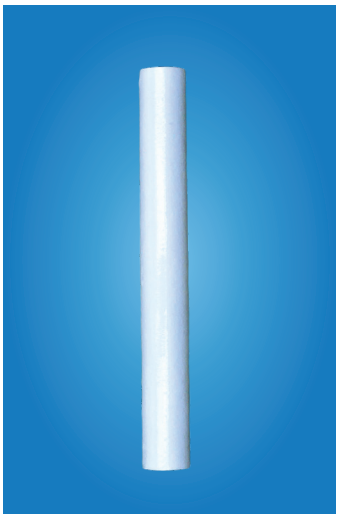

本产品获得国家发明专利证书
专利号为：ZL201510966133.9
已通过0-1.0MPa的10万次循环疲劳测试

It has got the patent of invention.
The patent No is;ZL201510966133.9
It has achieved 0-1.0MPa 100,000 times recycle fatigue test successfully.

型号 Type	材质 Material	尺寸 Siza	滤芯数量 Cartridges pcs	滤芯尺寸 Cartridges size	进出水口 In/Out (mm)	排污口 Drainer (mm)	最大工作压力Max pressure	参考流量 Reference flow (T/H)
HPCF-18DC4	FRP	Ø465-H1413	18	40"	4"coupling	1"socket	1.0MPA (150PSI)	27-36
HPCF-18DC5		Ø465-H1663		50"				32-40

40" 滤芯 (5μm) : 1.5-2T/H

Note：
桶体内安装各种材质各种精度的内径为28-30mm； 外径为60-70mm的两端平压式滤芯18根。
最高工作温度： 45 ℃

It can install all material; all precision's cartridge 18 PCS, which I.D. is 28-30mm, O.D. is 60-70mm.
The highest working temperature is 45℃.

CE certificate

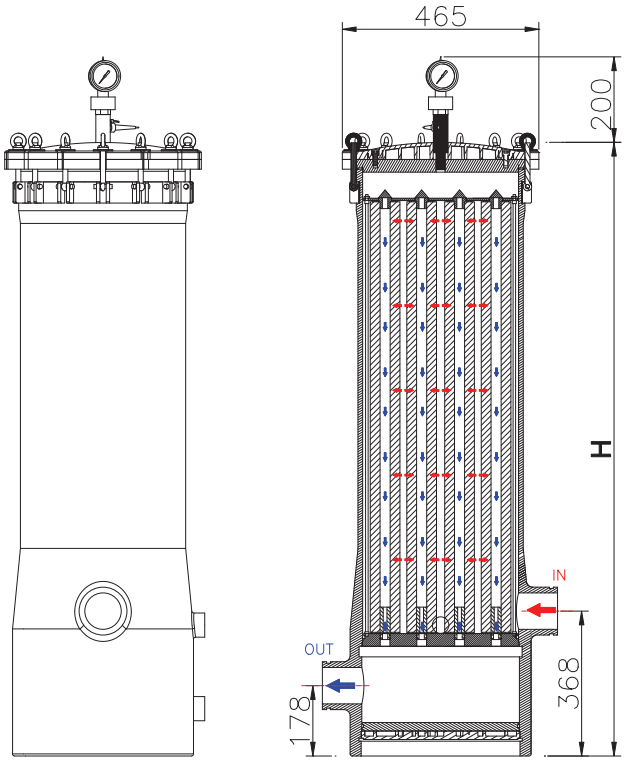

玻璃钢水流示意图
Flow Diagram

产品优势/Product Merits

1、过滤器采用FRP 材质，部件一次成型，标准化生产，更换、维修方便。
2、过滤器进出水口 连接有4"coupling，拆装方便，视觉美观、整齐。
3、过滤器采用上部进水，滤芯受冲击阻力小；顶部装有排气阀，便于过滤器中空气排出。
4、过滤器底部系统与顶部滤芯定位压紧板均采用一体式设计，滤芯的安装并压紧既容易又可避免内漏现象。
5、过滤器封盖与本体连接采用吊环螺丝法兰式密封，既确保过滤器完好的密封性能，又给更换滤芯的拆装带来了方便和快捷且使过滤器能承受更大压力。
6、过滤器为FRP 材质成型, 具有较强的耐腐蚀性，能用于不锈钢不能代替的化工行业及海水淡化领域。

1.All the parts of this series filters are made of FRP material.
2.The inlet and outlet , which connected with the pipe is adopt a 4" coupling.
3.The distribution system of HPCF filters is distributed from top.Water is well-proportioned with small strike to cartridges and air is easy to be discharged.
4.The bottom system of HPCF filter is designed together as a whole with the top localizer & closure system.Cartridges are easy to be installed, push down and closed, preventing leaking inside.
5.The lid and the body are connected using eyebolts flange method, Ensure a good seal performance. and ensure the filter can stand higher pressure.
6.HPCF filter is corrosion resistant, It can be used in SS-none-replace field, and seawater treatment field

CE certificate

PF型大通量过滤器具有通量大、使用寿命长，可广泛应用于污水与废水回用、海水淡化、苦咸水处理，酸碱性液体过滤，农业灌溉，泳池等领域。

PF filter system can be widely used sewage and wastewater reuse, desalination, Brackish Water，Acid and alkali liquid filtration Agricultural irrigation Swimming pool equipment and other fields. It is character with high flow, long working life and good operation of complex liquid.



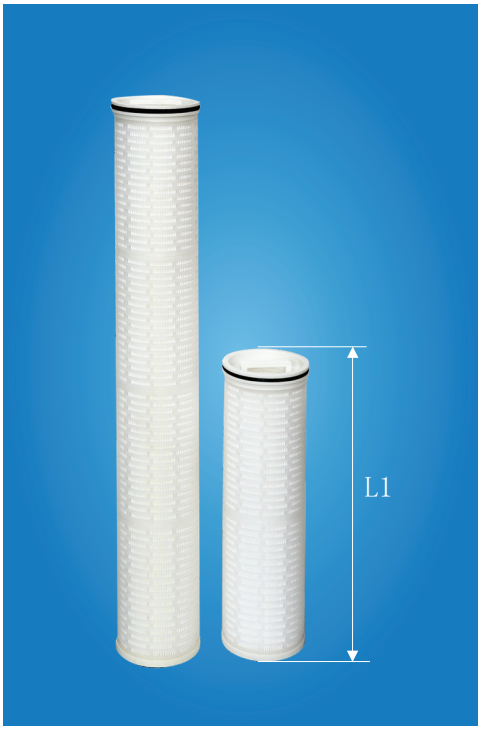

型号 Type	材质 Material	尺寸 Size(mm)	滤芯高度 L1(mm)	进水高度 L2(mm)	进出水口 In/Out(mm)	最大工作压力 Max pressure	参考流量 Reference flow (T/H)
PF20	UPVC	Ø225-H1070	525	905	FLG: DN50/ ANSI2”	0.7MPA(100PSI)	10-15
PF40		Ø225-H1560	1015	1395			15-20

Note:

桶体内放置大通量滤芯1只；

最高工作温度：45℃，排气孔、压力表安装孔螺纹尺寸为：G1/4" ,配公制压力表需要订购转接头。

若订购PP隔膜压力表，请在下单时告知。

It can install high flow cartridge one PCS.

The highest of working temperature is 45℃, The size of the two holes in the lid of the filter is G1/4"

If the thread of the pressure gauge is metric standard,should add an adaptor.

If the pressure gauge needs to be equipped with a PP diaphragm, please note clearly on the order.

CE certificate

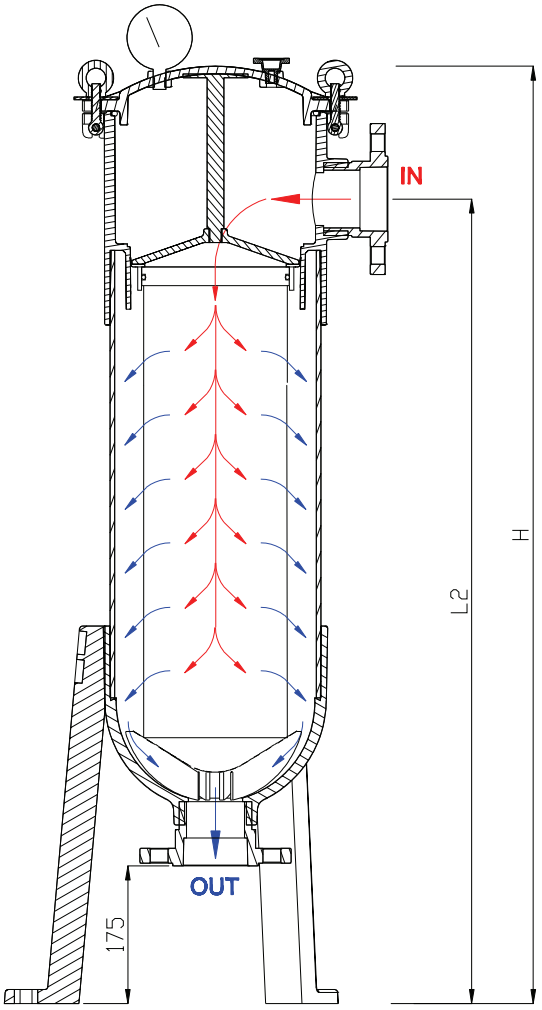

水流示意图
Flow Diagram

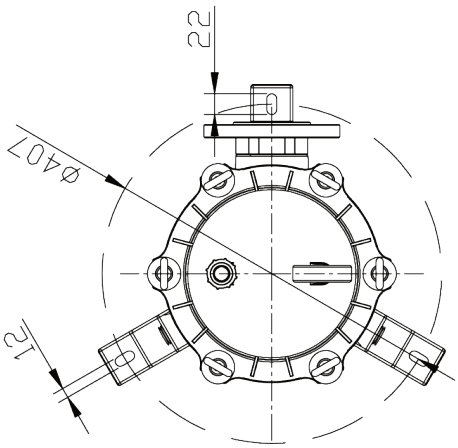

底座定位图
Pedestal Location

产品优势/Product Merits

1、 UPVC 材质的过滤容器耐腐蚀性强;能适用于不锈钢及碳钢不能进入的领域
2、单芯通量大，远远超过传统滤芯
3、使用寿命长，一般为普通滤芯的3-4倍以上
4、滤芯封闭端上的方便把手，让滤芯的更换变得轻松和快捷。

1、UPVC material has good corrosion resistant, so can suit for non-SS field.
2、The flow is more than other cartridges.
3、Long working life, more than 3 times than others.
4、Handle design make the cartridge replacement become easier.

CE certificate

大滤芯过滤器采用PP/PVDF为原料，具有通量大、使用寿命长，可广泛运用于污水及废水回用，海水淡化，苦咸水处理，化工酸碱液体过滤，电镀等领域。

High Flow series filter uses PP/PVDF as raw material .Can be widely used sewage and Wastewater reuse,Desalination, Brackish Water,Acid and alkali liquid filtration in Chemical industry , Electroplating indust and other fields. It is characterwith high flow, long working life and good operation of complex liquid.

- **专利产品** Patented product
- **耐酸碱** Acid & alkai resistant
- **耐高温** Hight temperature resistant
- **耐有机溶剂** Organic solvents resistance





本产品获得国家实用新型专利证书，专利号为：ZL201821245393. 2

已通过0-0.8Mpa打10万次循环疲劳测试。

It has got the utility model patent,which is issued by the state intellectual property office of the P.R.C. The patent NO is: ZL201821245393. 2

It has achieved 0-0.8 MPa 100,000 times recycle fatigue test successfully.

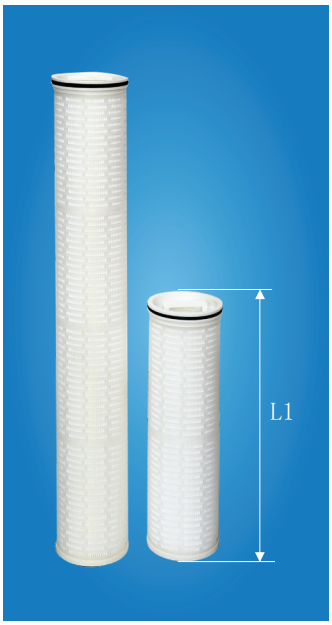

型号 Type	材质 Material	尺寸 Size(mm)	滤芯高度 L1(mm)	进出水高度 L2(mm)	进出水口 In/Out(mm)	最大工作压力 Max pressure	参考流量 Reference flow (T/H)
PF20-C	PP/PVDF	Ø225-H1110	525	596±3	法兰FLG: DN50/ANSI2" DN80/ANSI3"	PP:0.8MPA(116PSI) PVDF:1.0MPA(150PSI)	10-15
PF40-C		Ø225-H1590	1015	1078±3			20-25

Note:

桶体内放置大通量滤芯1只；标配PP隔膜压力表及取样阀。

It can install high flow cartridge one PCS.The standard spec includes： PP diaphragm pressure gauges and sampling valve.

CE certificate

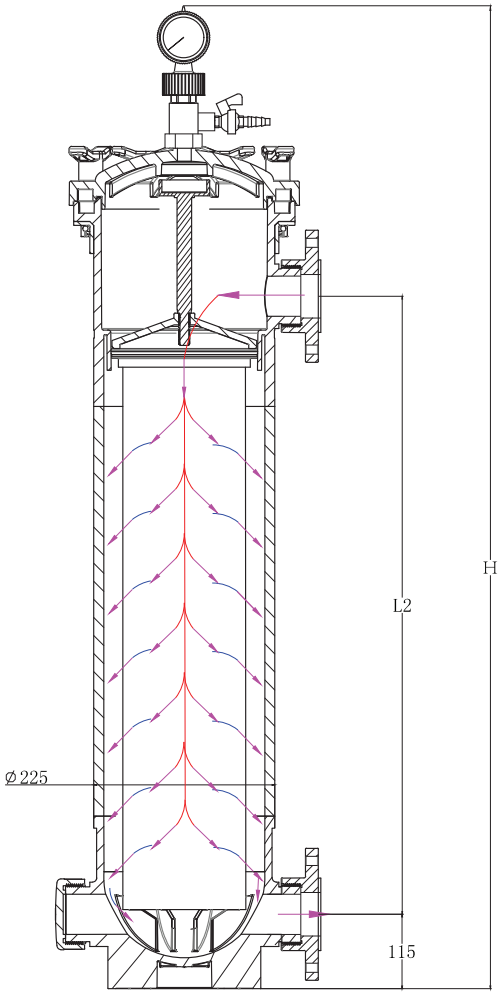

水流示意图
Flow Diagram

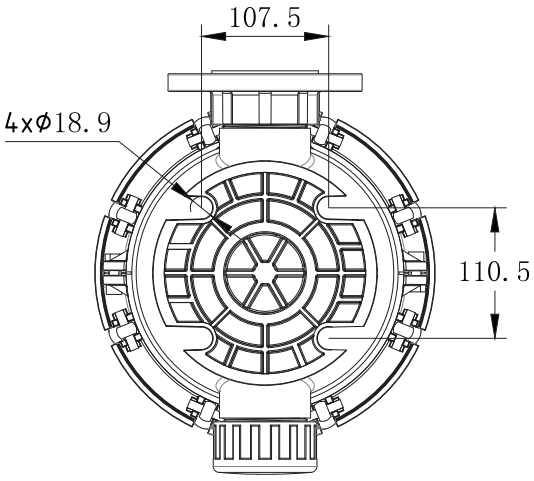

底座定位图
Pedestal Location

产品优势/Product Merits

1、耐压高：PP材质过滤器耐压为0.8MPA;PVDF材质过滤器耐压为1.0MPA；
2、耐温高：PP材质过滤器耐温可达65℃;PVDF材质过滤器耐温可达100℃；
3、耐腐蚀，耐酸碱，耐有机溶剂，可用于化工，电镀等领域；
4、过滤精度高，过滤范围为0.5-200微米；
5、安装拆卸方便。

1、High pressure: PP material filter pressure is 0.8 MPa; PVDF material filter pressure is 1.0 MPa;
2、High temperature resistance: PP material filter temperature resistance up to 65 ℃, PVDF material filter temperature resistance up to 100 ℃;
3、Corrosion resistance, acid and alkali resistance, organic solvent resistance, Chemical industry, electroplating and other fields;
4、High precision, the filter range can be from 0.5~200um.
5、Easy to install and disassemble.

CE certificate

HXP全塑袋式过滤系统是一种新型的过滤系统，具有过滤精度高，处理量大，使用、维护方便 等特点。因此可广泛应用于污水处理，中水回用，酸碱液体过滤，农业灌溉，泳池等领域。

HXP bag filter system is a new filter system. It is character with high precision, big flow, easy installation and maintenance. So it can be widely used in Sewage treatment, reclaimed water reuse, acid-base liquid filtration, agricultural irrigation, swimming pool and other fields.



本产品获得国家实用新型专利证书，专利号为：ZL201821245100.0

获得国家发明专利证书，专利号为：200710164500. 9

已通过0-0.6MPa的10万次循环疲劳测试。

It has got the utility model patent, the patent N0 is: ZL201821245100.0

It has got the patent of invention.the patent NO is: 200710164500.9

It has achieved 0-0.6 MPa 100, 000 times recycle fatigue test successfully.



A系列顶盖用扳手

Spanner for the lid of A series

型号 Type	材质 Material	尺寸 Size(mm)	滤袋尺寸 Bag size	进出水口 In/out	进水口高度 L	最大工作压力 Max pressure	参考流量 Reference flow (T/H)
HXP-BF-1-1-A	UPVC	Q225-H805	Q"(178mm)-H17"(419mm)	法兰FLG: DN50/ANS12”	650	A=0.4MPA	10-15
HXP-BF-1-2-A		Q225-H1190	Q"(178mm)-H32"(813mm)		1035		15-20
HXP-BF-1-1-B		Q225-H820	Q"(178mm)-H17"(419mm)		685	B=0.7MPA	10-15
HXP-BF-1-2-B		Q225-H1200	Q"(178mm)-H32"(813mm)		1065		15-20

Note:

桶体内安装各种材质各种精度滤袋1只；

最高温度：45℃，排气孔、压力表安装孔螺纹尺寸为;G1/4"配公制压力表需要订购转接头。

若订购PP隔膜压力表，请在下单时告知。

It can install all material, all precision’ s fiter bag lpcs
The highest of working temperature is 45 ℃,the size of the two holes in the lid of the filter is Gl /4"
If the thread of the pressure gauge is metric standard,should add an adaptor.
If the pressure gauge needs to be equipped with a PP diaphragm, please note clearly on the order.

CE certificate

工作原理

要过滤的物体从进料口流入，液体从滤袋内流向滤袋外，经过滤器下出口流入指定容器内，滤除的颗粒杂质被拦截在滤袋中，确保更换滤袋时不致污染下流液体，滤袋更换后可继续使用。

Operate Element

The liquid which will be purged should be poured into the bag filter from the inlet, then the liquid flow from the inner surface of the bag to the outer surface. At last, it will be come into the appointed tank. On reverse, the impurity will be held up in the bag. The filter can be recycled when changed another new bag.

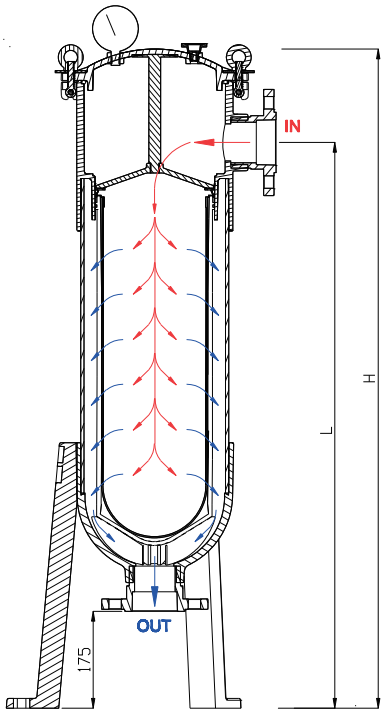

水流示意图　Flow Diagram

产品优势/Product Merits

1、UPVC 材质的过滤容器耐腐蚀性强;
2、独特的压板卡扣密封装置，使系统更加安全可靠;
3、采用独特的过滤设计技术，有效防止滤袋陷入滤篮内的可能，确保100%无溢漏;
4、结构紧凑，外表美观、安装操作简单、占地面积小;
5、过滤精度高，过滤范围为0. 5~200微米;
6、单位过滤面积的处理流量大，容污量大，过滤效率高;
7、与国外进口袋式过滤器相比，价格优势显著。

1、UPVC material has good corrosion resistant.
2、The unique seal system makes the filter more safety.
3、It can prevent the bag plunged into the support basket, no inner leak.
4、Good appearance and compact inner construct.
5、High precision, the filter range can be from 0.5~200um.
6、High efficiency of filter: quick flow of liquid, big capacity of impurity
7、The price is more competitive.

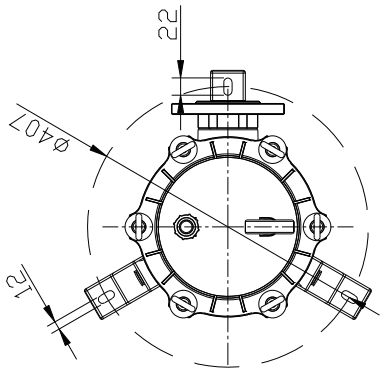

底座定位图
Pedestal Location

CE certificate

全塑袋式过滤系统是一种新型的过滤系统，具有过滤精度高，处理量大，使用、维护方便 等特点。因此可广泛应用于污水处理，中水回用，酸碱液体过滤，化工，电镀，泳池温泉水过滤等领域。

Bag filter system is a new filter system. It is character with high precision, big flow, easy installation and maintenance. So it can be widely used in sewage and wastewater reuse, Desalination, Brackish Water ， Acid and alkali liquid filtration， Chemical industry, electroplating, swimming pool, hot spring water filtration and other fields.

- **专利产品** Patented product
- **耐酸碱** Acid & alkai resistant
- **耐高温** Hight temperature resistant
- **耐有机溶剂** Organic solvents resistance

本产品获得国家实用新型专利证书，专利号为：ZL201821245393. 2
已通过0-0.8Mpa打10万次循环疲劳测试。

It has got the utility model patent,which is issued by the state intellectual property office of the P.R.C. The patent NO is: ZL201821245393. 2
It has achieved 0-0.8 MPa 100,000 times recycle fatigue test successfully.



型号 Type	材质 Material	尺寸 Size(mm)	滤袋尺寸 Bag size	进出水高度 L2(mm)	进出水口 In/Out(mm)	最大工作压力 Max pressure	参考流量 Reference flow (T/H)
HXP-BF-C-1-PP	PP	Ø225-H900	Q"(178mm)-H17"(419mm)	387	法兰FLG: DN50/ ANSI2" DN80/ ANSI3"	0.8MPA (116PSI)	10-15
HXP-BF-C-2-PP		Ø225-H1270	Q"(178mm)-H32"(813mm)	757			20-25
HXP-BF-C-1-PVDF	PVDF	Ø225-H900	Q"(178mm)-H17"(419mm)	387		1.0MPA (150PSI)	10-15
HXP-BF-C-2-PVDF		Ø225-H1270	Q"(178mm)-H32"(813mm)	757			20-25

Note:
桶体内安装各种材质各种精度滤袋1只；标配PP隔膜压力表及取样阀。
It can install all material, all precision' s fiter bag 1 pcs .The standard spec includes: PP diaphragm pressure gauges and sampling valve.

CE certificate

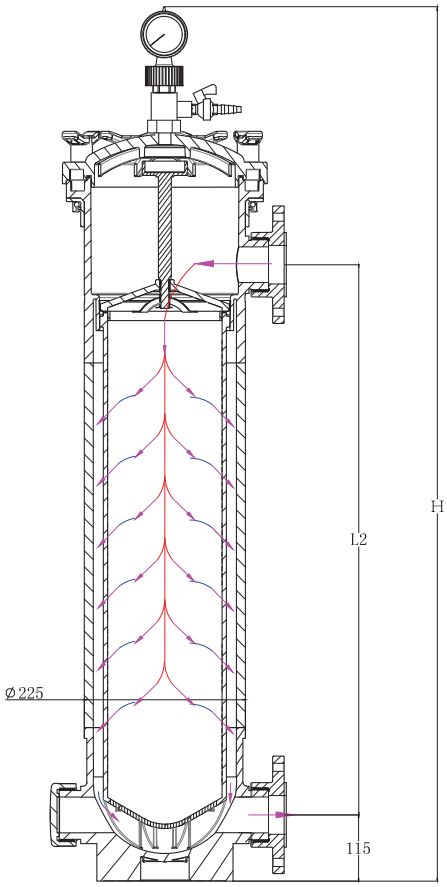

水流示意图
Flow Diagram

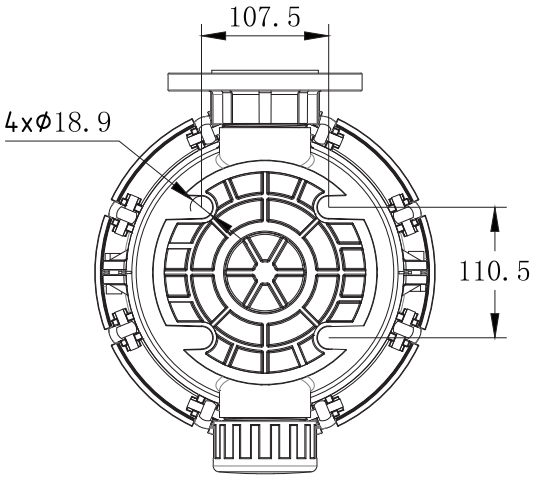

底座定位图
Pedestal Location

产品优势/Product Merits

1、耐压高：PP材质过滤器耐压为0.8MPA;PVDF材质过滤器耐压为1.0MPA；
2、耐温高：PP材质过滤器耐温可达65℃;PVDF材质过滤器耐温可达100℃；
3、耐腐蚀，耐酸碱，耐有机溶剂，可用于化工，电镀等领域；
4、过滤精度高，过滤范围为0.5-200微米；
5、安装拆卸方便。

1、High pressure: PP material filter pressure is 0.8 MPa; PVDF material filter pressure is 1.0 MPa;
2、High temperature resistance: PP material filter temperature resistance up to 65 ℃, PVDF material filter temperature resistance up to 100 ℃;
3、Corrosion resistance, acid and alkali resistance, organic solvent resistance, Chemical industry, electroplating and other fields;
4、High precision, the filter range can be from 0.5~200um.
5、Easy to install and disassemble.

CE certificate



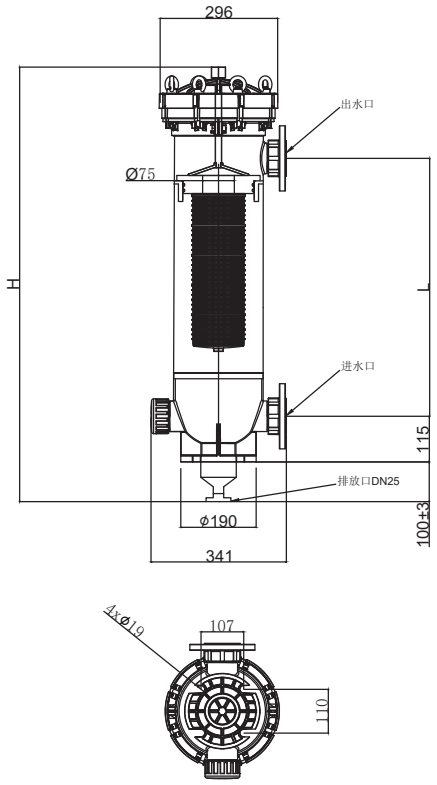

树脂捕捉器主要就是在离子交换器等装有树脂的设备出口的水系统管路上，当水帽或者布水器破损导致树脂泄漏时，可以被滤网拦截捕捉，以免影响下游系统。

PP材质树脂捕捉器，耐酸碱，耐腐蚀，耐高温，可以用在软化水，发酵行业，化工行业，盐湖提锂等行业。

The Resin Trap is mainly installed on the water system pipeline at the outlet of equipment containing resin such as ion exchangers. When the nozzle or the water distributor are damaged, resulting in the leakage of resin passing through, it can be intercepted and captured by the Resin Trap to avoid affecting the downstream system.

The Resin Trap is made of Polypropylene（PP）, can be acid and alkali resistant, corrosion resistant, high temperature resistant, usually used in industries such as softened water, fermentation industry, chemical industry,the Extraction of Lithium from the Salt Lake Brine etc.

型号 Type	材质 Material	尺寸 Size(mm)	进出水高度 L(mm)	进出水口 In/Out(mm)	排污口 Drainer(mm)	最大工作压力 Max pressure	参考流量 Reference flow (T/H)
HPRT-50	PP	Ø225-H950	500	法兰FLG: DN50	法兰FLG: DN25	0.8MPA (116PSI)	10-20
HPRT-80		Ø225-H1110	650	法兰FLG: DN80			20-40

Note：
过滤精度（**Filtration precision**）≤**0.25mm**；也可按需定制过滤精度。

树脂捕捉器 /Resign Trap

CE certificate





树脂捕捉器主要就是在离子交换器等装有树脂的设备出口的水系统管路上，当水帽或者布水器破损导致树脂泄漏时，可以被滤网拦截捕捉，以免影响下游系统。

PP/PVC-U/PVC-C 耐酸碱，耐腐蚀，耐高温，可以用在软化水，发酵行业，化工行业，盐湖提锂等行业。

The Resin Trap is mainly installed on the water system pipeline at the outlet of equipment containing resin such as ion exchangers. When the nozzle or the water distributor are damaged, resulting in the leakage of resin passing through, it can be intercepted and captured by the Resin Trap to avoid affecting the downstream system.

The Resin Trap is made of Polypropylene（PP）/ PVC-U / PVC-C, can be acid and alkali resistant, corrosion resistant, high temperature resistant, usually used in industries such as softened water, fermentation industry, chemical industry,the Extraction of Lithium from the Salt Lake Brine etc.

型号 Type	材质 Material	进出水口 In/Out(mm)	最大工作压力 Max pressure	参考流量 Reference flow (T/H)
HPRT-2	PPH / PVC-U / PVC-C	法兰FLG:DN50/ANSI 2″	0.8Mpa (116PSI)	10-20
HPRT-3		法兰FLG:DN80/ANSI 3″		20-40
HPRT-4		法兰FLG:DN100/ANSI 4″		40-60
HPRT-5		法兰FLG:DN125/ANSI 5″		60-80

Note：

过滤精度（**Filtration precision**）≤**0.25mm**；也可按需定制过滤精度。

大流量滤芯过滤器 /High flow cartridge filter

CE certificate

产品优势/Product Merits

◆更高的设计强度标准，通过 0.6Mpa，10 万次疲劳强度验证；

Higher design strength standard,through 0.6MPA,100,000 fatigue strength verification.

◆安装维保更为方便，设有多个排污取压接口选择；

More convenient to install and maintenance,multiple choice of drain and discharge pressure interface.

◆价格更具竞争力，尤其对大型海淡和废水回用项目；

Price is more competitive,especially for large sea water desalination and waste water reuse projects.

◆优越的抗腐蚀性能，过流部件全部采用 UPVC /CPVC 制造；

Superior anti-corrosion performance,flow passage components are all made by UPVC/CPVC.

◆大流量滤芯过滤器适用 20 ",40 ",60" 大通量折叠滤芯；

20",40",60"large flux folding filter element is suitable for this housing.

◆端盖采用抱箍快接的形式，拆卸方便，更换 滤芯快捷方便；

The end cover adopts the form of quick couping,easy to remove and replace the filter element.

◆进出水口跟壳体是一体式，对比玻璃钢过滤器，玻璃钢过滤器进出水口采用塑料接头， 与壳体连接采用机械密封，存在漏水的风险；

The inlet & outlet and the shell are integrated.Compared with the FRP filter, which inlet and outlet are made of plastic connector,and the mechanical seal is used for the connection of the shell,there will be a risk of leakage.

应用领域/ Application field

◆苦咸水，海水淡化 / Brackish water,sea water desalination

◆瓶装水，纯水制造 / Bottled water,pure water production

◆废水，污水再回用 / Waste water,sewage reuse

◆循环冷却水回用 / Circulating cooling water reuse

◆腐蚀性液体过滤 / Corrosive liquid filtration

◆泳池，水族馆过滤 / Pool,aquarium filtration

◆农艺花卉滴灌水过滤 / Agricultural flower drip irrigation water filtration



CE certificate

大流量滤芯壳体/High flow cartridge filter housing

外壳特点/Features

进出水口（In/Out）	3"/4"/6" 拷贝令接口（3"/4"/6"Victaulic）
排气口（Vent）/ 排污口（Drain）	1/4" 内螺纹（1/4"Female）
顶盖安装方式（End cover installation）	快接抱箍（Quick coupling）

材质/Material

壳体材质（Body）	UPVC
包箍（Quick coupling）	SS304
密封圈（O-Ring）	EPDM

设计参数/Design parameters

最大工作压力（Max working pressure）	6bar
测试压力（Hydraulic test pressure）	15bar
最高工作温度（Max working temperature）	45℃
疲劳测试（Life test）	100,000cycles from 0 to 6bar
PH 值（PH）	2-12

型号（Type）	工作流量（Flowrate）（M^3/H）	进 / 出口（In/Out）	外形尺寸（Dimension）（mm）	滤芯长度（Length）	滤芯数量（Qty of element）
HPCF-HPF20	10-20	3" /3"	375x985	20"	1
HPCF-HPF40	20-40	3" /3" 4" /4" 6" /6"	375x1475	40"	1
HPCF-HPF60	30-60		375x1985	60"	1

N1-HPCF-HPF(3)(进出水口 In/Out:3″)



HPCF-HPF(4)(进出水口 In/Out:4″)



N2-HPCF-HPF(3)(进出水口 In/Out:3″)



HPCF-HPF(6)(进出水口 In/Out:6″)



CE certificate

大流量滤芯过滤器标准装置/High flow Skid package units

模块化产品特点/Modular features

◆标准模块化设计；不同的流量设计可以任意组合

Standard modular design;different flow design can be combined arbitrarily

◆实现大流量的同时，减小占地面积

High flow rate, small footprint

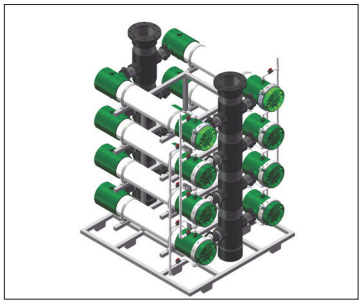

【HPCF-HPF40×8】

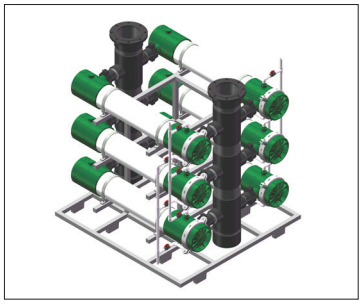

【HPCF-HPF40×6】
【HPCF-HPF60×6】

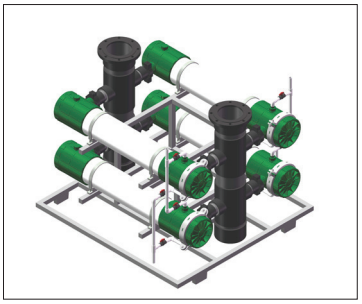

【HPCF-HPF40×4】
【HPCF-HPF60×4】



【HPCF-HPF40(4)×4】
【HPCF-HPF60(4)×4】



【HPCF-HPF40(6)×6】
【HPCF-HPF60(6)×6】

型号（Type）	工作流量（Flowrate）（M^3/H）	进 / 出口 (In/Out)	滤芯长度 (Length)	滤芯数量（Qty of element）
HPCF-HPF40（3）X4	80-160	DN200	40"	4
HPCF-HPF40（3）X6	120-240	DN200	40"	6
HPCF-HPF40（3）X8	160-320	DN250	40"	8
HPCF-HPF60（3）X2	60-120	DN150	60"	2
HPCF-HPF60（3）X3	90-180	DN200	60"	3
HPCF-HPF60（3）X4	120-240	DN200	60"	4
HPCF-HPF60（3）X6	180-360	DN300	60"	6
HPCF-HPF40（4）X4	80-160	DN200	40"	4
HPCF-HPF60（4）X4	120-240	DN200	60"	4
HPCF-HPF40（6）X6	120-240	DN200	40"	6
HPCF-HPF60（6）X6	180-360	DN300	60"	6

CE certificate

大流量折叠滤芯/High flow pleated filtration cartridge

产品特点 /Product features

◆更强的抗压能力 / Higher anti-pressure ability
◆更大的流量 / Higher flow rate
◆更大的过滤面积 / Bigger filtration area
◆更高的负载能力 / Higher load capacity
◆改进的流量分配 / Improved flow distribution
◆更强的抗污能力 / Higher dirty holding capacity
◆寿命长 / Longer life



材质（Material）	PP
长度（Length）	20"、40"、60"
直径（Outer diameter）	165mm
过滤形式（Filter form）	内压式（Internal pressure） 外压式（External pressure）
过滤精度（Micron）	0.5μm 1μm 5μm 10μm 20μm 50μm 100μm
密封圈材质（Sealing material）	硅胶（Silicon） 三元乙丙（EPDM） 氟橡胶（Viton）
技术性能（Performance）	最高工作温度：80℃ （Maximum operating temperature: 80 °C）
	最大工作压差：3.0bar@21℃ Maximum working pressure difference: 3.0 bar @ 21 °C

流量特性/Flow characteristic

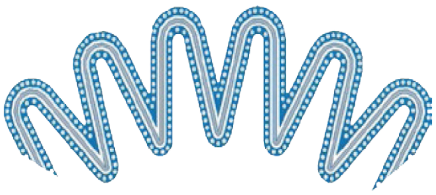

折叠式五层过滤系统
5 Layers filtration system

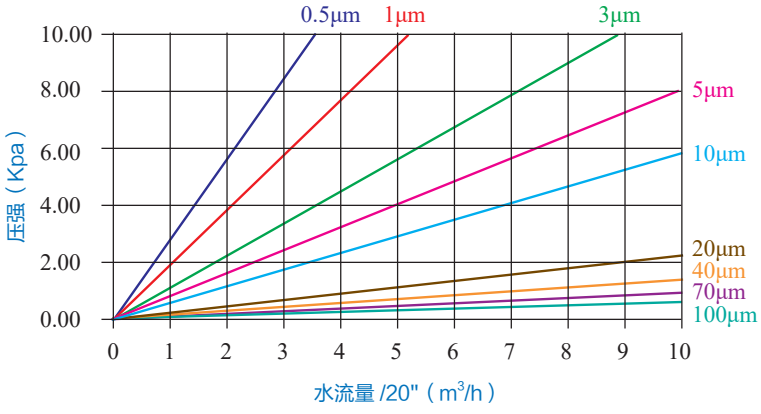

CE certificate

耐腐蚀，高性价/Corrosion resistance, Cost effective

TBF®管式可反洗过滤组件采用全塑结构设计，特别适用于中等腐蚀性液体的固液分离过程，多种不同精度的滤芯，由于其可拆可反洗的重复使用的特点，在常规滤芯和袋式过滤器受限应用场合发挥独特的作用，并具有更低的运行成本，多台组件并联集成系统可灵活满足不同大流量的要求;PLC程序控制能实现逐个组件在线或离线反洗的同时，其他在线的组件同时连续工作，无需整套备用，大大地节省投资成本;

TBF®Tubular Backwash Filter Components adopt all plastic materials, especially suit for moderately corrosive liquid solid-liquid separation process. Filter element with different precision., due to its repeated-use characteristics of detachable and backwashing, it can play a unique role in the limited application field of the conventional filter and bag filter, and has lower running costs. Multi-component parallel integration system can be flexible to meet the requirements of the different mass flow; PLC program control can realize one by one component online or offline, while other online components work continuously without the whole set of backup, which greatly save the investment cost;

应用领域/applications

◆河水、井水和海水除砂过滤; /river water, well water and sea water;

◆膜过程系统的预过滤; /pre filtration of membrane process system;

◆工业盐水、碱水的精制过滤； /industrial salt, caustic soda refining filtration;

◆树脂碎片及活性炭粉末的去除; / remove the resin debris and the activated carbon powder;

◆弱酸弱碱腐蚀液体的固液分离; /solid-liquid separate of the weak acid and weak base corrosion liquid;

◆纸浆白水及含纤维废水的过滤; /filter the pulp white water and wastewater containing fiber;

◆洗煤废水及洗车废水的回用; /reuse the coal washing wastewater and washing wastewater;

◆循环冷却水过滤; /filter the circulation cooling water;

◆精密滤芯和袋式过滤器的预过滤; / pre-filter of the cartridge filter and bag filter;

◆休闲水处理（尤其是海水）; /water treatment of the leisure water(especially the sea water);

CE certificate

TBF®管式可反洗组件性能参数 /The performance parameters

型号（Type）	过滤精度 Filtration precision (um)	网袋材质 Mesh bag material	备注 Remark
TBF7-50P	50	聚酯 polyester	★应用温度 (applicationtemperature): 5-45℃; ★最大压差 (maximumdifferential pressure):0.02Mpa; ★最大进液含固量 (maximum solid content of the inlet liquid): 500ppm; ★聚酯适用于弱酸性，尼龙适用于弱碱性液体 :polyester is applicable to weak acid, nylon is suitable for the weak alkaline liquid;
TBF7-50N	50	尼龙 nylon	
TBF7-100P	100	聚酯 polyester	
TBF7-100N	100	尼龙 nylon	
TBF7-150P	150	聚酯 polyester	
TBF7-150N	150	尼龙 nylon	
TBF7-200P	200	聚酯 polyester	
TBF7-200N	200	尼龙 nylon	
TBF7-250	250	PVC 绕丝管 Sonic-welded screen	
TBF7-300	300		
TBF7-400	400		
TBF7-500	500		
TBF7-600	600		
TBF7-800	800		
TBF7-1000	1000		

TBF®7过滤组件安装尺寸/Installation dimensions(mm)



