ZenithPura

苏州新鼎汇环保科技有限公司

SUZHOU XINDINGHUI ENVIRONMENTAL PROTECTION TECHNOLOGY CO., LTD.

地址：江苏省苏州市相城区元和街道宣公路588号元和塘科技文化研发社区1号楼5楼550室

ADD: Room 550, 5th Floor, Building 1, Yuanhetang Science and Technology Culture R&D Community, No. 588 Xuangong Road, Yuanhe Street, Xiangcheng District, Suzhou City, Jiangsu Province

TEL: +86 13913135613　E-mail：sunny@zenithpura.com　www.zenithpura.com

GLA100



TYPICAL APPLICATIONS

- Made of high-quality polypropylene material, strong and durable;
- Resistance to chemical attack;
- With a unique compact structure, easy handling and installation;
- Cartridge type both in disc and screen connection sizes: 3/4", 1", 1.5", 2";
- A cap threaded on at the auxiliary connection easy for the discharge of waste and pressure reduction;
- Reserved two connections for pressure gauge installation.

Filtration System Easy installation Strong & durable



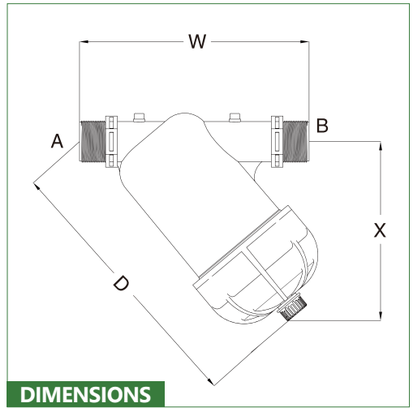

DIMENSIONS



1. DISC



2. SCREEN



FILTRATION ELEMENT

Housing Material	Filter element Material
Modified PP	Disc: PP
Modified PP	Screen: S.S.304

PRODUCT SIZE TABLE

Connection	Max Flow Rate (m^3/h)		Filtration surface (cm^2)		Working pressure (Bar)
	Disc	Screen	Disc	Screen	
3/4"	4	5	152	126	8
1"	5	6	152	126	8
1-1/2"	12	14	206	180	8
2"	22	24	362	328	8

HEAD LOSS (KG/CM2)-130 MM/120MESH

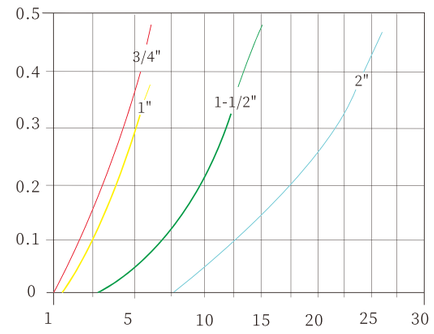

GLA100 Disc Flowrate (m^3/h)

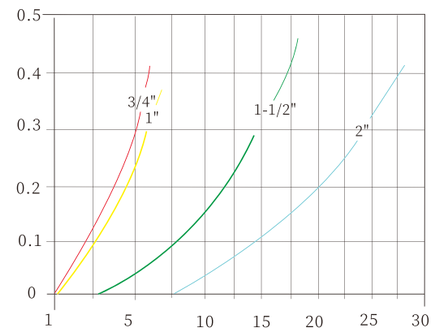

GLA100 Screen Flowrate (m^3/h)

PRODUCT SIZE TABLE

Item No.	Connection Size		Size			Weight(g)
	A	B	W	X	D	
G100D20NB130	3/4"BSP	3/4"BSP	167	150	223	290
G100D25NB130	1"BSP	1"BSP	167	150	223	300
G100D40SB130	1.1/2"BSP	1.1/2"BSP	264	206	312	1160
G100D50NB130	2"BSP	2"BSP	264	206	312	1210
G100S20NB120	3/4"BSP	3/4"BSP	167	150	223	230
G100S25NB120	1"BSP	1"BSP	167	150	223	230
G100S40SB120	1.1/2"BSP	1.1/2"BSP	264	206	312	830
G100S50NB120	2"BSP	2"BSP	264	206	312	860

- NPT Thread available

Water Filters

GLA200



TYPICAL APPLICATIONS

- Made of high-quality polypropylene material, strong and durable;
- The hydraulic design of the filter minimizes head loss, saving energy and optimizing its performance;
- The system permits a wide range of flow rates and configurations using minimal components;
- Innovative disc design with depth filter traps retains a large amount of impurity;
- Various types of connections available: BSP VIC and Flange;
- Auxiliary connection for drain & pressure release; Resistance to chemical attack;
- Reserved two connections for pressure gauge installation;
- No tools are needed for maintenance and installation.

Filtration System Easy installation Strong & durable



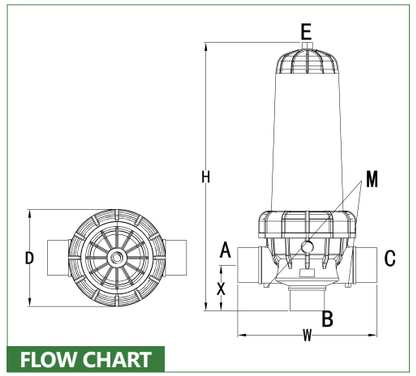

FLOW CHART



1. TWO FILTERS CAN BE SPLICED TOGETHER



GLA200 MATERIAL

Housing	|	Modified PP
Disc	|	Modified PP
Thread Cap	|	Reinforced PA6
Sealing element	|	NBR

PRODUCT SIZE TABLE

ITEM NO.	Max Flow Rate (m^3/h)	Filtration surface (cm^2)	Working pressure (Bar)
G200D50NB	25	1060	10
G200D50SB	30	1680	10
G200D80CB	30	1060	10
G200D80NB	40	1680	10
G200D80DNB	50	2120	10
G200D80DSB	60	3360	10

G200 DISC HEAD LOSS(130 MICRON)

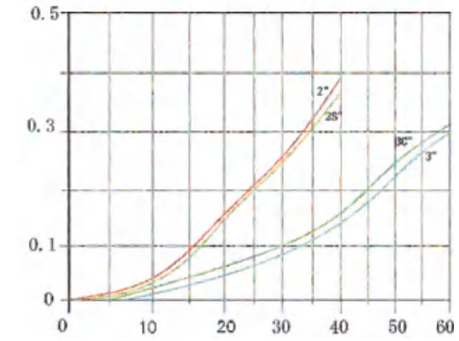

Head Loss (Bar) Flowrate (m^3/h)



PRODUCT SIZE TABLE

Item No.	Connection Size					Size				Weight (kg)
	A	B	C	E	M	H	W	X	D	
G200D50NB	2"BSP	2"BSP	2"BSP	3/4"BSP	1/4"BSP	495	334	110	223	4.18
G200D50SB	2"BSP	2"BSP	2"BSP	3/4"BSP	1/4"BSP	643	334	110	223	5.38
G200D80CB	3"BSP	3"BSP	3"BSP	3/4"BSP	1/4"BSP	495	334	110	223	4.30
G200D80NB	3"BSP	3"BSP	3"BSP	3/4"BSP	1/4"BSP	643	334	110	223	5.44
G200D80DNB	3"BSP		3"BSP	3/4"BSP	3/4"BSP	773	334	114	223	7.60
G200D80DSB	3"BSP		3"BSP	3/4"BSP	3/4"BSP	1066	334	114	223	9.84

Water Filters

GLA300



TYPICAL APPLICATIONS

- Made of reinforced PA6 with glass fiber added, ultra strength and durability, extending service lifetime;
- The hydraulic design of the filter minimizes head loss saving energy and optimizing its performance;
- Resistance to chemical attack;
- The system permits a wide range of flow rates and configurations using minimal components;
- Various types of connections are available: BSP VIC and Flange.

Filtration System Easy installation Strong & durable

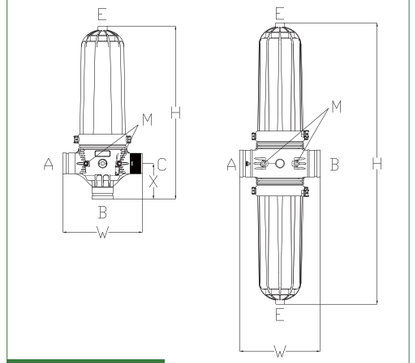

FLOW CHART



1. DISC

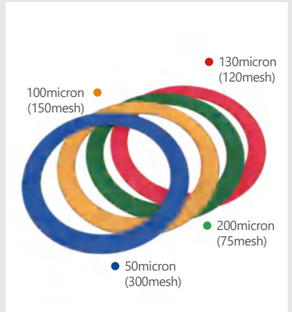

2. COLOR



FILTRATION ELEMENT

Housing:	Reinforced PA6	**Disc:**	Modified PP
S.S.Clamp:	S.S.304	**Sealing:**	NBR

PRODUCT SIZE TABLE

ITEM NO.	Max Flow Rate (m^3/h)	Filtration surface (cm^2)	Working pressure (Bar)
G300D50NB	30	1220	10
G300D50SB	40	1380	10
G300D80CB	40	1220	10
G300D80NB	50	1730	10
G300D80DNM	60	3460	10
G300D80DSM	80	3460	10
G300D100DNM	70	3460	10
G300D100DSM	100	3460	10



G300 DISC HEAD LOSS(130 MICRON)

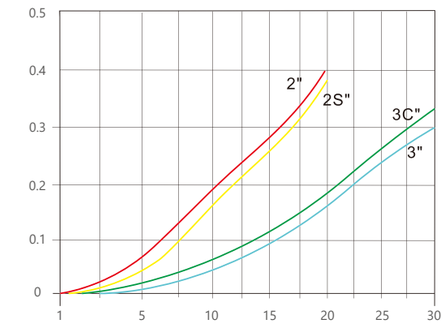

GLA100 Disc Flowrate (m^3/h)

PRODUCT SIZE TABLE

Item No.	Connection Size			Size					Weight (kg)
	A	B	C	E	M	H	W	X	
G300D50NB	2"BSP	2"BSP	2"BSP	3/4"BSP	1/4"BSP	599	310	134	6.58
G300D50NN	2"NPT	2"NPT	2"NPT						
G300D50NL	2"VIC	2"VIC	2"BSP						
G300D50NM	2"VIC	2"BSP	2"VIC						
G300D50SB	2"BSP	2"BSP	2"BSP	3/4"BSP	1/4"BSP	723	310	134	8.18
G300D50SN	2"NPT	2"NPT	2"NPT						
G300D50SL	2"VIC	2"VIC	2"BSP						
G300D50SM	2"VIC	2"BSP	2"VIC						
G300D80CB	3"BSP	3"BSP	3"BSP	3/4"BSP	1/4"BSP	605	337	148	6.74
G300D80CN	3"NPT	3"NPT	3"NPT						
G300D80CL	3"VIC	3"VIC	3"BSP						
G300D80CM	3"VIC	3"BSP	3"VIC						
G300D80NB	3"BSP	3"BSP	3"BSP	3/4"BSP	1/4"BSP	729	337	148	8.34
G300D80NN	3"NPT	3"NPT	3"NPT						
G300D80NL	3"VIC	3"VIC	3"BSP						
G300D80NM	3"VIC	3"BSP	3"VIC						
G300D80DNM	3"VIC	3"VIC	/	3/4"BSP	1/4"BSP	950	212	341	14.58
G300D80DSM	3"VIC	3"VIC	/						
G300D100DNM	4"VIC	4"VIC	/			1200			
G300D100DSM	4"VIC	4"VIC	/						

Water Filters

GLA600



TYPICAL APPLICATIONS

- Made of reinforced PA6 with glass fiber added , ultra strength and durability, extending service lifetime
- The hydraulic design of the filter minimizes the head loss
- Resistance to chemical attack
- The system permits a wide range of flow rates and configurations using a minimal components
- The Helix technology creates a centrifugal water flow driving big particles away from the cartridge increase the filtration efficiency while decrease the frequency of maintenance
- Innovative disc design with depth filter traps retains large amount ofimpurity.

Filtration System Easy installation Strong & durable

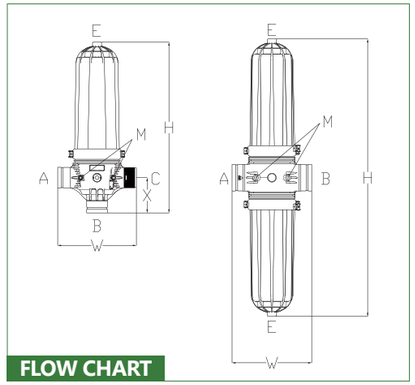

FLOW CHART



1. SPLICED TOGETHER 2. STACKED FILTER



GLA600 MATERIAL

Housing	|	Reinforced PA6 with glass fiber
Disc	|	Modified PP
S.S. Clamp	|	S.S.304
Sealing	|	NBR

PRODUCT SIZE TABLE

Automatic backwashfilter unit	Flow Rate	Filtration Surface	Max Pressure	Min Pressure
		Filtration Stage		Backwash Stage
	m^3/h	cm^2	Kg/cm^2	l/S
G600D50SL	25	1520	10	3
G600D80NL	30	1520	10	3
G600D80DSM	50	1520	10	3
G600D100DSM	60	3040	10	6



AUTOMATIC BACKWASH FILTER UNIT PERFORMANCE(130 MICRON)

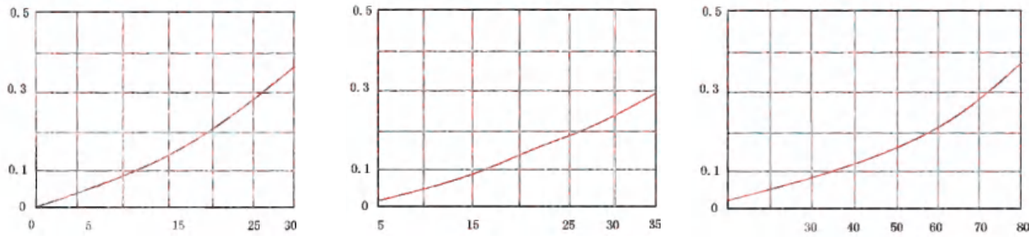

G50 Head Loss (Bar) Flowrate (m^3/h) G80 Head Loss (Bar) Flowrate (m^3/h) G100 Head Loss(Bar) Flowrate (m^3/h)

PRODUCT SIZE TABLE

Item No.	Connection Size			Size					Weight (kg)
	A	B	C	E	M	H	W	X	
G600D50SL	2"VIC	2"VIC	2"BSP	3/4"BSP	1/4"BSP	741	334	152	8.88
G600D80SL	3"VIC	3"VIC	3"BSP	3/4"BSP	1/4"BSP	741	334	152	8.80
G600D80DSM	3"VIC	3"VIC		3/4"BSP	1/4"BSP	1206	334	152	15.00
G600D100DSM	4"VIC	4"VIC		3/4"BSP	1/4"BSP	1206	334	152	15.76

Water Filters

GLS2000

TYPICAL APPLICATIONS

- Helix creates centrifugal action optimizes the filtration performance and reduce backwashfrequency and maintenance
- All components are made of high guality virgin materials,unique design guarantee an extendedife with high resistance
- Versatility and compatibility of filter permits system a wide range offlow and configurations.asytoinstaland maintenance
- A piston system to compact the filter elements allows for easy decompression of the disc stackduring backwash
- High efficiency filtration system and backflush system save the water and energy.



Filtration System Easy installation Strong & durable



MATERIAL

Parts	2S.3N.3DN.4DN
Housing	Reinforced PA6 with glass fiber added
Disc	PP
Sealing parts	Naturalrubber+S.S.304 Clamp
Cartridge Framework	Reinforced PA6 with glass fiber added
Piston part	Reinforced PA6 with glass fiber added

PRODUCT SIZE TABLE

ITEM NO.	Flow Rate (m^3/h)	Filtration surface (cm^2)	Backwash pressure(Bar)	Backwash flow rate.(S/L)
G600D50S	25	1520	2.8	3
G600D80N	30	1520	2.8	3
G600D100N	50	3040	2.8	6

FILTRATION GRADE

- 200 micron(75 mesh)
- 100 micron(150 mesh)
- 130 micron(120 mesh)
- 50 micron(300 mesh)

PRODUCT SIZE TABLE

ITEM NO.	Flow Rate (m^3/h)	Filtration surface (cm^2)	Max pressure (Bar)	Backwash flow rate.(S/L)
GLSH202-3F	30-50	3040	10	3
GLSH203-4F	60-75	4560	10	3
GLSH204-4F	80-100	6080	10	3
GLSH205-6F	100~125	7600	10	3



AUTOMATIC BACKWASH FILTER UNIT PERFORMANCE(130 MICRON)

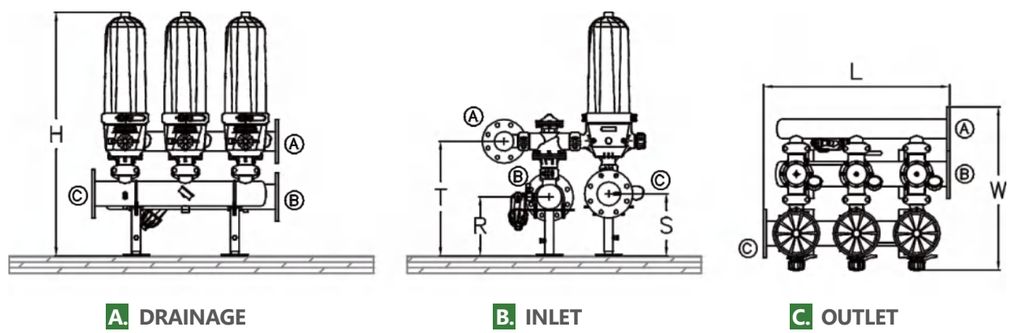

A. DRAINAGE B. INLET C. OUTLET

PRODUCT SIZE TABLE

Item No.	Description	Size					
		L	W	H	R	T	S
GLSH202-3F	2pcs of filter unit and 3" pipes	575	745	1087	256	498	270
GLSH203-4F	3pcs of filter unit and 4" pipes	850	745	1112	269	523	284
GLSH204-4F	4pcs of filter unit and 4" pipes	1125	745	1112	269	523	284
GLSH205-6F	5pcs of filter unit and 6" pipes	1400	773	1163	295	574	309

Water Filters

GLS3000

TYPICAL APPLICATIONS

- Helix creates centrifugal action optimizes the filtration performance and reduce backwashfrequency and maintenance
- All components are made of high guality virgin materials,unique design guarantee an extendedife with high resistance
- Versatility and compatibility of filter permits system a wide range offlow and configurations.asytoinstaland maintenance
- A piston system to compact the filter elements allows for easy decompression of the disc stackduring backwash
- High efficiency filtration system and backflush system save the water and energy.



Filtration System Easy installation Strong & durable





MATERIAL

Parts	2S.3N.3DN.4DN
Housing	Reinforced PA6 with glass fiber added
Disc	PP
Sealing parts	Naturalrubber+S.S.304 Clamp
Cartridge Framework	Reinforced PA6 with glass fiber added
Piston part	Reinforced PA6 with glass fiber added

PRODUCT SIZE TABLE

ITEM NO.	Flow Rate (m^3/h)	Filtration surface (cm^2)	Backwash pressure(Bar)	Backwash flow rate.(S/L)
G600D50S	25	1520	2.8	3
G600D80N	30	1520	2.8	3
G600D100N	50	3040	2.8	6

FILTRATION GRADE

- 200 micron(75 mesh)
- 100 micron(150 mesh)
- 130 micron(120 mesh)
- 50 micron(300 mesh)

PRODUCT SIZE TABLE

ITEM NO.	Flow Rate (m^3/h)	Filtration surface (cm^2)	Max pressure (Bar)	Backwash flow rate.(S/L)
GLSH303-6F	90~105	4560	10	3
GLSH304-6F	120~140	6080	10	3
GLSH305-6F	150~180	7600	10	3
GLSH306-6F	180-210	9552	10	3
GLSH307-8F	210~245	10640	10	3
GLSH308-8F	240~280	12160	10	3

AUTOMATIC BACKWASH FILTER UNIT PERFORMANCE(130 MICRON)

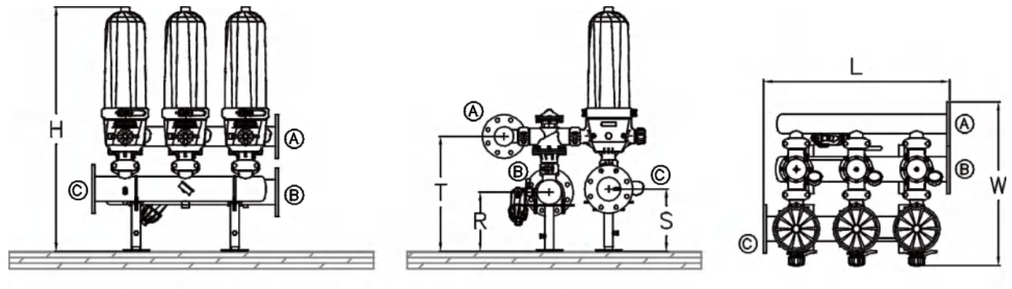

A. DRAINAGE B. INLET C. OUTLET

PRODUCT SIZE TABLE

Item No.	Description	Size					
		L	W	H	R	T	S
GLSH303-6F	3pcs of filter unit and 6" pipes	850	830	1205	295	616	337
GLSH304-6F	4pcs of filter unit and 6" pipes	1125	830	1205	295	616	337
GLSH305-6F	5pcs of filter unit and 6" pipes	1400	830	1205	295	616	337
GLSH306-8F	6pcs of filter unit and 8" pipes	1675	840	1259	322	670	364
GLSH307-8F	7pcs of filter unit and 8" pipes	1950	840	1259	322	670	364
GLSH308-8F	8pcs of filter unit and 8" pipes	2225	840	1259	322	670	364

Water Filters

GLS4000

TYPICAL APPLICATIONS

- Helix creates centrifugal action optimizes the filtration performance and reduce backwashfrequency and maintenance
- All components are made of high guality virgin materials,unique design guarantee an extendedife with high resistance
- Versatility and compatibility of filter permits system a wide range offlow and configurations.asytoinstaland maintenance
- A piston system to compact the filter elements allows for easy decompression of the disc stackduring backwash
- High efficiency filtration system and backflush system save the water and energy.



Filtration System Easy installation Strong & durable



MATERIAL

Parts	2S.3N.3DN.4DN
Housing	Reinforced PA6 with glass fiber added
Disc	PP
Sealing parts	Naturalrubber+S.S.304 Clamp
Cartridge Framework	Reinforced PA6 with glass fiber added
Piston part	Reinforced PA6 with glass fiber added

PRODUCT SIZE TABLE

ITEM NO.	Flow Rate (m^3/h)	Filtration surface (cm^2)	Backwash pressure(Bar)	Backwash flow rate.(S/L)
G600D50S	25	1520	2.8	3
G600D80N	30	1520	2.8	3
G600D100N	50	3040	2.8	6

FILTRATION GRADE

- 200 micron(75 mesh)
- 100 micron(150 mesh)
- 130 micron(120 mesh)
- 50 micron(300 mesh)

PRODUCT SIZE TABLE

ITEM NO.	Flow Rate (m^3/h)	Filtration surface (cm^2)	Max pressure (Bar)	Backwash flow rate.(S/L)
GLSH403-6F	150~180	9120	10	6
GLSH404-8F	200~240	12160	10	3
GLSH405-8F	250~300	15200	10	3
GLSH406-10F	300-360	18240	10	3
GLSH407-10F	350~420	21280	10	3
GLSH408-12F	400~480	24320	10	3
GLSH409-12F	450~540	27360	10	3
GLSH410-12F	500~600	30400	10	3



AUTOMATIC BACKWASH FILTER UNIT PERFORMANCE(130 MICRON)

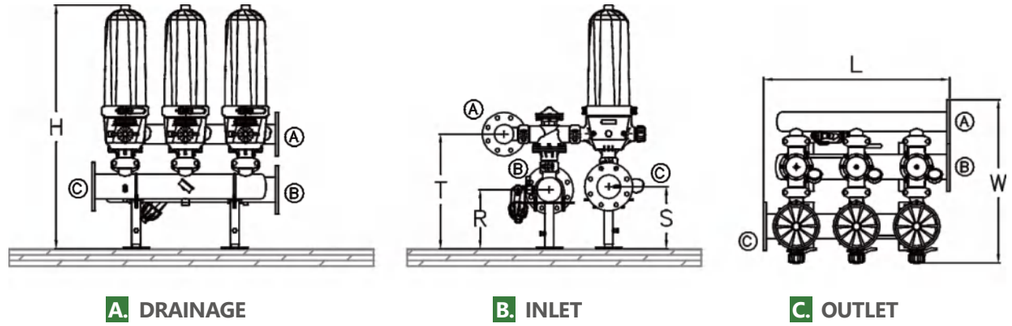

A. DRAINAGE B. INLET C. OUTLET

PRODUCT SIZE TABLE

Item No.	Description	Size					
		L	W	H	R	T	S
GLSH403-6F	3pcs of filter unit and 6" pipes	950	1200	1765	320	623	1266
GLSH404-8F	4pcs of filter unit and 8" pipes	1225	1200	1765	320	623	1266
GLSH405-8F	5pcs of filter unit and 8" pipes	1500	1200	1875	350	680	1350
GLSH406-10F	6pcs of filter unit and 10" pipes	1775	1200	1875	350	680	1350
GLSH407-10F	7pcs of filter unit and 10" pipes	2050	1200	1990	390	754	1442
GLSH408-12F	8pcs of filter unit and 12" pipes	2325	1200	1990	390	754	1442
GLSH409-12F	9pcs of filter unit and 12" pipes	2725	1200	2110	440	826	1546
GLSH410-12F	10pcs of filter unit and12" pipes	3000	1200	2110	440	826	1546